JPL Hardware Requirements Certification Review (HRCR)- Proto-Flight Model (PFM) Photometer Long Wavelength (PLW) Bolometer Detector Assembly (BDA)

10209800-1 S/N 014

SPIRE Element
Herschel Space Observatory Project

February 23, 2005

CONTENTS

	SECTION
Hardware Requirements Certification Review (HRCR) Form	**1**
Final Inspection Report (IR)	**2**
Issues	**3**
M. Herman 15 May 2003 memo (fasteners for vibe. tests)	
Top Level Assembly Drawings	**4**
ECRs / NCRs	**5**
HR-SP-JPL-ECR-003 (Spectrometer BDA envelope height)	
HR-SP-JPL-ECR-005 (Kapton Cable routing design error)	
HR-SP-JPL-NCR-006 (PMW and PSW focal position shift)	
Waivers	**6**
HR-SP-JPL-RFW-005 (Sine Vibe Omission)	
HR-SP-JPL-RFW-006 (Vibration Test Levels)	
Open Problem / Failure Reports (PFR)	**7**
This Hardware: (None)	
Similar Hardware: (None)	
Handling Documents	**8**
General / Unpacking	
Electronic	
Environmental Requirements Verification Matrix	**9**
Performance Data Matrix	**10**
Qualification Status	**11**
Connector Mate and Operation Logs	**12**
Mechanical & Electrical ICDs	**13**
Other Data	**14**
Detector Backshort Data	
Alignment Measurement Summary	
Feedhorn Data	
300mK Spectrometer Filter EIDP	

RAL EIDP Table Of Contents Vs. HRCR Contents

EIDP Section	EIDP	HRCR Box #	Comments/Notebook Section
1	Shipping Documents		Shipper and Final IR
2	Transportation, Packing, Handling & Integration Procedures	20	Section 8
3	Certificate of Conformance / Delivery Review Board MoM		HRCR form is the CofC
4	As Built Configuration Status List	1	
5	List of Waivers	16	Section 6
6	Copies of Waivers	16	Section 6
7	List of Non-Conformance Reports	17, 18	Section 5
8	Copies of Non-Conformance Reports	17, 18	
9	Cleanliness Statement	10	Final IR includes inspection for conformance with cleanliness requirement (particulates)
10	Operational Manual	20	
11	Top Level Drawings (inc. Family Tree)	14	Section 4
12	Interface Drawings	26	Section 13
13	Functional, Block & Mechanical Drawings	14	Section 4
14	Electrical Circuit Drawings		See Electrical Handling Doc.
15	Serialized Components List		In the build books – not shipped
16	Mass Properties/ Power Budget		Mass found in header of HRCR
17	Qualification Status List / Test Matrix	22	Qual. Report to be supplied later, Summary in Section 11
18	Test Reports		To be supplied later, Summaries in Sections 9 and 10
19	Open Work / Deferred Work / Open Tests	5	
20	Calibration Data		Section 10
21	Historical Record		Section 12
22	Manufacturing Logbook(s)	--	To be retained at JPL
23	Operating Time / Cycle Record	24	Section 12
24	Connector Mating Record	24	Section 12
25	Age Sensitive Items Record		NA for BDA
26	Pressure Vessels – History/Test Record		NA
27	Temporary Installation Record		Section 12
28	Reference List of EIDPs (Lower level)		300mK Filter EIDP - Section 14
29	Other Useful Information		Section 14

JPL Hardware Requirements Certification Review – SPIRE Element #D-31447

Assembly/Subsystem	PEM	Phone	Section	Date
SPIRE	Martin Herman	(818) 354-8541	386	23 February, 2005

Drawing/ Part No.	Dwg. Rev.	Nomenclature	Serial No.	Model	Type	Final IR No.	Mass (grams) As Meas. / Req.
10209800-1	B	Bolometer Detector Assembly	014	PFM	PLW	923809	602 g / 632 g

Check applicable answer and give necessary explanation in remarks column	Yes	No	N/A	Remarks	Data Attachments (Package Sec. #)	Signature Approval & Date
1. Are all drawings and specifications complete, approved, released and frozen?	X			Previous Hardware was CQM PLW. See difference list attached See Issues (section 3). See section 11 for detector performance matrix.	14. Latest Top Assembly Drawings ☒ Attached ☐ None (Sec. 4)	Cog E
2. Do the released drawings and specifications reflect all approved changes?	X				15. List of open ECRs ☒ Attached ☐ None (Sec. 5)	PEM
3. Is hardware identical to other hardware delivered? If no, provide difference list.		X			16. Waivers ☒ Attached ☐ None (Sec. 6)	QA Engineer
4 Does the hardware meet the requirement of its functional requirements, specifications, waivers and/or ICDs ? If no, provide difference list.	X				17. Open MRBs ☐ Attached ☒ None (N/A)	Environments/Reliability
5. Have all IR discrepancies and MRBs been dispositioned and agreed to by Engineering/ QA ?	X				18. Open P/FRs on this H/W ☐ Attached ☒ None (Sec. 7)	Mission Assurance Mgr.
6. Is complete as-built list information included in the build book?	X				19. Open P/FRs on similar H/W ☐ Attached ☒ None (Sec. 7)	Project
7. Have all required environmental tests & analyses been completed?	X				20. Handling Documents ☒ Attached ☐ None (Sec. 8)	PI
8. Is all required assembly and/or subsystem level functional testing complete?	X				21. Shortage List ☐ Attached ☒ None (N/A)	
9. Have all piece parts, processes and materials been approved by JPL?	X				22. Requirements Verification Matrix ☒ Attached ☐ None (Sec. 9)	
10. Does this hardware meet all contamination control requirements?	X				23. Qualification Status ☒ Attached ☐ None (Sec. 11)	
11. Are all required shipping containers, shipping procedures, and special handling procedures ready?	X				24. Connector Mate / Demate Log ☒ Attached ☐ None (Sec. 12)	
12. Is additional work required to bring this hardware to flight readiness?		X			25. Operation Log ☒ Attached ☐ None (Sec. 12)	
13. Is this hardware acceptable for flight ?	X				26. ICDs ☒ Attached ☐ None (Sec. 13)	

difference list:			
part	**previous hardware:**	**current hardware**	**notes:**
	10209800-1 CQM PLW SN 006	10209800-1 PFM PLW SN014	
10209860 suspension assy.	chamfered pullies per redlined dwg 5/2/03	Fullly rounded & polished pulleys per released dwgs	change on qual and subsequent units to address CQM PLW fraying
10209860 suspension assy.	prelim kevlar routing	final (Qual BDA type) kevlar routing	change on qual and subsequent units to address CQM PLW fraying
10209860 suspension assy.	no side screws into invar spacers	side spacer screws were used	screws had been eliminated in error when the vespel safety spacer was eliminated from the design.
10209890 middle ring assy (part of suspension)	suspension Ring-A is pinned to flexure mounting plate with both old pins and smaller new invar pins.	suspension Ring-A is pinned to flexure mounting plate only new invar pins.	Old pins were partially machined away after assembly in early suspension units. Final design used only the new pins.
10209860 suspension assy.	no epoxy on capstan-1	versamid epoxy at capstan-1 end of kevlar.	epoxy added to final design to strengthen tie-off at capstan-1

*** INSPECTION REPORT ***
Printed Copies are for Reference Only - Please check with PDMS for official version

IR Number
923809

Action
BROWSE

Status "IR & IRDI Initiated"

IR Instructions

REFERS TO:

Part Number	Dash Number	Revision	Latest Rev	Serial Number	Quantity
10209800-1	(with part number)	B	B	014	1

Nomenclature:	**BOLOMETER DETECTOR ARRAY**		
Prgm/Project:	HSO-PLANCK	Inspection Date:	20-SEP-2004
COGE:	WEILERT, MARK A.	ECO/ECI:	
QAE:	HUGHES, SCOTT P.	Reference Designator:	SPIRE
JPL/Mfr:	JPL	Lot No.:	
Type of Inspection:	Final-Ship	Insp. Std / Spec No.:	
Type of Item:	Flight	AIDS No.:	
Location:	JPL	Work Order No.:	
Manufacturer:	JPL	CAGE Code:	
Supplier:	JPL	Receipt No.:	
Parts received by:		Property / ID:	
Received date:		PO/CT No.:	
Qty Accepted:		Line No.:	
Qty Rejected:	0	Rel / Mod No.:	
QA Alert?		CAN Required?	
IMTE Code:	None	IMTE Number:	
IMTE Code No. 2:	None	IMTE Number No. 2:	
IMTE Code No. 3:	None	IMTE Number No. 3:	
IMTE Code No. 4:	None	IMTE Number No. 4:	
Orig Nomenclature:			

DISCREPANT ITEMS:

Item	Discrep Code	Qty	Zone	S/N	Description	Re-Work	Files

This IR has No Discrepant Items

Item	Disposition	Root Cause Code	Dispo Code	Disp. Appr.	Stamp Date

This IR has No Discrepant Items

Inspection Report Notes:

HARDWARE LISTED ABOVE HAS BEEN COMPLETED INSPECTIONS AND TESTING AND ACCEPTABLE TO DELIVER TO NEXT INTERGRATION RUTHERFORD APPLETON LABORATORY SPACE & SCIENCE TECHNOLOGY DEPT.
CHILTON, DIDCOT OXFORD, ENGLAND UNITED KINGDOM OX11 OQX ATTN: ERIC SAWYER PH#1235 44 6385

	Initiated by	Signed by COGE	Signed by QAE	Closed by
Number of Files Attached 0	Date	Date	Date	Date

Reserved by	Reserved on	Reason

Issues

PFM PSW BDA 10209800-1 S/N 014

Configuration / Processing:

Several ECRs related to this hardware have been incorporated into released drawings. These do not apply directly to the PLW BDA type, but they affect the same drawings. They are included for reference:

- The maximum height of 300 mK stage exceeds ICD drawing 10209721 allowed range by 1.0 mm due to changes in 300 mK filter stack thickness which were not incorporated into the drawing. See attached ECR: HR-SP-JPL-ECR-003 in section 5. This change has been incorporated into Rev-C of the ICD.

- A focus position shift caused by an internal mechanical interference fix was incorporated into ICD drawing 10209721 Rev C per HR-SP-JPL-NCR-006 (attached in in section 5).

- A pixel map modification was incorporated into electrical schematic 10209725 Rev C per HR-SP-JPL-ECR-005 (attached in section 5). This drawing revision also incorporated JPL ECR 1026751.

Environmental Test:

- Shake tests were performed with non-flight-like 8-32 mounting screws, instead of 6-32. See attached email regarding this issue: (M. Herman, 15 May 2003) -- *This same issue applied to the previous CQM-PLW and PFM-SLW BDAs.*

- Shake tests were performed in accordance with open waivers HR-SP-JPL-RFW-005 (Sine Vibration Omission) and HR-SP-JPL-RFW-006 (Vibration Test Levels). See Waiver List (section 6).

Date: Mon, 11 Aug 2003 16:34:04 -0700
From: Martin Herman <Martin.I.Herman@jpl.nasa.gov>
Subject: Waiver Request (vibration fastners)
X-Sender: miherman@pop.jpl.nasa.gov
To: Mark.A.Weilert@jpl.nasa.gov
Cc: Henry.Abakians@jpl.nasa.gov

Date: Thu, 15 May 2003 11:41:18 -0700
To: Matt Griffin <Matt.Griffin@astro.cf.ac.uk>, Eric Sawyer <e.c.sawyer@rl.ac.uk>, Chris Brockley-Blatt <cbb@mssl.ucl.ac.uk>, Berend Winter <bw@mssl.ucl.ac.uk>
From: Martin Herman <Martin.I.Herman@jpl.nasa.gov>
Subject: Waiver Request (vibration fastners)
Cc: Ben.A.Parvin@jpl.nasa.gov, Jamie Bock <jjb@astro.caltech.edu>, Gary Parks <Gary.S.Parks@jpl.nasa.gov>, kalyani@squid.jpl.nasa.gov
Bcc:
X-Attachments:

Dear Matt and SPIRE Team,

To refresh everyone's memory. We requested the following information:

What type of fasteners will be used in Europe to mount the BDA? In our ICD, 6-32 fasteners are called for. However, the current test hardware uses 8-32 fasteners. We are looking to be consistent with the flight implementation.

The answer (Thanks Chris) was 6-32. Our current test fixture uses 8-32 and we are getting ready for vibration testing of the CQM next week. Therefore, we had a mechanical engineer look into this issue. His (Paul MacNeal) response was:

> It will acceptable to use four #8-32 fasteners for the vibration tests at JPL. The reasons are....
>
> 1) The test fixture has already been built using #8-32 tapped holes,
> 2) The use of #6-32 fasteners torqued to full value should be able to resist over 200 G's of lateral force before allowing slippage, and therefore is not a critical component of the vibration test, and
> 3) The test is primarily performed to verify integrity of the flexures, braid, and other components, and not the interface fasteners.

Based on this information, we are requesting a waiver for the CQM PLW vibration and for future QM, CQM, PFM and FS tests. The change for future test is small, but the fiscal situation is extremely challenging and no technical risk to the program is evident with the existing approach.

Thanks,
Marty

14. ALTERNATE OR EQUIVALENT ITEMS MAY BE USED FOR THIS ITEM WITH PRIOR ENGINEERING APPROVAL.

13. SEAL SHIPPING CONTAINER USING ITEMS 28, LID, 30, SCREWS, 31, O-RING, AND ITEM 32, PLUG. TORQUE ITEM 30, SCREWS TO 1.9 N*M PLUS RUNNING TORQUE PER JPL SPEC ES517040. TORQUE ITEM 32, PLUG TO 7.3 N*M PLUS RUNNING TORQUE PER JPL SPEC ES517040.

12. SECURE FLEXURE RING OF ITEM 1 OR 2, TO ITEM 26, USING ITEM 29, NUTS. TIGHTEN NUTS HALF TURN PAST FINGER TIGHT.

11. INSTALL ITEMS 26, MOUNT, INTO ITEM 27, SHIPPING BASE. TORQUE TO 200 N*MM PLUS RUNNING TORQUE PER JPL SPEC ES517040.

10. FOR -7 CONFIGURATION, SECURE ITEM 39, UNION NUT, TO ITEM 35, MASS SIMULATOR USING ITEM 40, SET SCREW, AND ITEM 25 ADHESIVE. TORQUE TO 1.7-2.2 N*M PER JPL SPEC ES517040. SECURE ITEM 33, ACCELEROMETER, TO ITEM 39, UNION NUT AND TORQUE TO 1.7-2.2 N*M PER JPL SPEC ES517040.

9. FOR -6, -7 AND -9 CONFIGURATION, SECURE ITEM 10, OR 36, ACCELEROMETER MOUNT, OR ITEM 43, ACCELEROMETER SIMULATOR, TO ITEM 9 OR 35, MASS SIMULATOR USING ITEM 22, SCREW. TORQUE TO 200 N*MM PLUS RUNNING TORQUE PER JPL SPEC ES517040.

8. FOR -7 CONFIGURATION, SECURE ITEM 33, ACCELEROMETER, TO ITEM 36, ACCELEROMETER MOUNT. TORQUE ITEM 33, ACCELEROMETER, TO 1.7-2.2 N*M PER JPL SPEC ES517040. CONNECT ITEM 34, CABLE, TO ITEM 33, ACCELEROMETER.

7. FOR -6 CONFIGURATION, BOND ITEM 37, ACCELEROMETER, TO ITEM 10, ACCELEROMETER MOUNT, USING ITEM 25, EPOXY.

6. FOR ALL CONFIGURATIONS EXCEPT -6, -7, AND -9, INSTALL ITEM 17, SCREW, INTO ITEM 11 OR 49, CAN. TORQUE TO 425 N*MM PER JPL SPEC ES517040.

5. FOR ALL CONFIGURATIONS EXCEPT -6 AND -7, SECURE ITEM 11, 42, OR 49, CAN AND ITEM 45, LIGHT SEAL TO FLEXURE RING OF ITEM 1 OR 2, USING ITEM 24, SCREW, AND ITEM 21, SPRING WASHER. TORQUE TO 200 N*MM PER JPL SPEC ES517040.

4. FOR ALL CONFIGURATIONS EXCEPT -6, -7, -8, AND -9, SECURE ITEM 12, 13, 14, 15, OR 16, FILTER, TO ITEM 1 OR 2, USING ITEM 23 OR 48, SCREW, ITEM 19, NUT, AND ITEM 21, SPRING WASHER. TORQUE TO 200 N*MM PER JPL SPEC ES517040.

3. FOR ALL CONFIGURATIONS EXCEPT -6, -7, AND -9, BEND THERMAL STRAP ON ITEM 3, 4, 5, 6, 7, OR 8 AND FASTEN TO ITEM 1 OR 2. FOR -9 CONFIGURATION SECURE ITEM 44, THERMAL STRAP SIMULATOR IN PLACE OF THERMAL STRAP. USE ITEM 22, SCREW, AND ITEM 46, WASHER AND TORQUE TO 100 N*MM FOR TEMPORARY INSTALLATION ONLY.

2. SECURE ITEM 3, 4, 5, 6, 7, 8, 9, OR 35, TO ITEM 1 OR 2 USING ITEM 19, NUT. FOR ALL CONFIGURATIONS EXCEPT -6 AND -7, SECURE CONNECTOR BRACKET OF ITEM 3, 4, 5, 6, 7, 8, OR 41 TO FLEXURE RING OF ITEM 1 OR 2, USING ITEM 18, SCREW, AND ITEM 21, SPRING WASHER. TORQUE TO 200 N*MM PER JPL SPEC ES517040. SPOT BOND ITEM 19, NUT USING ITEM 25, EPOXY ON ALL CONFIGURATIONS EXCEPT -6 AND -7.

1. FOR CONFIGURATIONS -7 AND -9, SECURE ITEM 33, ACCELEROMETER, TO ITEM 35, MASS SIMULATOR, ROTATING CONNECTOR TO ALLOW CABLE TO EXIT TOWARD TOP OF MASS SIMULATOR. TORQUE ITEM 38, SET SCREW, AGAINST ITEM 33, ACCELEROMETER, TO 1.7-2.2 N*M PER JPL SPEC ES517040. CONNECT ITEM 34, CABLE, TO ITEM 33, ACCELEROMETER.

NOTES: UNLESS OTHERWISE SPECIFIED

16. FOR -2 AND -3 CONFIGURATIONS, SECURE CONNECTOR BRACKETS OF ITEM 5 OR 6, TO ITEM 49, CAN, USING ITEM 50, SCREW. TORQUE TO 180 N*MM PER JPL SPEC ES517040.

15. FOR CONFIGURATIONS EXCEPT -6, -7, AND -9, MARK AS SHOWN WITH ITEM 47, EPOXY INK, USE APPROPRIATE DASH NO., S/N, MODEL (CQM/PFM) AND TYPE (P/LW, S/LW, ETC.).

REVISIONS

LTR	ZONE	DESCRIPTION	CODE	DWN	CHK	STRUCT	MATL	THRM CONT			ENGR	DSGN SUPV	DATA MGT	RELEASE DATE
A		INITIAL RELEASE	B	SEE TITLE BLOCK									RGB	03/15/04
B		ADDED ITEM 51, ADDED VIEW SH4, MOVED VIEW FROM SH2 TO SH4	B											

PARTS LIST

-9	-8	-7	-6	-5	-4	-3	-2	-1	ITEM NO	REF DES	CAGE NO	PART OR IDENTIFYING NO	NOMENCLATURE OR DESCRIPTION	SPECIFICATION	MATERIAL OR NOTE	ZONE
						1	1		51			10209903-1	RING, SPACER			
						4	4		50			NA0070-016004	SCREW, MACHINE FLUSH HEAD	NA0070	A-286 CRES	
						1	1		49			10209805-2	CAN, LIGHT			
				6	6				48			NA0068A016012	SCREW, MACHINE PAN HEAD	NA0068	A-286 CRES	
	AR			AR	AR	AR	AR	AR	47				EPOXY INK, BLACK			
	2			2	2	2	2	2	46			ST12259-020	WASHER, COUNTERSUNK, LUBRICATED	ST12259	A-286 CRES	
	1			1	1	1	1	1	45			10209807-1	SEAL, LIGHT			
1									44			10209847-1	SIMULATOR, THERMAL STRAP			
1									43			10209744-1	MASS SIMULATOR, ACCELEROMETER			
1									42			10217688-1	CAN, LIGHT, STM			
1									41			10217680-1	DUMMY BOLOMETER			
		1							40		OE328	92313A829	SET SCREW, 10-32 UNF X 1/2"		MCMASTER CARR 14	
		1							39		OE328	90977A021	UNION NUT, 10-32 UNF		MCMASTER CARR 14	
1		1							38		OE328	92313A824	SET SCREW, 10-32 UNF X 3/16"		MCMASTER CARR 14	
			1						37				ACCELEROMETER, THREE AXIS			
		1							36			10209746-2	MOUNT, ACCELEROMETER			
1		1							35			10209745-2	MASS SIMULATOR			
1		3							34			6011 A10	CABLE, ACCELEROMETER		DYTRAN	
1		3							33			3031 B5	ACCELEROMETER, SINGLE AXIS		DYTRAN	
1	1	1	1	1	1	1	1	1	32		SE027	2 P50N	PLUG, O-RING		PARKER FLUID CONNECTORS 14	
1	1	1	1	1	1	1	1	1	31		OE328	9262K331	O-RING, 114.5mm ID X 3mm WIDTH		MCMASTER CARR 14	
8	8	8	8	8	8	8	8	8	30			MS5197-50	SCREW, #8-32 UNC X 1.25"	MS5197	14	
4	4	4	4	4	4	4	4	4	29			NA0034C040	NUT, SELF LOCKING, HEX EXTENDED WASHER, 1100 MPa	NA0034	A-286 CRES 14	
1	1	1	1	1	1	1	1	1	28			10209809-1	CONTAINER, SHIPPING, LID			
1	1	1	1	1	1	1	1	1	27			10209808-1	CONTAINER, SHIPPING, BASE			
4	4	4	4	4	4	4	4	4	26		OE328	9217K32	MOUNT, NATURAL RUBBER, SANDWICH, M4 X 0.7		MCMASTER CARR 14	
AR	AR	AR	AR	AR	AR	AR	AR	AR	25			EC 2216 A/B	EPOXY			
4				4	4	4	4	4	24			NA0069-016010	SCREW, CAP, SOCKET HEAD. FULL THREAD, 1100 MPa	NA0069	A-286 CRES	
						6	6	6	23			NA0068A016010	SCREW, MACHINE PAN HEAD	NA0068	A-286 CRES	
6	2	4	4	2	2	2	2	2	22			NA0069-020010	SCREW, CAP, SOCKET HEAD. FULL THREAD, 1100 MPa	NA0069	A-286 CRES	
20	20			20	20	20	20	20	21			B0187-010-S	BELLEVILLE SPRING WASHER			
									20							
4	4	4	4	6	6	6	6	6	19			934-A2 M1.6 X 0.35	NUT	DIN 934	A-286 CRES	
4	4			4	4	4	4	4	18			NA0069-016004	SCREW, CAP, SOCKET HEAD. FULL THREAD, 1100 MPa	NA0069	A-286 CRES	
	2			2	2	2	2	2	17			NA0069-040008	SCREW, CAP, SOCKET HEAD. FULL THREAD, 1100 MPa	NA0069	A-286 CRES	
				1					16			S/SW FILTER	S/SW FILTER			
					1				15			S/LW FILTER	S/LW FILTER			
						1			14			P/SW FILTER	P/SW FILTER			
							1		13			P/MW FILTER	P/MW FILTER			
								1	12			P/LW FILTER	P/LW FILTER			
	1			1	1			1	11			10209805-1	CAN, LIGHT			
			1						10			10209746-1	MOUNT, ACCELEROMETER			
			1						9			10209745-1	MASS SIMULATOR			
				1					8			10209850-1	DETECTOR ASSEMBLY, SPECTROMETER SHORT WAVE			
					1				7			10209840-1	DETECTOR ASSEMBLY, SPECTROMETER LONG WAVE			
						1			6			10209830-1	DETECTOR ASSEMBLY, PHOTOMETER SHORT WAVE			
							1		5			10209820-1	DETECTOR ASSEMBLY, PHOTOMETER MEDIUM WAVE			
	1								4			10209810-2	DETECTOR ASSEMBLY, PHOTOMETER LONG WAVE SIMULATOR			
								1	3			10209810-1	DETECTOR ASSEMBLY, PHOTOMETER LONG WAVE			
								1	2			10209860-2	SUSPENSION ASSEMBLY			
1	1	1	1	1	1	1	1		1			10209860-1	SUSPENSION ASSEMBLY			

QTY REQD

MATERIAL

METRIC

THIRD ANGLE PROJECTION

NEXT ASSEMBLY	USED ON
	SPIRE

APPLICATION

UNLESS OTHERWISE SPECIFIED
DIMENSIONS ARE IN MILLIMETERS
LINEAR TOLERANCES:
0-6 ± 0.1
OVER 6-30 ± 0.2
OVER 30-120 ± 0.3
OVER 120-315 ± 0.5
OVER 315-1000 ± 0.8
OVER 1000 ± 1.2
ANGULAR TOLERANCES: ± 0.5°
MACHINE FINISH (MICROMETERS) 3.2
DO NOT SCALE DRAWING
INTERPRET DWG PER ASME Y14.100M

CONTRACT NO 1244858

		APPD	DATE
DWN	D. CRUMB		03/11/04
CHK	R MCNABB		03/11/04
STRUCT	P MACNEAL		03/11/04
MATL	M KNOPP		03/15/04
THRM CONT			
ENGR	M WEILERT		03/11/04
DSGN SUPV			

JET PROPULSION LABORATORY
CALIFORNIA INSTITUTE OF TECHNOLOGY
PASADENA, CA 91109
RELEASED THROUGH EDMG

BOLOMETER DETECTOR ASSEMBLY

SIZE	CAGE NO		REV
A1	23835	10209800	B
SCALE NONE		UNCLASSIFIED	SHEET 1 OF 4

REV 2/00

A1 10209800

AutoCAD GENERATED

Released on DEC-09-2004 by Richard G Bannister and signed by Richard S Mcnabb CHK, Paul D Macneal STRU, Michael D Knopp MATL, Dustin J Crumb DEGN, Mark A Weilert COGE, Richard G Bannister

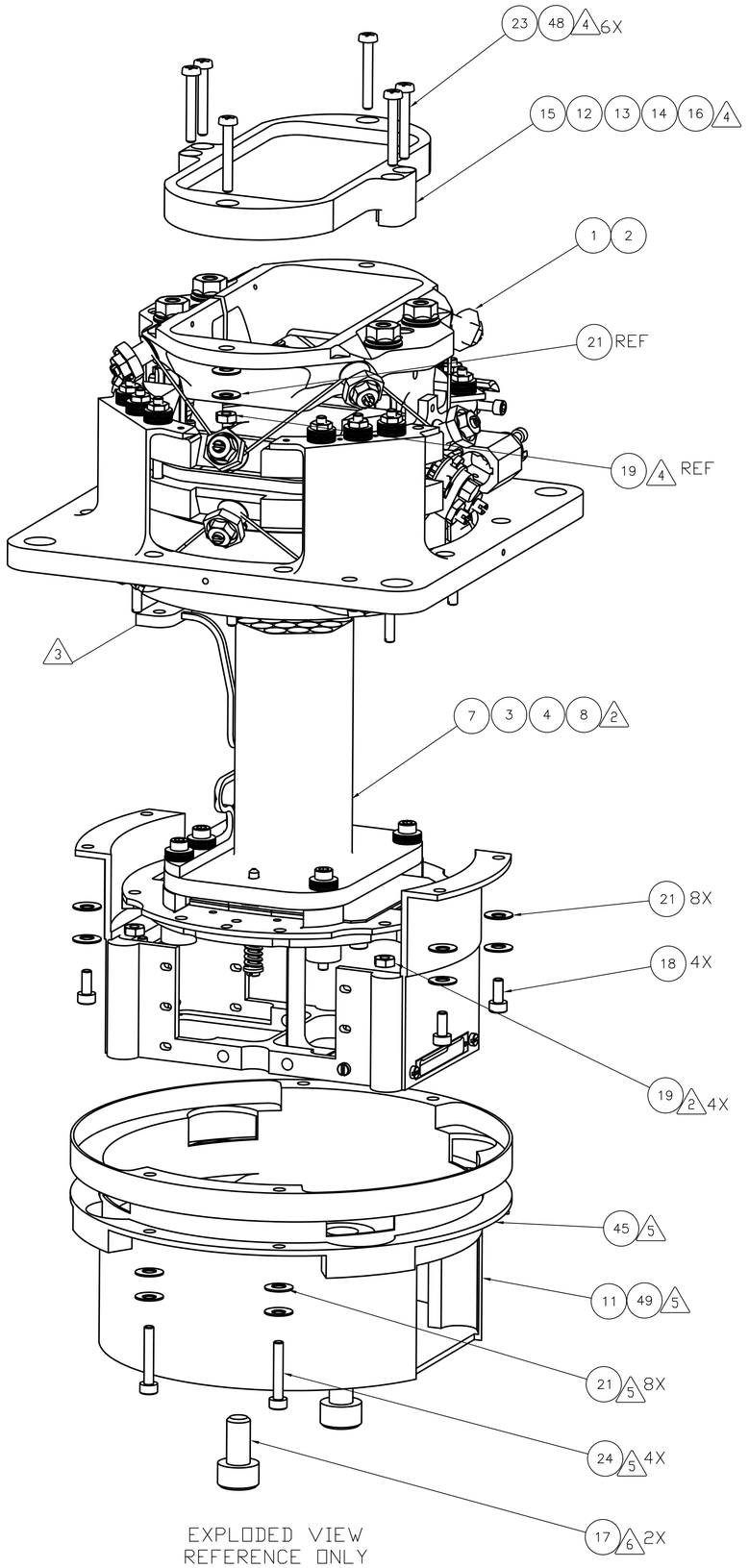

EXPLODED VIEW
REFERENCE ONLY
-4 CONFIGURATION SHOWN
-1, -5 CONFIGURATIONS ARE SIMILAR
-8 CONFIGURATION SIMILAR WITHOUT FILTER

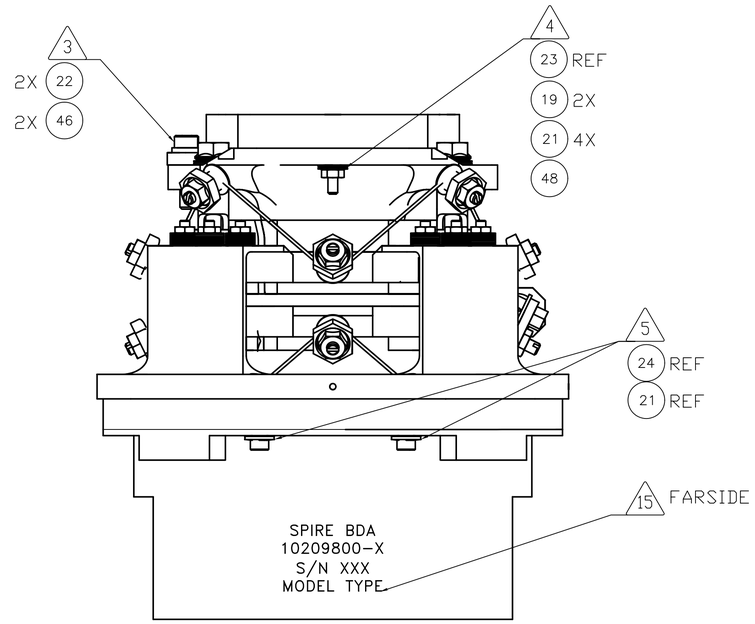

-4 CONFIGURATION SHOWN
-1, -2, -3, -5 CONFIGURATIONS ARE SIMILAR
-8 CONFIGURATION SIMILAR WITHOUT FILTER

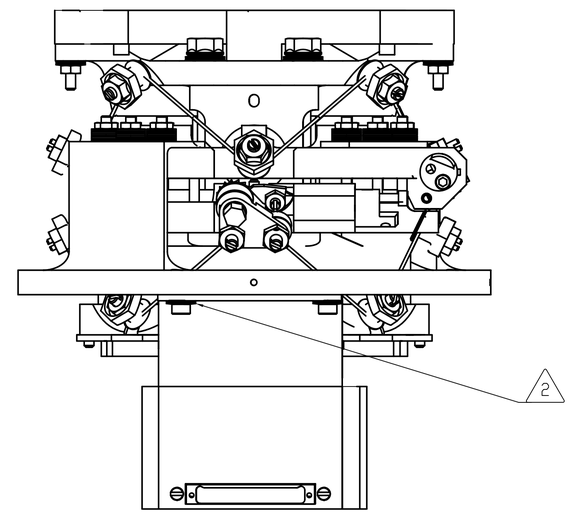

COMPONENTS REMOVED FOR CLARITY
-4 CONFIGURATION SHOWN
-1, -2, -3, -5 CONFIGURATIONS ARE SIMILAR
-8 CONFIGURATION SIMILAR WITHOUT FILTER

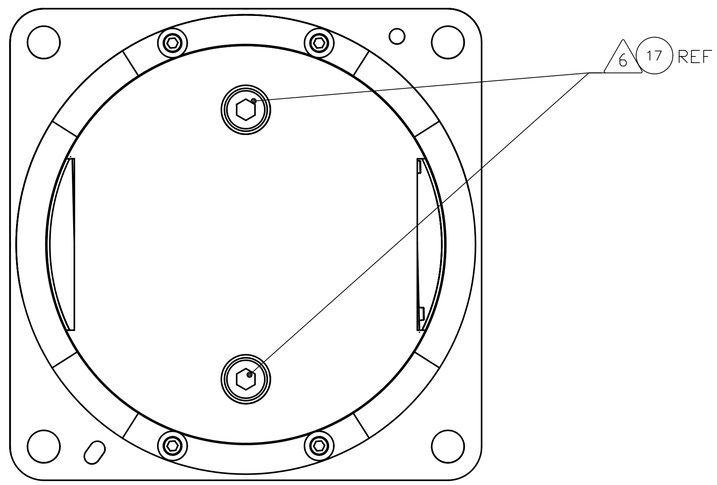

-4 CONFIGURATION SHOWN
-1 AND -5 CONFIGURATIONS ARE SIMILAR
-8 CONFIGURATION SIMILAR WITHOUT FILTER

SIZE	CAGE NO		REV
A1	23835	10209800	B
SCALE NONE	UNCLASSIFIED	SHEET 2 OF 4	

REV 2/00

AutoCAD GENERATED

10209800

Released on DEC-09-2004 by Richard G Bannister and signed by Richard S Mcnabb CHK, Paul D Macneal STRU, Michael D Knopp MATL, Dustin J Crumb DEGN, Mark A Weiler COGE, Richard G Bannister

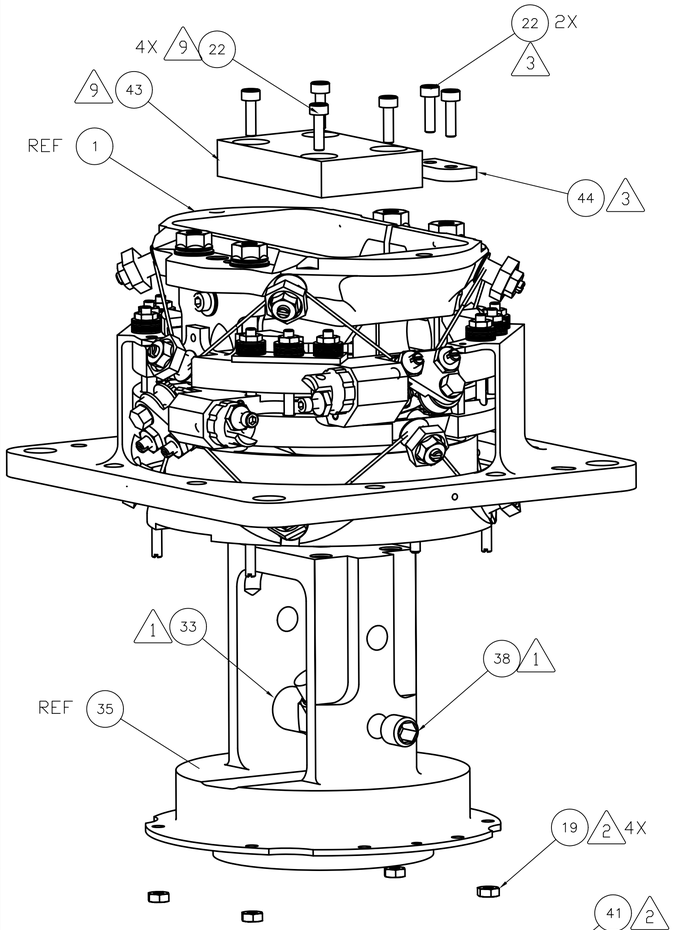

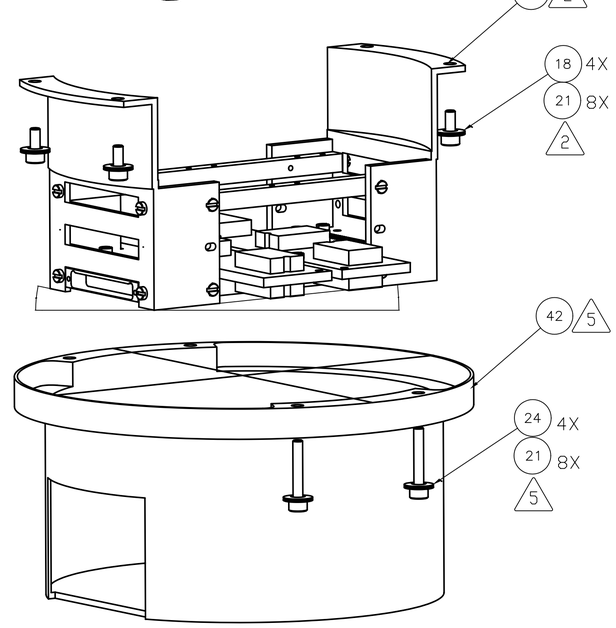

GENERAL VIEW
REFERENCE ONLY
SCALE: NONE
-9 CONFIGURATION,

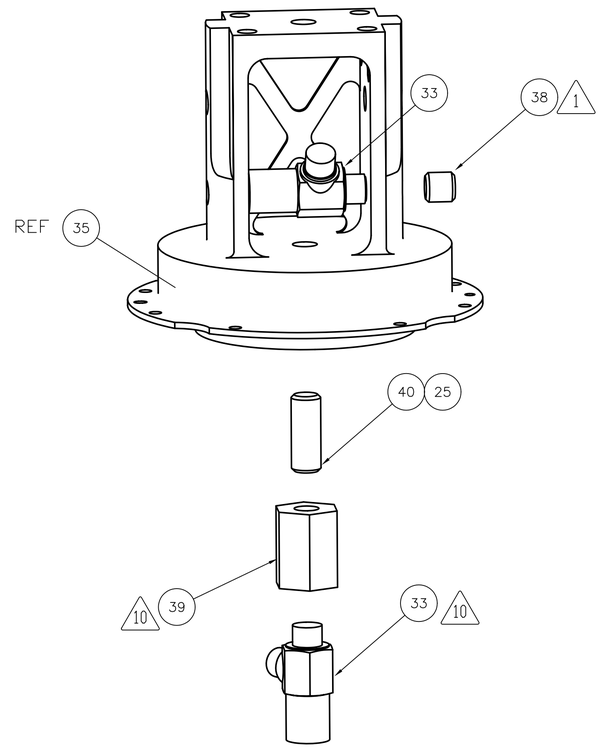

GENERAL VIEW
REFERENCE ONLY
SCALE: NONE
-7 CONFIGURATION,
ONLY ACCELEROMETERS AND
MASS SIMULATOR SHOWN

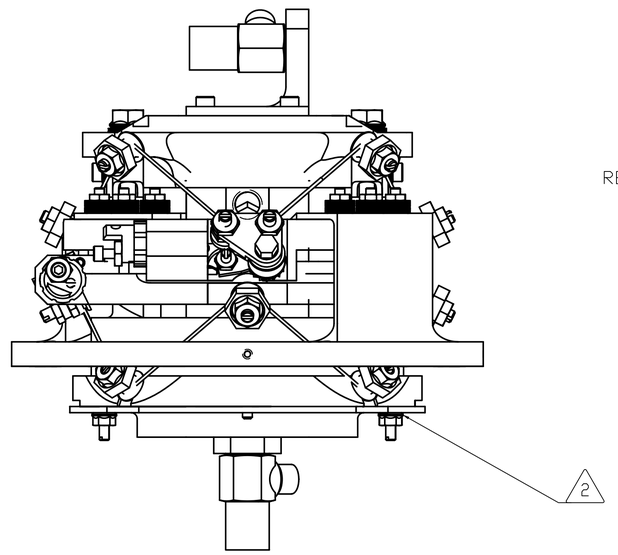

-7 CONFIGURATION

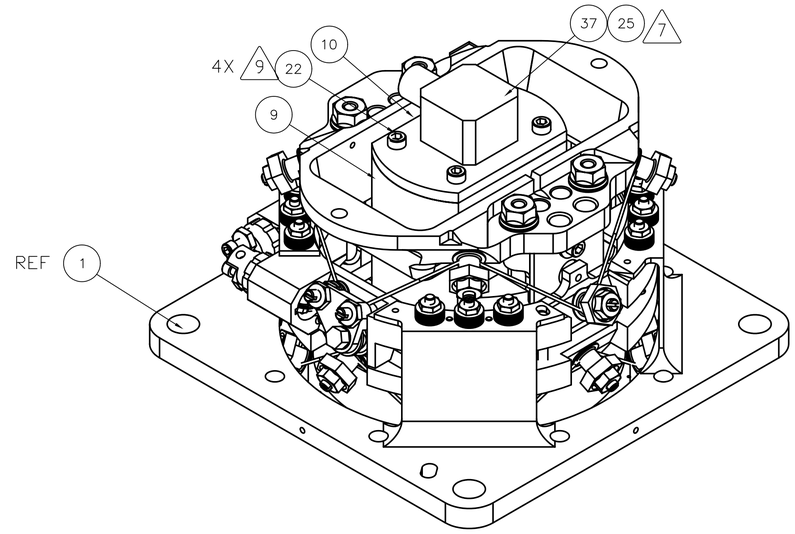

GENERAL VIEW
REFERENCE ONLY
SCALE: NONE
-6 CONFIGURATION

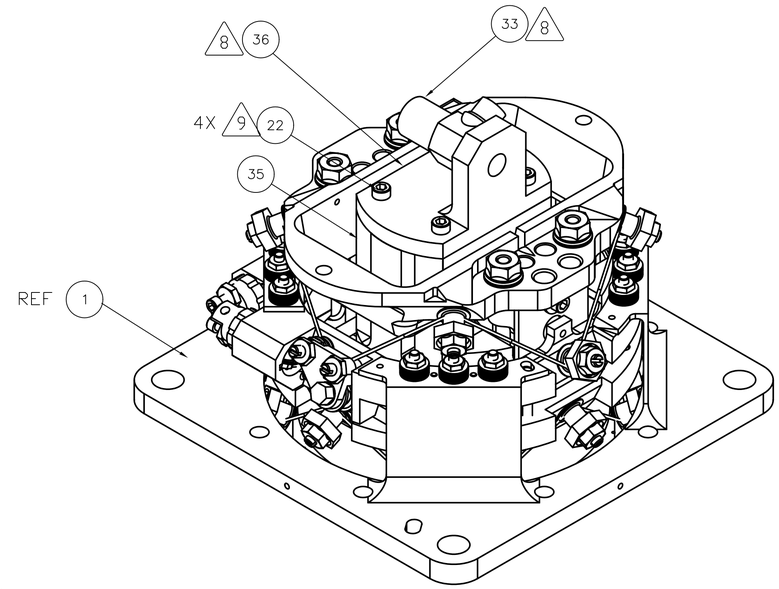

GENERAL VIEW
REFERENCE ONLY
SCALE: NONE
-7 CONFIGURATION

SIZE	CAGE NO		REV
A1	23835	10209800	B
SCALE NONE	UNCLASSIFIED	SHEET 3 OF 4	

REV 2/00

AutoCAD GENERATED

10209800

Released on DEC-09-2004 by Richard G Bannister and signed by Richard S Mcnabb CHK, Paul D Macneal STRU, Michael D Knopp MATL, Dustin J Crumb DEGN, Mark A Weilert COGE, Richard G Bannister

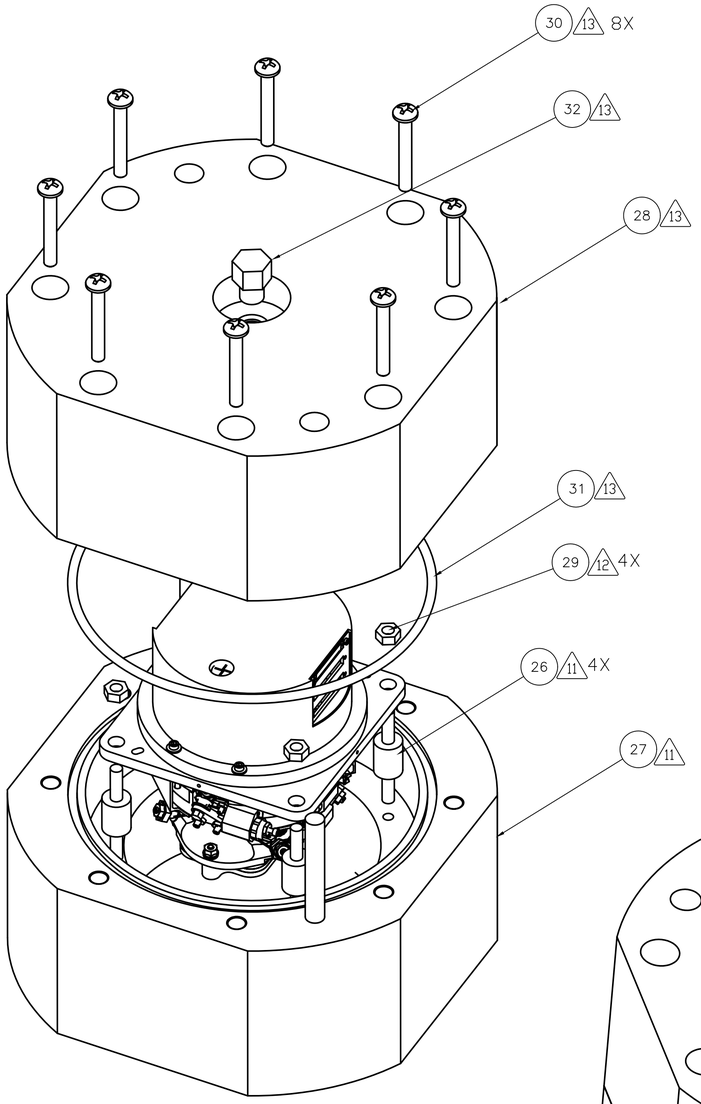

EXPLODED VIEW
REFERENCE ONLY
-5 CONFIGURATION
-1,-2,-3,-4, -8 AND -9 SIMILAR
-6 AND -7 SIMILAR WITH NO CAN

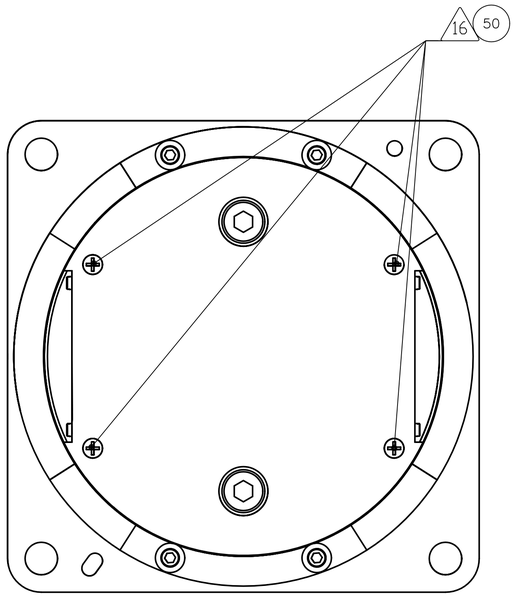

-2 CONFIGURATION SHOWN
-3 CONFIGURATION IS SIMILAR

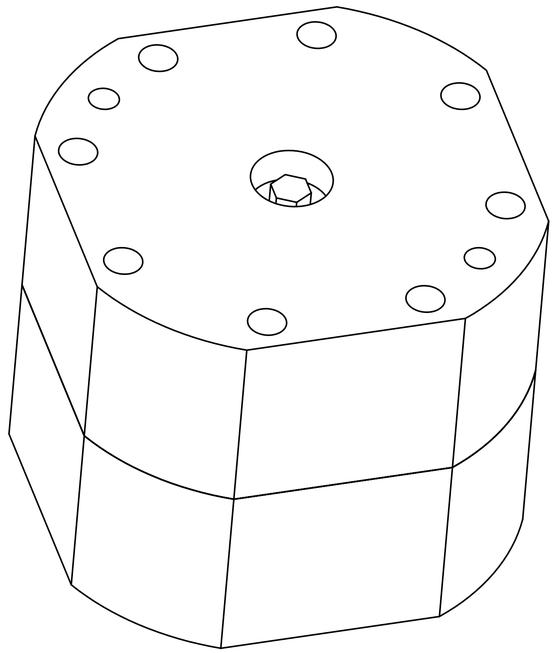

GENERAL VIEW
REFERENCE ONLY
SCALE: NONE
ALL CONFIGURATIONS

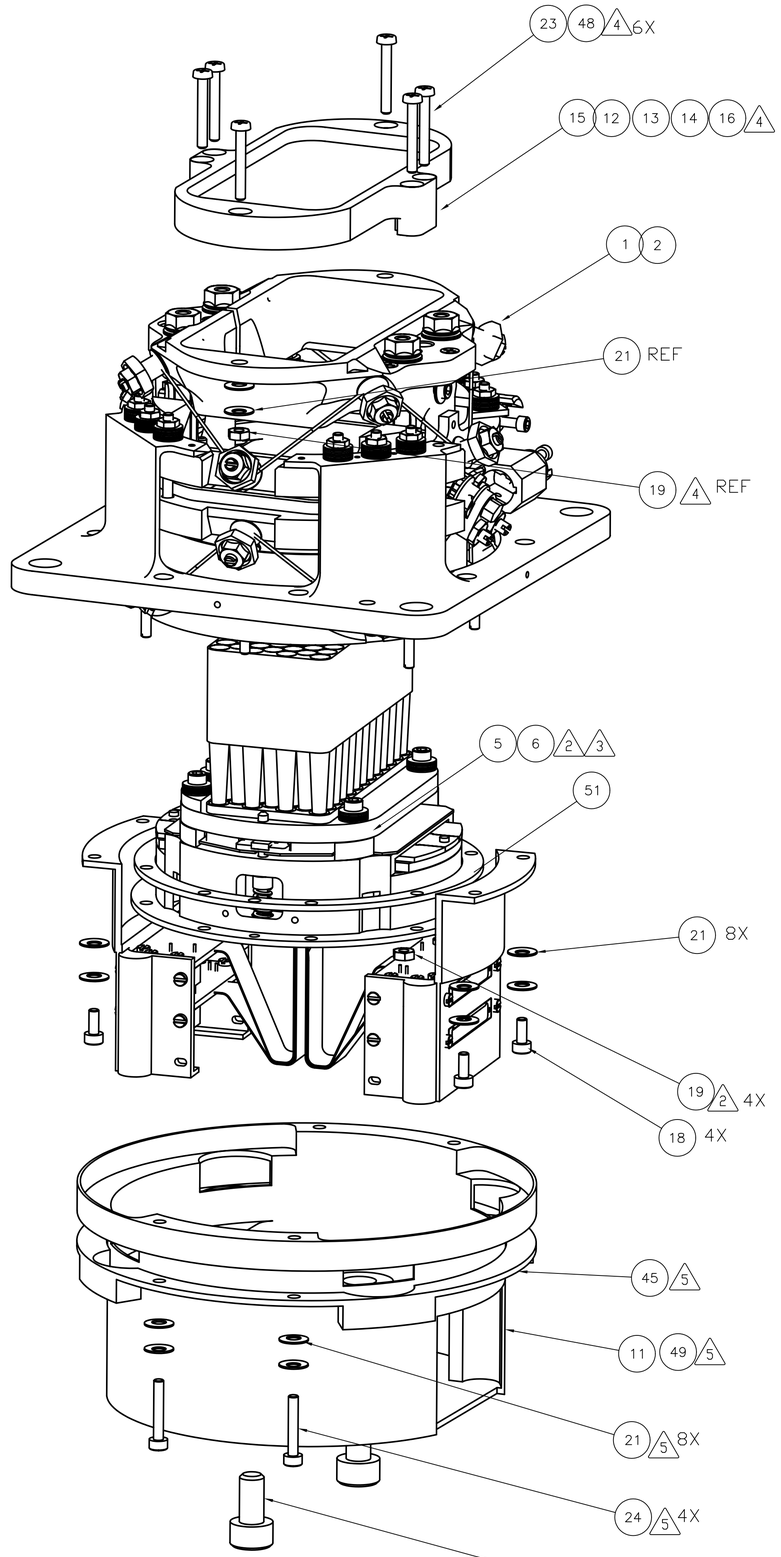

EXPLODED VIEW
REFERENCE ONLY
-2 CONFIGURATION SHOWN
-3 CONFIGURATIONS SIMILAR

SIZE	CAGE NO		REV
A1	23835	10209800	B
SCALE NONE	UNCLASSIFIED	SHEET 4 OF 4	

10209800

AutoCAD GENERATED

REV 2/00

Released on DEC-09-2004 by Richard G Bannister and signed by Richard S Mcnabb CHK, Paul D Macneal STRU, Michael D Knopp MATL, Dustin J Crumb DEGN, Mark A Weilert COGE, Richard G Bannister

ECR/NCR List

PFM PLW BDA 10209800-1 S/N 014

NOTE: None of these apply directly to the PLW BDA type, but they represent changes to the applicable ICDs and top level drawing so they are included here for reference. All of these have been incorporated into released drawings.

1. HR-SP-JPL-ECR-003 – Spectrometer BDA Envelope Height

2. HR-SP-JPL-ECR-005 – 300mK Stage Assembly – BDA Kapton cable routing design error.

3. HR-SP-JPL-NCR-006 – PMW and PSW focal position shift

CCLRC Rutherford Appleton Laboratory	DOCUMENT / ENGINEERING CHANGE REQUEST (ECR)	PRODUCT ASSURANCE Space Science and Technology Department

DCR / ECR Number:	HR-SP-JPL-ECR-003

Spacecraft / Project	**HERSCHEL**	**Originator's Name**	Martin Herman	
System / Experiment / Model	**SPIRE /**	**Signature**		
Sub-System		**Date**	November 20,2003	
Assembly		**Classification**	**Urgent**	**Routine**
Sub-Assembly		**Ref. Doc. / Drwg No.**	JPL dwg 10209721	
Item	Bolometer Detector Assembly (BDA)	**Reference**		

ECR/DCR Title	**Spectrometer BDA Envelope Height**

ECR Description

On the ICD Drawing 10209721 sheet 2, zone H4, the current maximum height dimension is 42.5 mm from the BDA mounting plate. This dimension needs to be changed to 43.6 to encompass the two spectrometer BDA types, SLW and SSW. Photometer BDA types do not require this change. The current dimension will be replaced with a note giving the two BDA type dependent values. The allowed 300mK stage shift given in note 9 will remain.

Need / Justification For Change

The Spectrometer BDA (types SLW and SSW) 300mK filter stacks were at some point increased in thickness due to the addition of a lens. This change was not flowed down into the BDA ICD. The SLW BDA S/N008 maximum height was measured at 44.04 mm from the mounting plate, which is 1.04 mm higher than the current allowed ICD range. The nominal 42.5 mm height plus the 0.5mm allowed displacement of the 300mK stage (see ICD note 9) gives the current 43.0 mm max height.

Affected Items / Work package (Title, Number, Issue, Para)

ICD drawing 10209721 rev B

Related Factors (Highlight as applicable)

Spacecraft	Performance	Power	Others (Specify)
Ground Segment	Elect. Interfaces	Weight	
Launch Vehicle	Mech. Interfaces	Schedule	
Payload	Test/Verification	Cost	

Attachments	Distribution

Change Approved Project		**Change Approved Customer**	
Project Closure		**Customer Closure**	

CCLRC Rutherford Appleton Laboratory	DOCUMENT / ENGINEERING CHANGE REQUEST (ECR)	PRODUCT ASSURANCE Space Science and Technology Department

DCR / ECR Number:	HR-SP-JPL-ECR-005

Spacecraft / Project	**HERSCHEL**	**Originator's Name**	Anthony Turner	
System / Experiment / Model	**SPIRE /**	**Signature**		
Sub-System		**Date**	1/19/2004	
Assembly	10209800 -2 and -3	**Classification**	**Urgent**	**Routine**
Sub-Assembly	10209820 and 10209830	**Ref. Doc. / Drwg No.**	10209775	
Item	Kapton cables assemblies, 10217706 and 10209825	**Reference**		

ECR/DCR Title	**300mk Stage Assembly-BDA Kapton cable routing design error**

ECR Description

Kapton cable right (10217705) was designed for a length of 73.93mm and Kapton cable left (10209824) was designed for a length of 68.87mm. This length designation forces the shorter cable to route into connector positions J01 and J02 on the 10209820 and 10209830 Detector Assembly-BDA builds while the longer cable will route into the J03 and J04 connector positions. This routing will cause a swap in the pixel maps for each connector denoted in wiring schematic 10209725-A under the 10209800-2 and 10209800-3 columns. Below is the correct switch in pixel maps for each column (only the first pixel of the original column is denoted for all connectors but the entire column should be switched accordingly):

10209800-2 P/MW: J01 – first pixel A7, J02 – first pixel E7, J03- first pixel A13, J04 – first pixel R1

10209800-3 P/SW: J01 – first pixel D6, J02 – first pixel F12, J03- first pixel R1, J04 – first pixel E1

Need / Justification For Change

The current flex cable assembly/routing will not correctly map to the pixel locations denoted in 10209725-A wiring schematic, SPIRE. The current schedule/budget will not allow for an acquisition of replacement cables which may have at least a 12-20 week lead from the manufacture. All sub-assembly builds (10209820 and 10209830) would have to be placed on hold until the new cables arrive. The schedule impact could be up to 6 months. The above pixel map designation change would have a minimal effect on the software side, save from rebuilding flex kapton cables and keep the project on its current schedule.

Affected Items / Work package (Title, Number, Issue, Para)

All 10209820 and 10209830 sub assemblies.
Drawing 10209775-A

Related Factors (Highlight as applicable)

Spacecraft	Performance	Power	Others (Specify)
Ground Segment	Elect. Interfaces	Weight	
Launch Vehicle	Mech. Interfaces	Schedule	
Payload	Test/Verification	Cost	

Attachments	Distribution

Change Approved Project		**Change Approved Customer**	
Project Closure		**Customer Closure**	

CCLRC Rutherford Appleton Laboratory	NON-CONFORMANCE REPORT (NCR)	PRODUCT ASSURANCE Space Science and Technology Department

NCR Number:	HR-SP-JPL-NCR-006

Spacecraft / Project	**Herschel**	**Originator's Name**	Martin Herman	
Experiment / Model	SPIRE / PFM+FS	**Signature**		
Sub-System		**Date**	July 1, 2004	
Assembly		**Level (Highlight if applicable)**	Major	Minor
Sub-Assembly				
Item	PMW and PSW BDA (10209800 -2 and -3)	**NRB Reference**		
Serial Number	11, 12, 14,15 (TBC)			

NCR Occurred During (Highlight if applicable)	Manufacture	Inspection	Test	Integration	Other

NCR Title	**PMW and PSW focal position shift**

NCR Description

An internal mechanical interference problem discovered during the manufacture of the PMW BDA has required a shift of the feedhorn and detector position with respect to the exterior envelope of the BDA. The exterior BDA envelope is unchanged. This NCR applies to PFM and FS models of the PMW and PSW BDAs.

This problem causes a non-conformance with the focus position specified in the ICD drawing 10209721 (see sheet 2, zone G3, and values tabulated on sheets 5-7). The PMW nominal focus position is changed by 1.0mm from 33.2mm to 32.2mm. The PSW focus position is changed by 1.2mm from 25mm to 23.8mm.

Front-short and back-short distances at the detectors are not affected by this change. The distance from the 300mK filter to the feedhorn entrance plane is increased by the shifts given above.

Other effects of this NCR are a small mass increase (approximately 4 grams) and a slight CG shift (estimated z-cg decrease of ~0.5mm). (Note that the PFM PMW, which is the only affected unit yet assembled, has a mass of 605g including the mass increase. This is still less than the 632g ICD limit.)

Cause of NCR

Disposition / Corrective Action

Document or Drawing Affected (Title, Number & Issue)

Estimated COST OF NCR (cost of : correction, Materials, Resource, and delay to Project etc.)

NCR Number:	HR-SP-JPL-NCR-006

NCR CLOSED (Signatures Required)	PA Manager (Or Deputy)	Project Manager (Or Deputy)	Date

Waiver List

1) **HR-SP-JPL-RFW-005 (Sine Vibration Omission)**

2) **HR-SP-JPL-RFW-006 (Vibration Test Levels)**

CCLRC Rutherford Appleton Laboratory	REQUEST FOR WAIVER / DEVIATION (RFW/RFD)	PRODUCT ASSURANCE Space Science and Technology Department

RFW/RFD Number:	HR-SP-JPL-RFW-005

Spacecraft / Project	Herschel	**Originator's Name**	Kalyani Sukhatme	
System / Experiment / Model	SPIRE	**Signature / Date**		
Sub-System	detectors	**Request Type** (Highlight applicable request)	Waiver (RFW)	Deviation (RFD)
Assembly		**Organisation**	Jet Propulsion Laboratory	
Sub-Assembly		**Ref. Doc. / Drwg No.**	SPIRE-JPL-PRJ-000456	
Item		**References**		
Serial No.				

RFW/RFD Title	**BDA and JFET module sine test deletion**

End Items(s) Affected (Hardware, Software)

Name	CI-Number	Model(s)
Bolometric Detector Assemblies JFET Modules		CQM, PFM, FS CQM, PFM, FS

Requirement / Interface Documents Affected

Specification/Drawing Title	Number	Issue	Date	App. Paragraph
BDA-SSSD (SPIRE-JPL-PRJ-000456)		3.2	Jan 7, 2003	BDA-DES-10, JFET-DES-07

Description of Deviation / Discrepancy / Non-Conformance

High Level Sine- Vibe Test is not performed on these units

Other Items or Requirements (Potentially) Affected

Need for RFW/RFD and Rationale for Acceptance

The hardware has to be qualified under a cold vibration test and is installed in the cold vibration facility for the purpose of the test. The high level sine vibration test configuration will put the hardware and the personnel at risk since the cold vibration facility is not structurally capable of withstanding the high levels. Obtaining additional resources (cost and schedule) for developing a new set-up is not feasible at this time.

	Approved	Rejected	Name	Date
JPL Engineering:				
JPL Product Assurance:				
CCB-Chairman:				
Principal Investigator				
Product Assurance:				
Co-Investigator				
Prime Contractor				
ESA Project Office				

CCLRC Rutherford Appleton Laboratory	REQUEST FOR WAIVER / DEVIATION (RFW/RFD)	PRODUCT ASSURANCE Space Science and Technology Department

RFW/RFD Number:	HR-SP-JPL-RFW-006

Spacecraft / Project	Herschel	**Originator's Name**		
System / Experiment / Model	SPIRE	**Signature / Date**		
Sub-System	Detector	**Request Type** (Highlight applicable request)	Waiver (RFW)	Deviation (RFD)
Assembly	BDA	**Organisation**	Jet Propulsion Laboratory	
Sub-Assembly		**Ref. Doc. / Drwg No.**		
Item		**References**		
Serial No.				

RFW/RFD Title	

End Items(s) Affected (Hardware, Software)

Name	CI-Number	Model(s)
BDA		QM, CQM, PFM, FS

Requirement / Interface Documents Affected

Specification/Drawing Title	Number	Issue	Date	App. Paragraph
BDA-SSSD	BDA-DES-10	3.2	Jan 7, 03	

Description of Deviation / Discrepancy / Non-Conformance

1) **Random Vibration Test Levels are not the same as given in the BDA-SSSD (Issue 3.2), BDA-Des-10**
2) **There are five different flavours of the BDA. The qualification vibration test is done on only one QM unit which is of the PLW type.**

Other Items or Requirements (Potentially) Affected

Need for RFW/RFD and Rationale for Acceptance

1. **The random vibration test levels are as specified by Berend Winter (MSSL) in an email on May 2, 2003, which superceded the BDA-SSSD**
2. **The qualification test program in using the PLW flavor as the only Qual Model, is given in Interoffice Memorandum, Oct. 3, 2003, Henry Abakians, Subject: SPIRE BDA Random Vibration Test Program [IOM 5132-03-167]**

	Approved	Rejected	Name	Date
Engineering:				
Product Assurance:				
CCB-Chairman:				
Principle Investigator				
Product Assurance:				
Co-Investigator				
Prime Contractor				

ESA Project Office				

JPL

INTEROFFICE MEMORANDUM
5132-03-167
October 3, 2003
Project: Herschel/Planck

TO: Martin Herman

FROM: Henry Abakians ha

SUBJECT: SPIRE BDA random vibration test program

This IOM outlines the random vibration test program for Herschel/Planck project's SPIRE element. Due to schedule and cost constrains, our proposed test program does not strictly conform to JPL's standard random vibration program; however, it maintains a medium to low risk posture.
The recommendations will concentrate on the vibration environment since that is the source of highest stresses on the unit. The SPIRE qualification program also includes thermal cycling and accelerated aging, but it will not be addressed in this IOM.

The SPIRE element of the JPL Herschel/Planck project has several Bolometer Detector Assemblies (BDA). These BDAs are identical in their outer housing, and primarily vary in a thermally isolated suspension which contains the bolometer array and the feedhorn (the suspension is held on to the housing via two rows of braided Kevlar strings). There are five flavors to these suspensions: PSW, PMW, PLW, SSW, SLW (P: photometer, S: spectrometer, LW: long wave, MW: medium wave, SW: short wave). The suspensions also vary in their mass and center of gravity (PLW the heaviest, SSW the lightest).

In a traditional JPL Qual/FA test program, a Qual unit for each BDA flavor would be tested (3-axis, 2 min. per axis), and all subsequent flight units would be FA tested (3-axis test, FA levels, 1 min. per axis). In a traditional Protoflight program, all flight units would be protoflight tested (3-axis test, Qual levels, 1 min. per axis).

The SPIRE element has evolved into a Qual/FA/Protoflight test program. We have built and successfully tested a qual unit (CQM, PLW). It was random vibrated at Qual levels and durations (2 minutes) in three axes. This unit successfully passed the random vibration test, and remained within the specifications (performance or otherwise). Our proposed test program for all subsequent BDAs is as follows:

BDA type	test program	random vibe axis	duration
PSW	PF	x	2 min
PMW	PF	x	2 min
PLW	Qual/PF	3 axis Qual	2min/axis
		PF-x axis only	1 min
SSW	PF	x	2 min
SLW	PF	x	2 min

The test program deviates from a standard JPL program; however, we believe it maintains an acceptable risk posture for the following reasons:

1-The vibration in the z-direction is substantially more benign than x and y. Therefore, we can eliminate the random vibration test in the z-direction for all flight units (this is based on the CQM test results).

2-There is sufficient cross-talk between x and y (based on CQM test results). Therefore, we can eliminate the y direction shake and perform the test in the x-direction for an additional 1 minute (x is the more severe direction; moreover, since we are not concerned with low cycle fatigue failure – substantiated by the CQM test - we feel justified in extending the x-direction test duration to 2 minutes, thus indirectly testing for y-direction).
While it is clearly more desirable to test in y-direction directly, eliminating this test is primarily driven by cost and schedule constraints: all our test are performed at or below 100K, thus a one axis vibration will require a minimum of 3 work days; however, extending a 1 minute test to 2 minutes will not impact schedule, cost, or the safety of the hardware.

3-We have tested the heaviest assembly (PLW) for our qualification program. This ensures that our design is validated for the highest possible stresses in the Kevlar string.

4- Force transducers will be utilized in 3 directions. Their responses will be correlated with the CQM results providing additional assurance on hardware workmanship, reliability and robustness.

Concurrence: _____
John Forgrave,
Environmental requirements Engineering, Group Supervisor

Concurrence: _____
Paul MacNeal, Dynamics Engineer
Herschel/Planck

Concurrence: _____ for
Tim Larson, Mission Assurance Manager
Herschel/Planck

Distribution:
Bill McAlpine
Margaret Frerking
Michael O'Connell
Gary Parks
Kalyani Sukhatme
Mark Weilert

Open Problem / Failure Report (PFR) List

Open PFR's on This Hardware (PFM PLW BDA 10209800-1 S/N 014):

NONE

Open PFR's on Similar Hardware:

NONE

SPIRE
Bolometer Detector Assembly
Handling Document

Prepared by
Mark Weilert

20 August, 2003
revised 20 Nov. 03

WARNINGS

BDA is Contamination Sensitive: Open Red Shipping container only in a FED-STD-209 Class 10000 clean room (ISO 14644-1 class 7) or better. Handle BDA with gloves only.

BDA is ESD Sensitive, handle with grounding straps, ESD-safe gloves and ESD smocks at an ESD-safe workstation. Note that no connector savers or other connector protection are shipped with the BDA, per the business agreement.

BDA is Fragile: Do not drop or otherwise shock. Take care to avoid applying unnecessary force to the Kevlar suspended portion of the BDA. In particular, do not torque the thermal strap interface fasteners to greater than 320 N*mm. The BDA is preferably held/supported either by its square mounting flange, or by the light-seal can which holds the electrical connectors. Note that the red shipping container provides only minimal shock isolation, and should be treated as equally fragile while the BDA is inside. Because the Kevlar tension is higher at room temperature than cold, **DO NOT SHAKE TEST AT ANY TEMPERATURE ABOVE 100K** (except for low-level survey shakes, 0.25g typical). A full level shake at room temperature risks **catastrophic** failure. Avoid touching Kevlar braid with anything, it is sensitive to abrasion or cutting by seemingly smooth objects.

BDA is Humidity Sensitive: The Kevlar tension increases with moisture absorption. Keep in a dry environment when possible during storage or while not being handled. (While being actively handled, higher humidity is acceptable to maintain ESD safety, 35-50% RH typical.)

BDA is Temperature Sensitive: The Kevlar tension and creep increases at high temperatures, **DO NOT BAKE OUT AT ABOVE 80°C.**

Unpacking Procedure:

The BDA is shipped in a multi-layer container. A custom shipping container (red) inside a case inside case. The case should be opened only in a reasonably clean area in order to protect the red shipping container, which should only be opened in a class 10000 or better clean room at an ESD-safe workstation. The red shipping container has three shock-monitors attached to the top, labeled 10g, 20g and 50g. The monitors have steel balls and springs which are contained between plastic rails if the unit has not seen the marked shock level. If the monitors have experienced their specified shock, some of the balls will be loose in the bottom. Please note the state of the three shock monitors and report the result to JPL. These monitors may need to be removed from the top of the red shipping container before it is opened, since they probably obstruct access to the vent plug. They are attached with a double-stick tape adhesive and may be pulled off by applying force to the white base. (Avoid just pulling on the clear case, as this will likely open up the monitor and spill the contents.) **NOTE: The cases holding the red shipping container must be returned to JPL for use in future shipments.**

Opening the Red Shipping Container:

An exploded view of the container is shown below. The top is the side with the vent plug in the center. Make sure the area around the plug is clean, then remove the plug to equalize the pressure. The 8 closeout screws are next loosened alternately (with a 1/8"

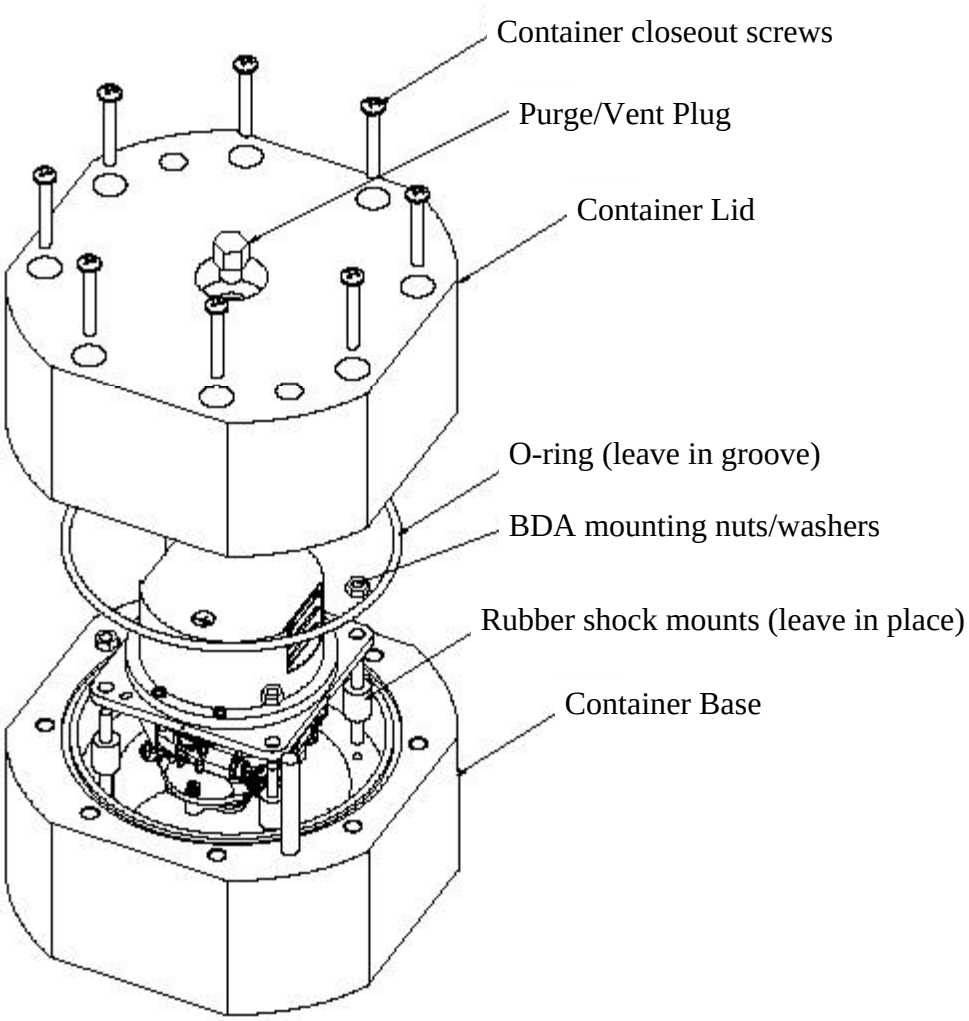

hex key) to relieve pressure on the o-ring seal, and then backed off completely to disengage the screws from the base. The container lid is then lifted straight up to open the container. Two guide pins prevent significant sideways motion of the lid until it is high enough to clear the BDA The BDA is removed from the shipping container base by removing the mounting nuts and washers from the rubber shock mounts and lifting the BDA straight up.

For re-installation of the BDA into the red container, note that the light can must be up, as shown, to prevent the container lid from hitting the BDA. Also, the epoxy terminations of the Kevlar braids should be oriented towards the cutouts in the container base.

SPIRE

Subject: BDA Electronic Handling Procedure, SPIRE P/LW-PFM S/N014

Prepared by: Anthony Turner

Document No:

Issue: Draft **Date: 2/23/05**

Checked by: ……. **Date:……**

Approved by:…… **Date:……**

Distribution

Change Record

Issue	Date

Table of Contents

1. Introduction…..…… page 6
2. Handling……... page 6
3. Signal Requirements……... page 6
4. Device Isolation…… page 7
5. Room Temperature Detector Values Check……. page 7
6. Load Resistor-Detector Continuity Check…… page 10

Glossary

1. Introduction:

This document provides the Electronic Handling Procedure for the Proto-Flight Model-Photometer Long Wavelength Bolometer Detector Array serial number 014.

2. Handling:

1. **BDA is Contamination Sensitive**: Handle BDA with Gloves only in a FED-STD-209 Class 10000 clean room (ISO 14644-1 class 7) or better.

2. **BDA is ESD Sensitive**: Electronic parts included in the P/LW-PFM S/N014 science instrument are subject to electro-static discharge failures. Please handle with appropriate ESD hardware handling procedures. Handle with grounding straps, ESD-safe gloves, ESD smocks at an ESD-safer workstation.

3. Signal Requirements:

The interface circuit for the BDA contains a series of resistive networks as depicted in figure 1. Two high resistive load resistors (~ 6-14 MΩ) are coupled to a NTD Ge thermistor (R_{bolo}) through a lithographed metalization circuit and provide the bias circuitry for the device. The maximum DC input voltage for the bias lines V+ and V- lines is +/- 1 V, and the maximum AC input voltage is 100mV rms.

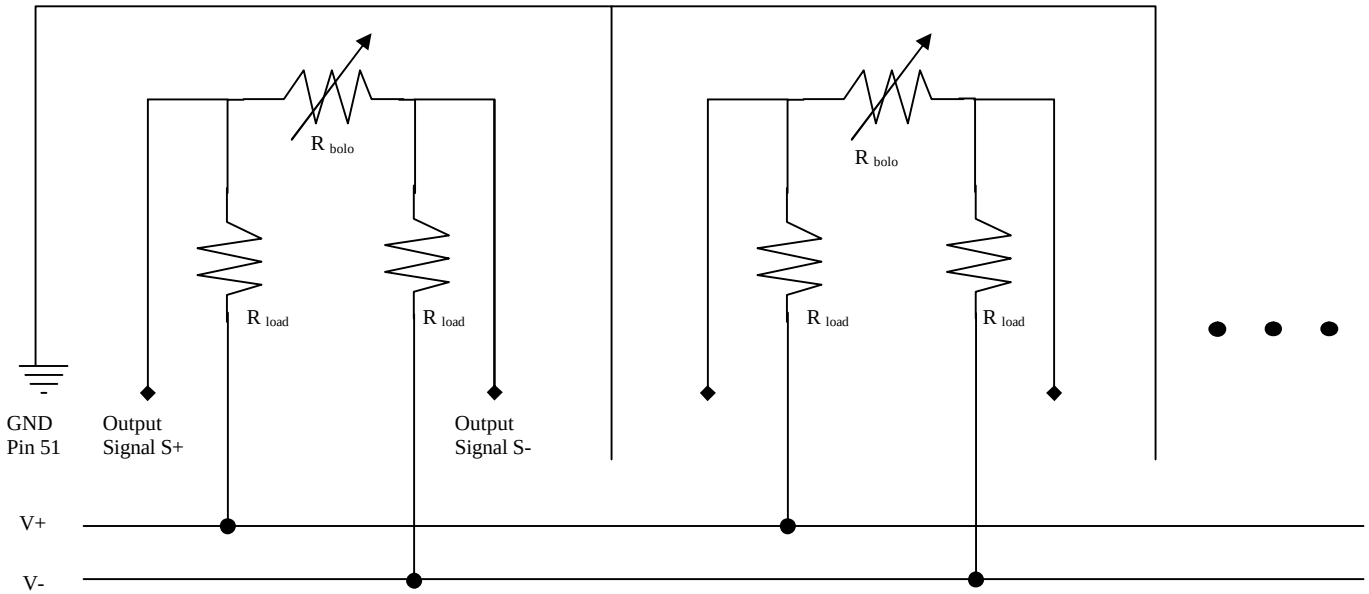

Figure 1: Interface circuit of the Bolometer Detector Array

DC Voltage-Current Limits for Room Temperature Detector Values Check:

Signal	Pin	Nominal Value	Max Value
V+	25	+50mV	+1 V
V-	50	-50mV	-1 V
I+,I-	25,50	10µA	25µA

DC Voltage-Current Limits for room temperature Load Resistor-Detector Continuity Check:

Signal	Pin	Nominal Value	Max Value
V+	25	+50mV	+1 V
V-	50	-50mV	-1 V
I+, I-	25,50	<0.5µA	1µA

4. Device Isolation Check:

The 300mK stage Kevlar suspended portion of the detector chassis is grounded directly to the electronic ground on pin 51 of the nanonics 51 pin connectors on each side. A resistance of less than 200Ω can be checked from the thermal strap of the 300mK stage to electrical ground pin 51. The 2K stage is electrically isolated from the electronic ground via the Kevlar supports. Measuring from pin 51 to any metal section of the 2K stage will yield an open circuit.

5. Room Temperature Detector Values Check

The final measured DC resistance value for each of the bolometer detector at room temperature is shown in tables 1 and 2. The measurements bypass the load resistors in the circuit measuring directly through the output signal pins on the two nanonics 51 pin connectors. All measurements were performed with a Fluke 87 True RMS Multi-meter set in the 4kΩ range. All measurements are in kΩ unless designated otherwise. Channels that are out of range are re-measured using the 40MΩ range to determine their value. The failure mode of any particular channel is also designated in tables 1 and 2. The designation for the failure modes are **open**- Channel open at 300mK, **short**-channel shorted at 300mK, **float**- channel floating at 300mK or **caution**- for cautionary concerning due to detector performance status change during testing at 300mK.

Table 1: P/LW-PFM S/N014 Room Temperature DC Detector Measurements J01 connector

Connector Label	Signal	Nanonics Pin From	Nanonics Pin To	Detector Label	Resistance (kohms)	Failure Mode
J01	1	1	26	R1	3.80M	
	2	2	27	A8	2.727	
	3	3	28	A7	2.636	
	4	4	29	A6	2.586	
	5	5	30	A9	2.713	
	6	6	31	C9	2.797	
	7	7	32	B8	2.74	
	8	8	33	B7	2.648	
	9	9	34	C7	2.664	
	10	10	35	B5	2.534	
	11	11	36	B6	2.547	
	12	12	37	A5	2.435	
	13	13	38	T1	2.48	
	14	14	39	B4	2.496	
	15	15	40	C4	2.569	
	16	16	41	B3	2.562	
	17	17	42	C2	2.694	
	18	18	43	B2	2.627	
	19	19	44	B1	2.698	
	20	20	45	A3	2.627	
	21	21	46	A4	2.609	
	22	22	47	A1	2.778	
	23	23	48	DK1	2.77	
	24	24	49	A2	2.784	
	V- to V+	50	25		0.694M	
	V- to gnd	50	51		>40M	
	V+ to gnd	25	51		>40M	
	Chassis to gnd	chassis	51		68.1 ohms	

Table 2: P/LW-PFM S/N014 Room Temperature DC Detector Measurements J02 connector

Connector Label	Signal	Nanonics Pin From	Nanonics Pin To	Detector Label	Resistance (kohms)	Failure Mode
J02	1	1	26	E1	2.56	
	2	2	27	E2	2.489	
	3	3	28	E3	3.564	
	4	4	29	E4	2.399	
	5	5	30	D1	2.479	
	6	6	31	D2	2.422	
	7	7	32	D3	2.389	
	8	8	33	D4	2.337	
	9	9	34	C1	2.49	
	10	10	35	C3	2.408	
	11	11	36	C5	2.323	
	12	12	37	T2	2.27	
	13	13	38	E5	2.276	
	14	14	39	C6	2.38	
	15	15	40	C8	2.482	
	16	16	41	D5	2.367	
	17	17	42	D6	2.411	
	18	18	43	D7	2.478	
	19	19	44	D8	2.527	
	20	20	45	E7	2.523	
	21	21	46	E6	2.455	
	22	22	47	E8	2.564	
	23	23	48	DK2	2.604	
	24	24	49	E9	2.652	
	V- to V+	50	25		0.662M	
	V- to gnd	50	51		>40M	
	V+ to gnd	25	51		>40M	
	Chassis to gnd	chassis	51		61.2 ohms	

6. Load Resistor-Detector Continuity Check

A DC continuity check of the load resistors in series with the bolometer detectors will complete the electrical checkout at room temperature. The test can be performed with a Fluke 87 True RMS multi-meter set on the 40MΩ scale. The data set measures from V+ to output signal S+ and V- to output signal S- for each channel. The nominal value read for the live bolometer channels (room temp detector DC resistance ~ 1.5kΩ) should read approximately 3-6MΩ. Channels with open bolometer channels will give values 8MΩ or higher. The Data sets for the P/LW-PFM S/N014 for the final test through the entire circuit are shown in tables 3 and 4.

Table 3: P/LW-PFM S/N014 Load Resistor- Detector DC Continuity Check J01 connector

Connector Label	Signal	Detector Label	Bias V+ (pin 25) To S+ pin	V+ to S+ Resistance (Mohms)	Bias V- (pin 50) To S- pin	V- to S- Resistance (Mohms)
J01	1	R1	1	5.04	26	5.04
	2	A8	2	4.2	27	4.2
	3	A7	3	4.2	28	4.2
	4	A6	4	4.2	29	4.2
	5	A9	5	4.22	30	4.24
	6	C9	6	4.23	31	4.24
	7	B8	7	4.24	32	4.24
	8	B7	8	4.23	33	4.24
	9	C7	9	4.24	34	4.24
	10	B5	10	4.24	35	4.24
	11	B6	11	4.24	36	4.24
	12	A5	12	4.28	37	4.24
	13	T1	13	4.24	38	4.25
	14	B4	14	4.25	39	4.26
	15	C4	15	4.24	40	4.24
	16	B3	16	4.25	41	4.25
	17	C2	17	4.26	42	4.25
	18	B2	18	4.28	43	4.28
	19	B1	19	4.28	44	4.25
	20	A3	20	4.25	45	4.24
	21	A4	21	4.27	46	4.28
	22	A1	22	4.28	47	4.28
	23	DK1	23	4.28	48	4.28
	24	A2	24	4.28	49	4.28

Table 4: P/LW-PFM S/N014 Load Resistor- Detector DC Continuity Check J02 connector

Connector Label	Signal	Detector Label	Bias V+ (pin 25) To S+ pin	V+ to S+ Resistance (Mohms)	Bias V- (pin 50) To S- pin	V- to S- Resistance (Mohms)
J02	1	E1	1	4.12	26	4.12
	2	E2	2	4.12	27	4.12
	3	E3	3	4.12	28	4.12
	4	E4	4	4.12	29	4.12
	5	D1	5	4.12	30	4.16
	6	D2	6	4.16	31	4.12
	7	D3	7	4.16	32	4.12
	8	D4	8	4.12	33	4.12
	9	C1	9	4.12	34	4.12
	10	C3	10	4.16	35	4.12
	11	C5	11	4.16	36	4.16
	12	T2	12	4.16	37	4.18
	13	E5	13	4.17	38	4.12
	14	C6	14	4.14	39	4.16
	15	C8	15	4.12	40	4.16
	16	D5	16	4.12	41	4.12
	17	D6	17	4.16	42	4.16
	18	D7	18	4.16	43	4.14
	19	D8	19	4.12	44	4.12
	20	E7	20	4.16	45	4.16
	21	E6	21	4.16	46	4.16
	22	E8	22	4.16	47	4.16
	23	DK2	23	4.15	48	4.2
	24	E9	24	4.16	49	4.16

EIDP Coverpage For PLW BDA (SN014)

Unit Identfication							
Name	PLW BDA						
Part #	10209800-1						
S/N	#014						

Environmemtal Testing							
	Axes Tested	Temperature	Duration or Number of Cycles	Pass/Fail	Requirement	Source	Waiver #
Random Vibration Test	X	100 K	2 min per axis	P	X, Y, Z at 90 K 1 min per axis	SSSD Sec # 3.4	HR-SP-JPL-RFW-006
High Level Sine Vibe Test	None	NA	NA	NA	X, Y, Z at 90 K	SSSD Sec # 3.4	HR-SP-JPL-RFW-005
Bakeout	NA	NA	NA	NA	None (other than as part of the assembly procedure)	D-20549	
Thermal Cycles	NA	RoomT to ~ 6 K	2	P	1 thermal cycle roomT to 77 K (max 5)	D-20549	

Other Testing	Frequency [Hz]						
	Pre-full level	Post-full level			Minimum Performance	Source	Waiver #
Lowest Resonant Frequency	257 Hz	251 Hz			> 200 Hz (Goal: >250 Hz)	SSSD Sec # 3.1.3	NA
Metrology Measurements were performed before and after the Vibration Test and the Thermal Cycles							
	Motion in X/Y	Motion in Z		Meets Goal ?	Performance Goal	Source	Waiver #
Maximum motion due to Random Vibration Test	31 μm	24 μm		Y	125 μm in X/Y and 500 μm in Z	SSSD Sec # 3.1.1	NA
Maximum motion due to the 1st thermal cycle	11 μm	11 μm		Y	125 μm in X/Y and 500 μm in Z	SSSD Sec # 3.1.1	NA
Maximum motion due to the 2nd thermal cycle	5.8 μm	6.7 μm		Y	125 μm in X/Y and 500 μm in Z	SSSD Sec # 3.1.1	NA
Cumulative Maximum motion	46.9 μm	38.7 μm		Y	125 μm in X/Y and 500 μm in Z	SSSD Sec # 3.1.1	NA
Cold Continuity Measurements were made during each of the thermal cycles							
				Pass/Fail	Requirement	Source	Waiver #
Cold Continuity Test (1st Thermal Cycle)				P	None	NA	NA
Cold Continuity Test (2nd Thermal Cycle)				P	None	NA	NA

ENVIRONMENTAL TEST AUTHORIZATION AND SUMMARY (ETAS)

AUTHORIZATION SECTION

PROJECT: Herschel	LOG NO.: HS034
SYSTEM/ASSEMBLY TITLE: SPIRE PXX BDA SN014	DATE ISSUED: 11/23/2004

REFERENCE DESIGNATION NUMBER	PART NO. (IF MULTIPLE, ATTACH LIST)	REV.	SERIAL NO.
	10209800		014

HARDWARE TYPE: ☐ EM QUAL ☒ FLIGHT ☐ FLIGHT SPARE ☐ OTHER

PRE-ENVIRONMENTAL INSPECTION REPORT NUMBER (ATTACH IR):

WIRING HARNESS: ☐ EM QUAL ☐ FLIGHT ☐ EM ☐ SE — PART NO. — REV. — SERIAL NO.

TEST DESCRIPTION (CHECK ALL APPLICABLE): ☐ SINE VIBRATION ☐ PYROSHOCK ☐ ACOUSTIC ☐ EMC ☐ OTHER _____ ☒ RANDOM VIBRATION ☒ THERMAL VAC. ☐ THERMAL ATMOSPHERE

TYPE OF TEST: ☐ QUALIFICATION ☐ FLIGHT ACCEPTANCE ☒ PROTO FLIGHT ☐ RETEST

WILL ALL TESTS/LEVES/DURATIONS REQUIRED BY THE PROJECT DOCUMENTS BE PERFORMED ON THIS UNIT? ☒ YES ☐ NO (IF NO, ATTACH EXCEPTIONS LIST) ENTER PROJ. DOC. NO. AND REV. _____

HAS THE UNIT PASSED ALL PRE-ENVIRONMENTAL FUNCTIONAL TESTS? ☒ YES ☐ NO (IF NO, ATTACH EXCEPTIONS LIST) BRIEF EXPLANATION

HAVE ALL DESIGN ANALYSES BEEN COMPLETED AND REQUIRED CHANGES BEEN IMPLEMENTED? ☒ YES ☐ NO (IF NO, ATTACH EXCEPTIONS LIST) BRIEF EXPLANATION

IS THE TEST ARTICLE IDENTICAL TO OTHER FLIGHT UNITS? ☒ YES ☐ NO (IF NO, ATTACH EXCEPTIONS LIST) BRIEF EXPLANATION

ARE ALL PFRs AGAINST THIS UNIT CLOSED? ☒ YES ☐ NO (IF NO, ATTACH EXCEPTIONS LIST) BRIEF EXPLANATION

HAVE ALL WAIVERS AND ECRs BEEN APPROVED AND ARE THEY INCORPORATED? ☒ YES ☐ NO (IF NO, ATTACH EXCEPTIONS LIST) BRIEF EXPLANATION

TEST AUTHORIZED BY

COGNIZANT ENGINEER	DATE	TECHNICAL MGR./INSTR MRG./PI PREP REP	DATE	ENVIRONMENTAL REQUIREMENTS ENG.	DATE
[signature]	11/23/04	[signature]	2/9/05	[signature]	2-8-05

SUMMARY SECTION

TEST AGENCY (IF MULTIPLE, ATTACH SUMMARY AND TEST DATES)	TEST INITIATION DATE	ACCUMULATED OPERATING HOURS PRIOR TO FIRST ENVIRONMENTAL TEST
JPL Building 144	11/30/04	
SERIAL NUMBERS ACTUALLY TESTED	**TEST TERMINATION DATE**	**OPERATING HOURS DURING ENVIRONMENTAL EXPOSURE**
SN 014		

TEST DESCRIPTION

VIBRATION	ACOUSTIC	PYROSHOCK SHOCK	☒ THERMAL VACUUM	☐ TEMPERATURE ATMOSPHERE	☐ OTHER
AXES: X Y Z SINE VIBRATION ☐ ☐ ☐ RANDOM VIBRATION ☒ ☐ ☐	☐	AXES: X Y Z ☐ ☐ ☐ SHOCKS/AXIS:	PRESSURE: <1E-5 mbar, 290K to 7K NO OF CYCLES: 2	NO OF CYCLES:	_____

EMC ☐ COND. SUSC. ☐ COND. EMIS. ☐ ISOLATION ☐ ESD ☐ RAD. SUSC. ☐ RAD. EMIS. ☐ MAGNETICS

TEMP. LEVEL (°c) AND ACCUMULATED DURATION (HRS.)
HOT: _____°c, _____h COLD: _____°c, _____h
HOT: _____°c, _____h COLD: _____°c, _____h

WERE THERE ANY PFRs GENERATED DURING ENVIRONMENTAL TESTS? ☐ YES ☐ NO (IF NO, ATTACH EXCEPTIONS LIST) — LIST PFR NOS. / BRIEF EXPLANATION

ARE THE POST ENVIRONMENTAL DAMAGE INSPECTIONS COMPLETE? ☐ YES ☐ NO (IF YES, ATTACH A COPY OF THE INSPECTION REPORTS. IF NO, ATTACH EXPLANATION) — LIST PFR NOS. / BRIEF EXPLANATION

WERE ALL PLANNED TESTS/LEVELS/DURATIONS ACHIEVED? ☐ YES ☐ NO (IF NO, ATTACH EXCEPTIONS LIST) — LIST PFR NOS. / BRIEF EXPLANATION

☐ TESTS HAVE NOT BEEN SUCCESSFULLY COMPLETED. SEE THE ATTACHED SUMMARY FOR ACTIONS THAT NEED TO BE TAKEN.

COGNIZANT ENGINEER	DATE	TECHNICAL MGR./INSTR MRG./PI PREP REP	DATE	ENVIRONMENTAL REQUIREMENTS ENG.	DATE

☐ HARDWARE HAS SUCCESSFULLY COMPLETED THE ENVIRONMENTAL TESTS LISTED ON THIS FORM OR REMAINING ACTIONS HAVE BEEN TAKEN, INCLUDING RETEST.

COGNIZANT ENGINEER	DATE	TECHNICAL MGR./INSTR MRG./PI PREP REP	DATE	ENVIRONMENTAL REQUIREMENTS ENG.	DATE
[signature]	2/8/05	[signature]	2/9/05	[signature]	2-8-05

OTHER AUTHORIZATION PROVISIONS AND EXPLANATIONS

This is a 1-axis cold vibration test (100 K) done on the BDA. The test will be done with the BDA unit mounted inside a cold vibration facility. 3 force transducers will be mounted in the BDA load path in order to measure the BDA response. After the vibration test, 2 thermal cycles will be completed in a vacuum environment from 290K to 7K.

ENVIRONMENTAL TEST AUTHORIZATION AND SUMMARY (ETAS)
ENVIRONMENTAL TEST SUMMARY

HARDWARE	S/N	ETAS	TEST ENVIRONMENT LEVELS & DURATION	DATE TEST PERFORMED	TEST AGENCY	PASS/ FAIL	COMMENTS
BDA (10209800)	14	34	**LATERAL** 2 minute Random Vibe +3dB/octave 20-100Hz 0.06 g^2/Hz 100-138.5 Hz +36dB/octave 138.5-170 Hz 0.7 g^2/Hz 170-200 Hz -48dB/octave 200-220 Hz .1 g^2/Hz 220-300 Hz -9 dB/octave 300-2000 Hz Total Input: 8.0 Grms Spectrum to be notched in order to get 15 g's response RMS **LONGITUDINAL (not done on this unit)** 2 minute Random Vibe +3dB/octave 20-100Hz 0.08g^2/Hz 100-400Hz -12dB/octave 400-2000Hz Total Input: 6.2 Grms Spectrum to be notched in order to get 15 g's response RMS Each axis1/4 g sine sweep 20-2000 Hz each axisT ~ 100 K 2 Thermal cycles from 290K to 7K				

Sine

101647, Run 3, X axis

Spire BDA

P/N 10209800-, S/N : 014

Force Sum X

Before Shake, Cold

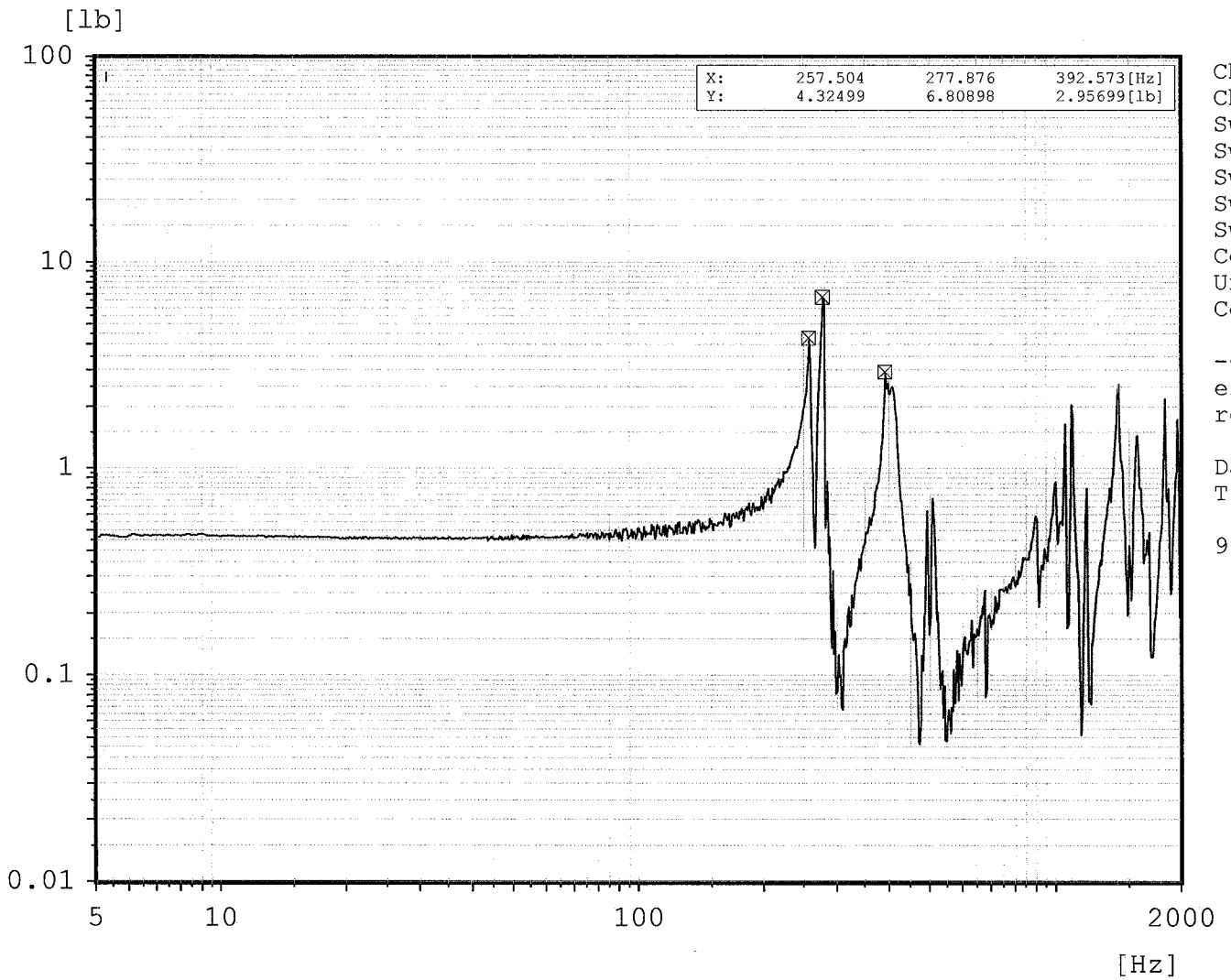

Chan.no: 6
Chan.type: W RMS
Sweep type: logarithmic
Sweeps done: 1
Sweeps req.: 1
Sweep direct.: up
Sweep rate: 4.00 Oct/min
Contr.strat.: Maximum
Unit: lb
Contr.strat.: Closed loop

-- Testing time --
elapsed: 000:02:09
remaining: 000:00:00

Date: 11-29-04
Time: 12:56:01

964#2/Amp #1/ M+P #2

C:\VcpNT\Daten\m+p\SPIRE\BDA\101647 run 3 xax.rsn

Sine

101647, Run 3, X axis

Spire BDA

P/N 10209800-, S/N : 014

Force Sum Y

Before Shake, Cold

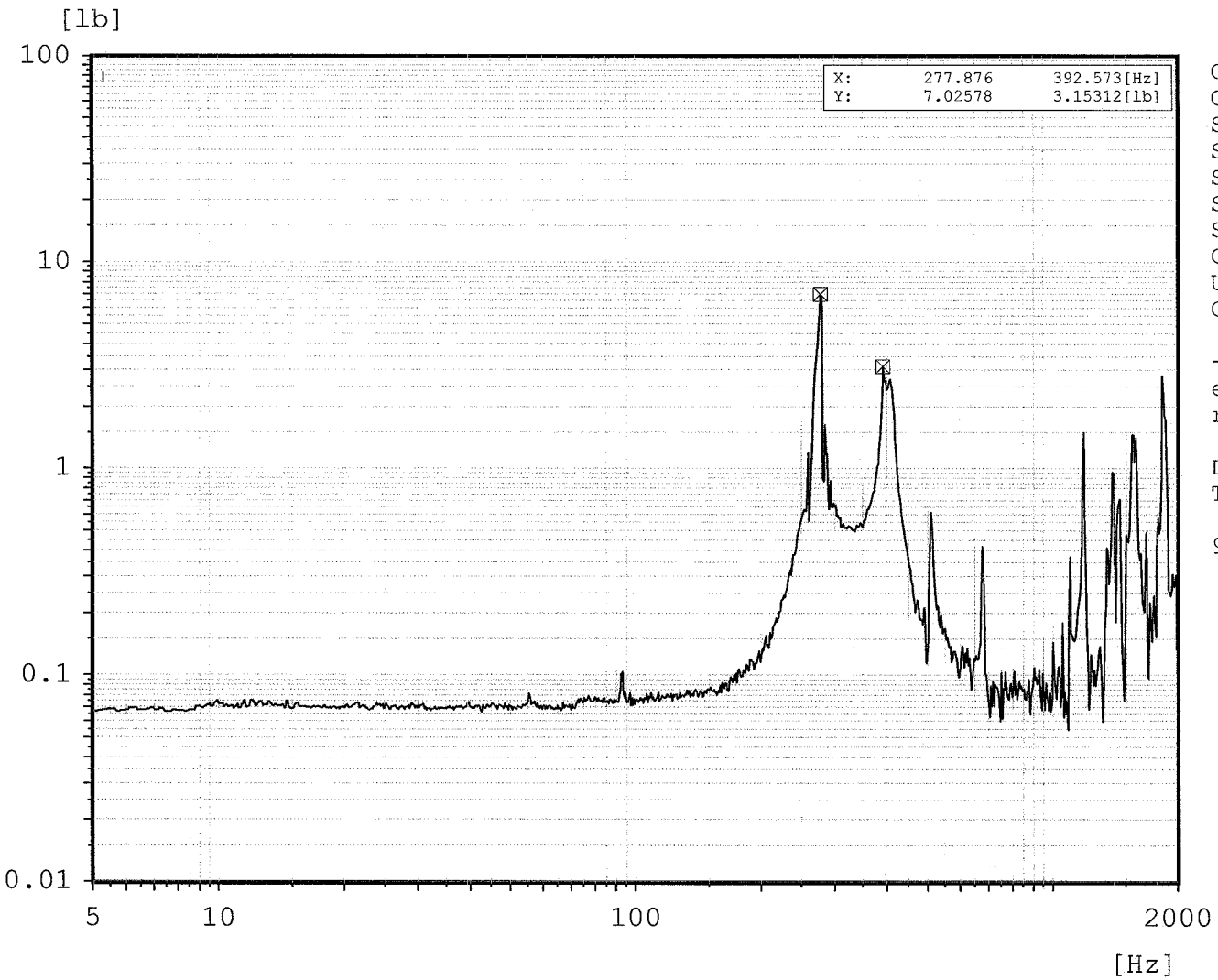

Chan.no: 7
Chan.type: W RMS
Sweep type: logarithmic
Sweeps done: 1
Sweeps req.: 1
Sweep direct.: up
Sweep rate: 4.00 Oct/min
Contr.strat.: Maximum
Unit: lb
Contr.strat.: Closed loop

-- Testing time --
elapsed: 000:02:09
remaining: 000:00:00

Date: 11-29-04
Time: 12:56:01

964#2/Amp #1/ M+P #2

C:\VcpNT\Daten\m+p\SPIRE\BDA\101647 run 3 xax.rsn

Random

101647, Run 7, X axis

SPIRE BDA

P/N 10209800-, S/N : 014

Force Sum X

0dB, Cold

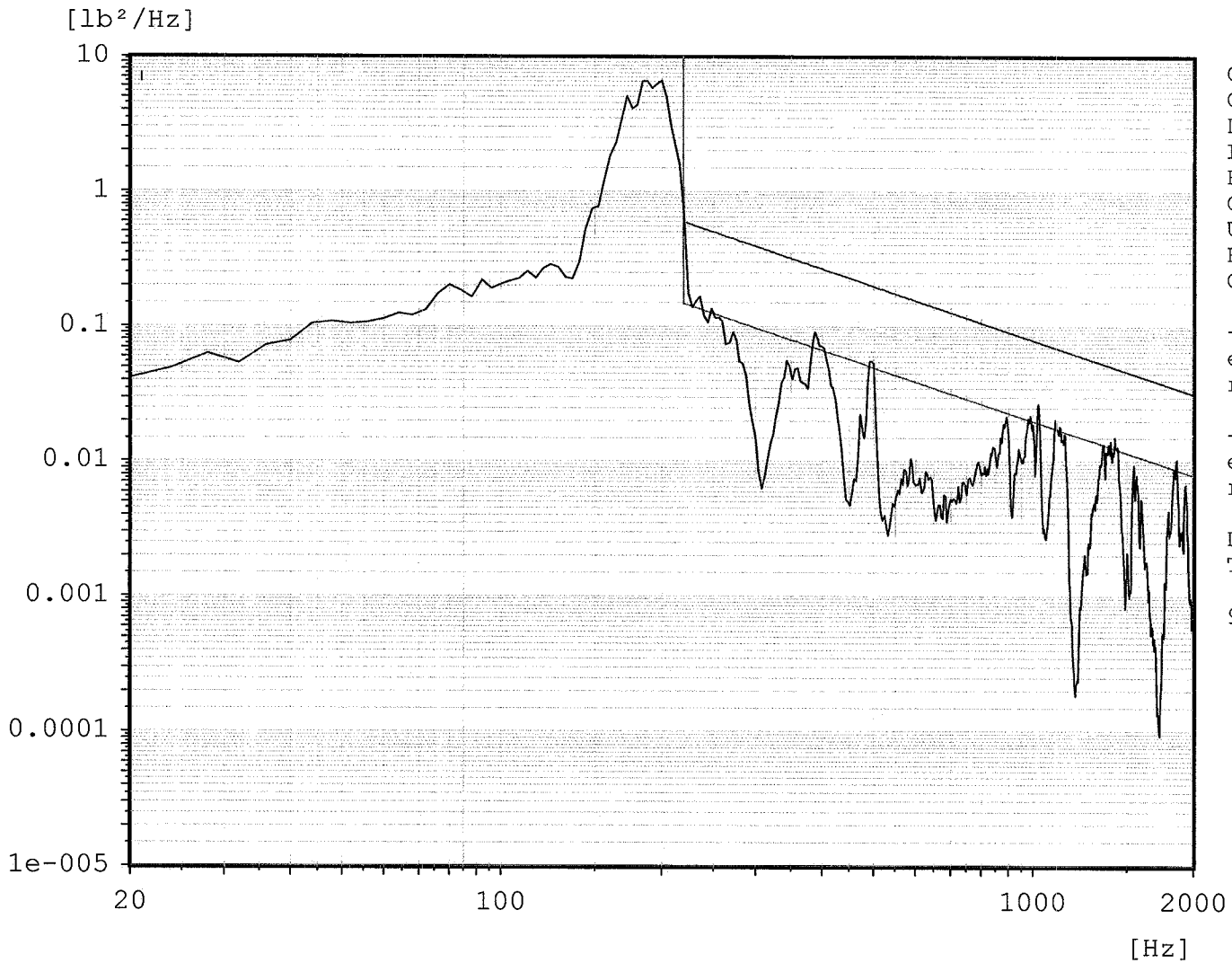

Chan.no:	6
Chan.type:	W
DOF:	90
Level:	0.0 dB
Resolution:	4 Hz
Contr.strat.:	Maximum
Unit:	lb²/Hz
RMS (act.):	17.94 lb
Contr.strat.:	Closed loop

-- Time on act. level --

elapsed:	000:02:00
remaining:	000:00:00

-- Time total --

elapsed:	000:03:03
remaining:	000:00:00

Date:	11-29-04
Time:	13:36:14

964#2/ Amp#1/ M+P#2

C:\VcpNT\Daten\m+p\SPIRE\BDA\101647 run 7 xax.rrn

Random

101647, Run 7, X axis

SPIRE BDA

P/N 10209800-, S/N : 014

Force Sum Y

0dB, Cold

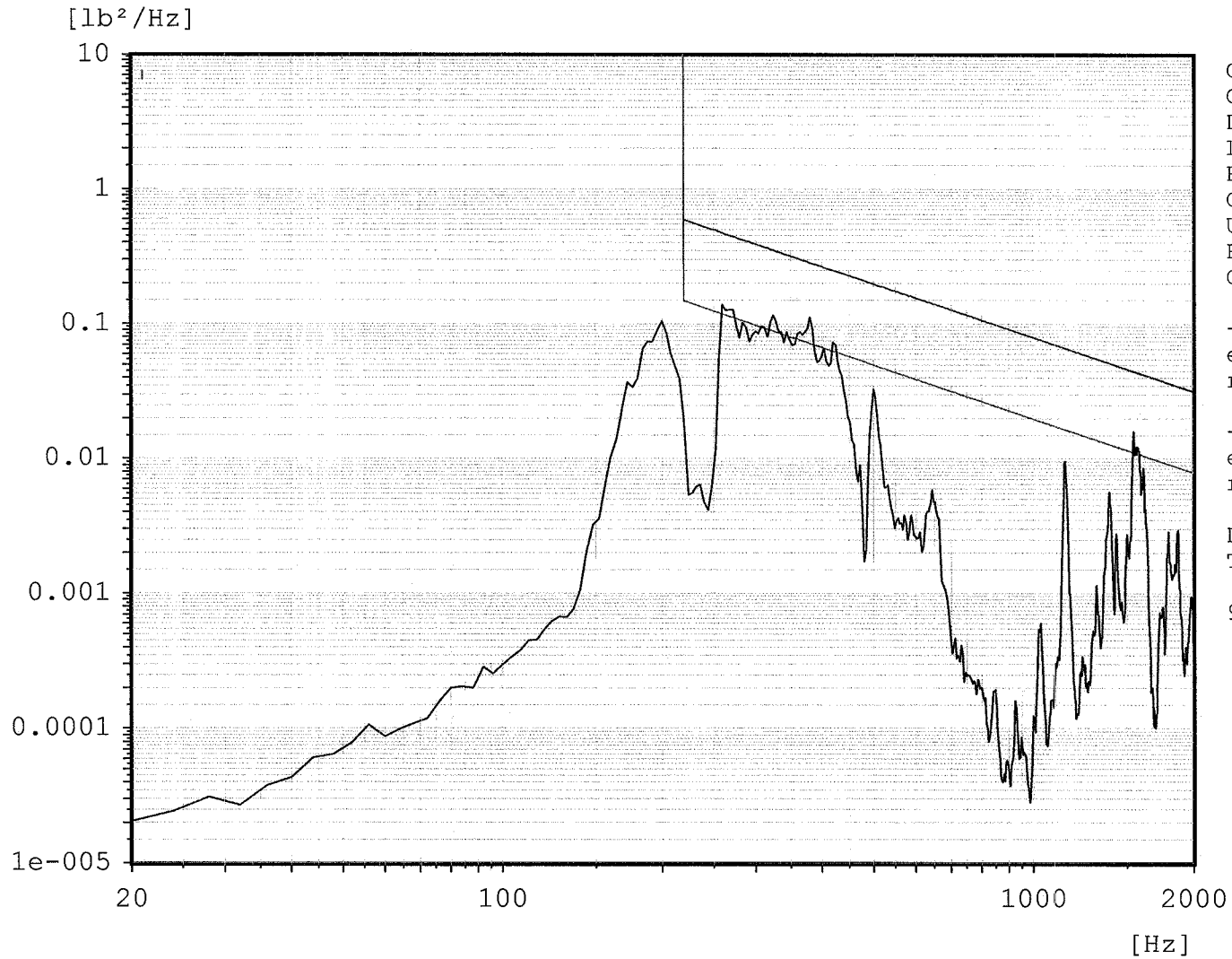

Chan.no:	7
Chan.type:	W
DOF:	90
Level:	0.0 dB
Resolution:	4 Hz
Contr.strat.:	Maximum
Unit:	lb²/Hz
RMS (act.):	4.773 lb
Contr.strat.:	Closed loop

-- Time on act. level --

elapsed:	000:02:00
remaining:	000:00:00

-- Time total --

elapsed:	000:03:03
remaining:	000:00:00

Date:	11-29-04
Time:	13:36:14

964#2/ Amp#1/ M+P#2

C:\VcpNT\Daten\m+p\SPIRE\BDA\101647 run 7 xax.rrn

Sine

101647, Run 9, X axis

Spire BDA

P/N 10209800-, S/N : 014

Force Sum X

After Shake, Cold

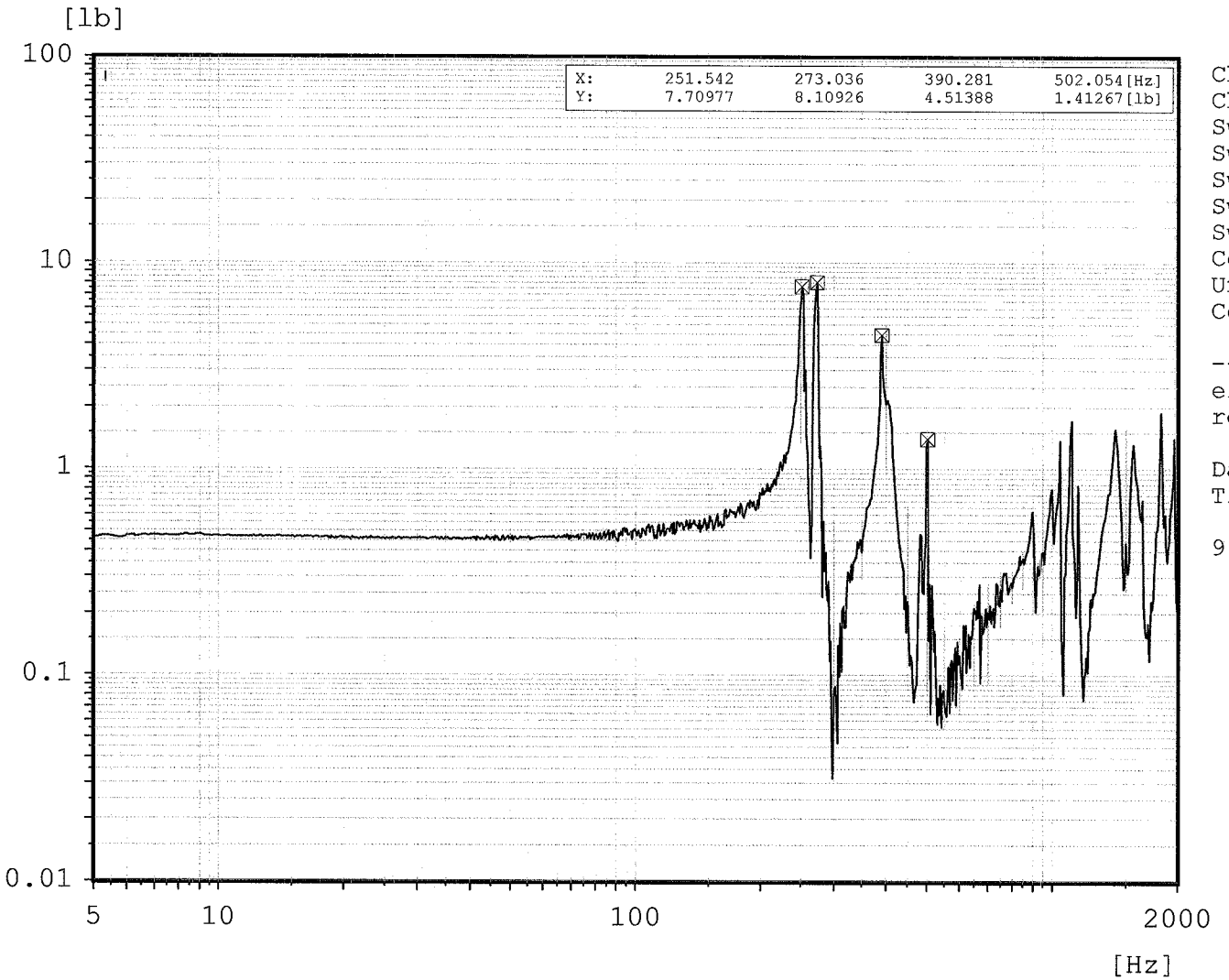

Chan.no: 6
Chan.type: W RMS
Sweep type: logarithmic
Sweeps done: 1
Sweeps req.: 1
Sweep direct.: up
Sweep rate: 4.00 Oct/min
Contr.strat.: Maximum
Unit: lb
Contr.strat.: Closed loop

-- Testing time --
elapsed: 000:02:09
remaining: 000:00:00

Date: 11-29-04
Time: 13:46:34

964#2/Amp #1/ M+P #2

C:\VcpNT\Daten\m+p\SPIRE\BDA\101647 run 9 xax.rsn

Sine

101647, Run 9, X axis

Spire BDA

P/N 10209800-, S/N : 014

Force Sum Y

After Shake, Cold

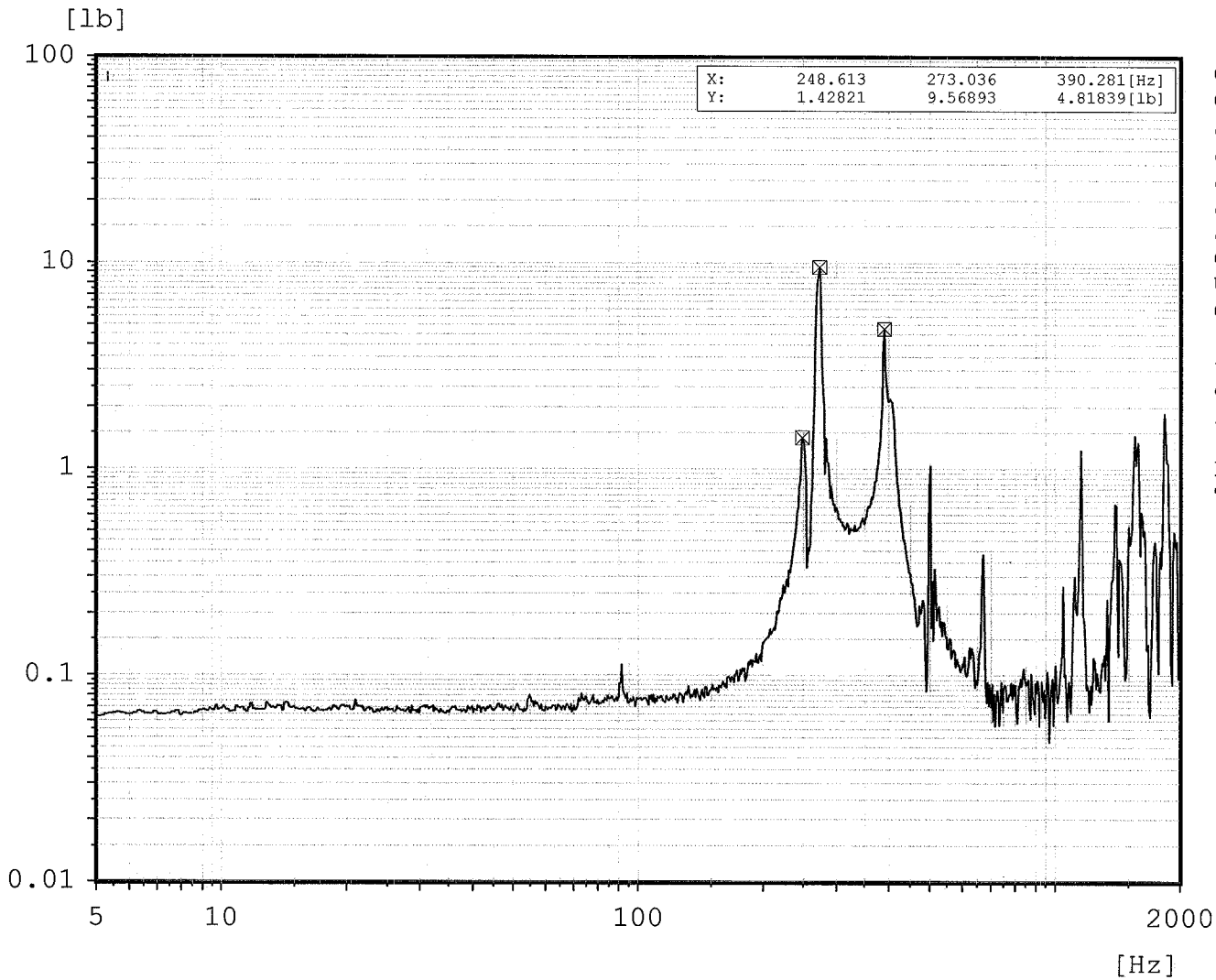

Chan.no: 7
Chan.type: W RMS
Sweep type: logarithmic
Sweeps done: 1
Sweeps req.: 1
Sweep direct.: up
Sweep rate: 4.00 Oct/min
Contr.strat.: Maximum
Unit: lb
Contr.strat.: Closed loop

-- Testing time --
elapsed: 000:02:09
remaining: 000:00:00

Date: 11-29-04
Time: 13:46:34

964#2/Amp #1/ M+P #2

C:\VcpNT\Daten\m+p\SPIRE\BDA\101647 run 9 xax.rsn

PRELIMINARY

2/23/2005

PERFORMANCE VERIFICATION MATRIX - PFM PLW BDA - S/N 10209800-1-014

BDA Performance

Item	D. Value	Min Perf	Measured Median	Unit	Reference	Note
Number of bad optical pixels	= 4	= 11	0		BDA-PER-01	
(NEPphoton/NEPtotal)^2 (derived)	> 0.55	> 0.46	0.44		BDA-PER-02	at 16 mV bias
Optical efficiency*	> 0.85	> 0.65	0.76		BDA-PER-03	
Detector time constant	< 18	< 32	5.9	ms	BDA-PER-06	at 20 mV bias
Vmax***	< 11***		5.8	mV	BDA-DRCU-22	
Calibration uniformity**	> 0.99	> 0.99	N/M		BDA-PER-08	
Cross-talk (n-n)**	< 0.01	< 0.05	N/M		BDA-PER-09	
Cross-talk (non n-n)**	< 0.001	< 0.001	N/M		BDA-PER-09	
1/f knee frequency	< 30	< 100	56	mHz	BDA-PER-10	at 21.2 mV bias
Average conducted heat load from 1.7 K	< 8	< 15	< 2.1	uW	BDA-TEC-06	

BDA Design Values (at 300 mK)

Item	Target	Measured Median	Unit	Reference	Note
R0	180.0	99.9	Ohms	BDA-SSSD	
Delta	41.8	42.2	K	BDA-SSSD	
R300	24.0	14.6	MOhms	BDA-SSSD	
G300	40.0	68.3	pW/K	BDA-SSSD	
Beta	1.5	1.59		BDA-SSSD	
C300	1.00	0.63	pJ/K	BDA-SSSD	
Rlr	10.0	8.1	MOhms	BDA-SSSD	room temp
Dark Sdc	6.0	4.3	e8 V/W	BDA-SSSD	at 21.2 mV bias
Dark NEP (1 Hz), incl 10 nV/rtHz amp. noise	3.3	4.9	e-17 W/rtHz	derived	at 21.2 mV bias
Dark NEP (0.1 Hz), incl 10 nV/rtHz amp. noise	3.3	5.7	e-17 W/rtHz	derived	at 21.2 mV bias
Vmax	5.0	5.2	mVrms	BDA-SSSD	SSSD value in error
BDA temperature rise from 1.7 K	< 10	7	mK	BDA-HCO-1	
BDA thermal time constant	100	< 100	s	BDA-HCO-2	what value?

*assumes νlower = 1.02 νcutoff

**not tested

***Thermistor values are not included

PRELIMINARY

Pixel Performance

Item	DV	MP								
BDA connector			J05	J05	J05	J05	J05	J05	J05	J05
BDA pins			1,26	2,27	3,28	4,29	5,30	6,31	7,32	8,33
BoDAC Connector			4	4	4	4	4	4	4	4
Channel ID			**1**	**2**	**3**	**4**	**5**	**6**	**7**	**8**
Detector ID			R1	A8	A7	A6	A9	C9	B8	B7
BDA Pixel Operability			Yes	Yes	Yes	Yes	Yes	Yes	Yes	Yes
BoDAC channel Operability	N/A	N/A	Yes	Yes	Yes	Yes	Yes	Yes	Yes	Yes
Noisy BoDAC channel	N/A	N/A	No	No	No	No	No	No	No	No
(NEPphoton/NEPtotal)^2 (derived)	> 0.55	> 0.46	N/M	0.47	0.44	0.44	0.46	0.44	0.46	0.44
Optical efficiency*	> 0.85	> 0.65	N/M	0.77	0.78	0.72	0.81	0.78	0.75	0.74
Detector time constant	< 18	< 32	N/M	6.2	5.9	6.3	6.5	5.4	5.1	5.8
Calibration uniformity**	> 0.99	> 0.99	N/A	N/A	N/A	N/A	N/A	N/A	N/A	N/A
Cross-talk (n-n)**	< 0.01	< 0.05	N/A	N/A	N/A	N/A	N/A	N/A	N/A	N/A
Cross-talk (non n-n)**	< 0.001	< 0.001	N/A	N/A	N/A	N/A	N/A	N/A	N/A	N/A
1/f knee frequency	< 30	< 100	N/A	47	47	56	47	47	47	56

Pixel Design Values

Item	Target								
R0	180.0	4.94E+06	149.08	86.20	99.86	121.14	104.51	136.46	103.32
Delta	41.8	0.00	41.59	43.09	42.22	42.33	42.10	41.70	42.34
G300	40	N/A	66.71	67.39	67.11	65.66	66.07	67.67	68.94
Beta	1.5	N/A	1.58	1.61	1.59	1.61	1.61	1.60	1.57
C300	1.00	N/A	0.62	0.63	0.66	0.66	0.55	0.52	0.61
Gamma	1 (fixed)	1.0	1.0	1.0	1.0	1.0	1.0	1.0	1.0
R300	24.1	5.0	19.4	13.8	14.2	17.5	14.6	18.0	14.9
Rlr+	10.0	8.2	8.1	8.0	8.1	8.2	8.2	8.2	8.1
Rlr-	10.0	8.1	8.0	8.1	8.2	8.1	8.1	8.1	8.2
Dark Sdc	6.0	N/M	4.7	4.3	4.3	4.6	4.3	4.6	4.4
Dark NEP (1 Hz), incl 9 nV/rtHz amp.***	3.3	N/M	4.74	4.72	4.82	4.83	4.68	4.65	4.68
Dark NEP (0.1 Hz), incl 9 nV/rtHz amp.***	3.3	N/M	5.33	5.45	5.51	5.49	5.21	5.30	5.20
Vmax	5.0	N/M	5.85	4.91	4.99	5.48	5.04	5.68	5.18

*assumes νlower = 1.02 νcutoff

**not tested

***takes best data between 147 Hz and 149 Hz bias - see Mather_Dark for further information

PRELIMINARY

Pixel Performance										
Item										
BDA connector	J05	J05	J05	J05	J05	J05	J05	J05	J05	J05
BDA pins	9,34	10,35	11,36	12,37	13,38	14,39	15,40	16,41	17,42	18,43
BoDAC Connector	4	4	4	4	4	4	4	4	4	4
Channel ID	**9**	**10**	**11**	**12**	**13**	**14**	**15**	**16**	**17**	**18**
Detector ID	C7	B5	B6	A5	T1	B4	C4	B3	C2	B2
BDA Pixel Operability	Yes	Yes	Yes	Yes	Yes	Yes	Yes	Yes	Yes	Yes
BoDAC channel Operability	Yes	Yes	Yes	Yes	Yes	Yes	Yes	Yes	Yes	Yes
Noisy BoDAC channel	No	No	No	No	No	No	???	No	No	No
(NEPphoton/NEPtotal)^2 (derived)	0.45	0.44	0.41	0.45	N/M	0.44	0.44	0.42	0.44	0.42
Optical efficiency*	0.72	0.73	0.75	0.75	N/M	0.75	0.74	0.74	0.78	0.76
Detector time constant	5.4	5.4	6.7	6.4	N/M	6.0	5.7	5.8	5.8	6.7
Calibration uniformity**	N/A	N/A	N/A	N/A	N/A	N/A	N/A	N/A	N/A	N/A
Cross-talk (n-n)**	N/A	N/A	N/A	N/A	N/A	N/A	N/A	N/A	N/A	N/A
Cross-talk (non n-n)**	N/A	N/A	N/A	N/A	N/A	N/A	N/A	N/A	N/A	N/A
1/f knee frequency	47	56	56	47	84	56	47	65	56	47
Pixel Design Values										
Item										
R0	107.07	108.24	88.47	107.46	95.44	92.89	98.82	89.04	101.79	82.16
Delta	42.41	42.08	41.73	42.42	39.83	42.97	42.68	42.10	42.77	42.83
G300	67.93	68.35	68.40	69.31	N/M	69.26	68.92	71.45	73.13	74.60
Beta	1.60	1.57	1.60	1.56	N/M	1.59	1.59	1.57	1.56	1.58
C300	0.56	0.56	0.72	0.67	N/M	0.64	0.60	0.63	0.63	0.76
Gamma	1.0	1.0	1.0	1.0	1.0	1.0	1.0	1.0	1.0	1.0
R300	15.6	15.1	11.7	15.7	9.6	14.6	15.0	12.4	15.6	12.7
Rlr+	8.2	8.2	8.2	8.2	8.2	8.4	8.2	8.2	8.2	8.2
Rlr-	8.1	8.2	8.2	8.2	8.2	8.2	8.2	8.2	8.2	8.2
Dark Sdc	4.4	4.4	4.1	4.5	N/M	4.4	4.4	4.1	4.4	4.1
Dark NEP (1 Hz), incl 9 nV/rtHz amp.***	4.66	4.61	4.76	5.05	N/M	4.82	7.33	4.75	4.87	4.88
Dark NEP (0.1 Hz), incl 9 nV/rtHz amp.***	5.09	5.37	5.26	5.65	N/M	5.62	7.56	5.50	5.58	5.42
Vmax	5.27	5.20	4.61	5.32	N/M	5.13	5.18	4.82	5.43	4.95
*assumes νlower = 1.02 νcutoff										
**not tested										
***takes best data between 147 Hz and 149 Hz bias										

PRELIMINARY

2/23/2005

Pixel Performance										
Item										
BDA connector	J05	J05	J05	J05	J05	J05	J06	J06	J06	J06
BDA pins	19,44	20,45	21,46	22,47	23,48	24,49	1,26	2,27	3,28	4,29
BoDAC Connector	4	4	4	4	4	4	1	1	1	1
Channel ID	**19**	**20**	**21**	**22**	**23**	**24**	**1**	**2**	**3**	**4**
Detector ID	B1	A3	A4	A1	DK1	A2	E1	E2	E3	E4
BDA Pixel Operability	Yes	Yes	Yes	Yes	Yes	Yes	Yes	Yes	Yes	Yes
BoDAC channel Operability	Yes	Yes	Yes	Yes	Yes	Yes	Yes	Yes	Yes	Yes
Noisy BoDAC channel	No	No	No	No	No	No	No	No	No	No
(NEPphoton/NEPtotal)^2 (derived)	0.43	0.44	0.43	0.43	N/M	0.43	0.44	0.44	0.42	0.44
Optical efficiency*	0.81	0.80	0.78	0.83	0.06	0.80	0.78	0.77	0.73	0.70
Detector time constant	5.6	5.9	6.1	N/M	N/M	11.8	5.5	5.7	6.3	7.5
Calibration uniformity**	N/A	N/A	N/A	N/A	N/A	N/A	N/A	N/A	N/A	N/A
Cross-talk (n-n)**	N/A	N/A	N/A	N/A	N/A	N/A	N/A	N/A	N/A	N/A
Cross-talk (non n-n)**	N/A	N/A	N/A	N/A	N/A	N/A	N/A	N/A	N/A	N/A
1/f knee frequency	56	47	65	47	65	47	75	65	65	65
Pixel Design Values										
Item										
R0	92.58	96.27	98.05	110.50	103.33	108.85	109.44	100.17	88.98	110.16
Delta	42.95	42.78	42.19	41.83	42.54	41.90	41.69	42.66	42.23	41.97
G300	74.29	72.72	71.48	74.05	73.36	72.90	70.48	72.52	69.41	67.53
Beta	1.55	1.54	1.61	1.54	1.53	1.54	1.51	1.54	1.58	1.57
C300	0.62	0.64	0.67	N/M	N/M	1.29	0.59	0.62	0.68	0.78
Gamma	1.0	1.0	1.0	1.0	1.0	1.0	1.0	1.0	1.0	1.0
R300	14.6	14.8	13.9	14.9	15.3	14.8	14.4	15.1	12.7	15.1
Rlr+	8.3	8.3	8.2	8.2	8.3	8.3	8.0	8.0	8.0	8.0
Rlr-	8.2	8.2	8.2	8.3	8.3	8.2	7.9	8.0	7.9	7.9
Dark Sdc	4.3	4.4	4.2	4.3	4.4	4.4	4.3	4.3	4.1	4.3
Dark NEP (1 Hz), incl 9 nV/rtHz amp.***	5.03	6.03	4.95	5.68	5.25	4.98	4.77	5.10	4.88	5.19
Dark NEP (0.1 Hz), incl 9 nV/rtHz amp.***	5.55	6.62	6.96	7.11	6.54	5.72	5.63	6.23	5.98	7.10
Vmax	5.28	5.26	5.10	5.37	5.40	5.31	5.15	5.32	4.79	5.17
*assumes vlower = 1.02 vcutoff										
**not tested										
***takes best data between 147 Hz and 149 Hz bias										

PRELIMINARY

Pixel Performance										
Item										
BDA connector	J06	J06	J06	J06	J06	J06	J06	J06	J06	J06
BDA pins	5,30	6,31	7,32	8,33	9,34	10,35	11,36	12,37	13,38	14,39
BoDAC Connector	1	1	1	1	1	1	1	1	1	1
Channel ID	**5**	**6**	**7**	**8**	**9**	**10**	**11**	**12**	**13**	**14**
Detector ID	D1	D2	D3	D4	C1	C3	C5	T2	E5	C6
BDA Pixel Operability	Yes	Yes	Yes	Yes	Yes	Yes	Yes	Yes	Yes	Yes
BoDAC channel Operability	Yes	Yes	Yes	Yes	Yes	Yes	Yes	Yes	Yes	Yes
Noisy BoDAC channel	No	No	No	???	No	No	No	No	No	No
(NEPphoton/NEPtotal)^2 (derived)	0.44	0.43	0.44	0.42	0.42	0.44	0.42	N/M	0.40	0.40
Optical efficiency*	0.78	0.75	0.73	0.74	0.83	0.76	0.78	N/M	0.78	0.82
Detector time constant	5.5	5.2	5.1	6.6	5.7	5.2	6.2	N/M	6.3	7.9
Calibration uniformity**	N/A	N/A	N/A	N/A	N/A	N/A	N/A	N/A	N/A	N/A
Cross-talk (n-n)**	N/A	N/A	N/A	N/A	N/A	N/A	N/A	N/A	N/A	N/A
Cross-talk (non n-n)**	N/A	N/A	N/A	N/A	N/A	N/A	N/A	N/A	N/A	N/A
1/f knee frequency	65	47	65	112	47	65	56	84	65	56
Pixel Design Values										
Item										
R0	91.90	99.44	108.84	102.90	86.47	98.35	85.54	92.50	78.42	81.38
Delta	43.24	42.47	42.11	41.38	42.26	42.86	42.29	40.22	41.88	41.60
G300	73.04	72.44	69.72	67.62	72.64	71.55	66.44	N/M	65.16	63.36
Beta	1.57	1.56	1.61	1.59	1.52	1.60	1.58	N/M	1.61	1.66
C300	0.61	0.57	0.55	0.70	0.63	0.56	0.65	N/M	0.65	0.80
Gamma	1.0	1.0	1.0	1.0	1.0	1.0	1.0	1.0	1.0	1.0
R300	15.0	14.6	15.2	13.0	12.3	15.3	12.3	9.9	10.6	10.6
Rlr+	8.0	8.0	8.0	8.0	8.0	7.9	8.0	8.0	8.0	8.0
Rlr-	7.9	7.9	8.0	8.0	8.0	8.0	8.0	8.0	8.0	8.0
Dark Sdc	4.3	4.3	4.3	4.1	4.1	4.3	4.1	N/M	3.9	3.9
Dark NEP (1 Hz), incl 9 nV/rtHz amp.***	4.76	5.62	4.89	6.12	5.14	5.19	4.75	N/M	5.02	5.26
Dark NEP (0.1 Hz), incl 9 nV/rtHz amp.***	5.63	6.84	6.03	14.53	5.63	6.09	5.43	N/M	5.94	5.68
Vmax	5.31	5.25	5.28	4.83	4.82	5.33	4.61	N/M	4.28	4.24

*assumes vlower = 1.02 vcutoff

**not tested

***takes best data between 147 Hz and 149 Hz bias

PRELIMINARY

Pixel Performance										
Item										
BDA connector	J06	J06	J06	J06	J06	J06	J06	J06	J06	J06
BDA pins	15,40	16,41	17,42	18,43	19,44	20,45	21,46	22,47	23,48	24,49
BoDAC Connector	1	1	1	1	1	1	1	1	1	1
Channel ID	**15**	**16**	**17**	**18**	**19**	**20**	**21**	**22**	**23**	**24**
Detector ID	C8	D5	D6	D7	D8	E7	E6	E8	DK2	E9
BDA Pixel Operability	Yes	Yes	Yes	Yes	Yes	Yes	Yes	Yes	Yes	Yes
BoDAC channel Operability	Yes	Yes	Yes	Yes	Yes	Yes	Yes	Yes	Yes	Yes
Noisy BoDAC channel	No	No	No	No	No	No	???	No	No	No
(NEPphoton/NEPtotal)^2 (derived)	0.44	0.44	0.43	0.45	0.42	0.45	0.45	0.44	N/M	0.45
Optical efficiency*	0.76	0.75	0.73	0.71	0.77	0.76	N/M	0.77	0.05	0.77
Detector time constant	6.9	5.4	7.3	5.4	5.4	5.6	N/M	7.7	N/M	6.8
Calibration uniformity**	N/A	N/A	N/A	N/A	N/A	N/A	N/A	N/A	N/A	N/A
Cross-talk (n-n)**	N/A	N/A	N/A	N/A	N/A	N/A	N/A	N/A	N/A	N/A
Cross-talk (non n-n)**	N/A	N/A	N/A	N/A	N/A	N/A	N/A	N/A	N/A	N/A
1/f knee frequency	56	56	37	56	47	65	112	65	112	84
Pixel Design Values										
Item										
R0	90.67	114.40	87.40	99.02	83.10	122.06	112.00	100.51	106.57	108.79
Delta	42.89	41.44	42.89	42.89	42.57	41.63	41.92	42.22	42.42	42.12
G300	65.29	65.30	66.81	66.31	66.68	65.09	66.01	64.37	64.93	65.48
Beta	1.62	1.58	1.63	1.63	1.62	1.60	1.61	1.61	1.62	1.60
C300	0.71	0.55	0.77	0.56	0.57	0.57	N/M	0.78	N/M	0.69
Gamma	1.0	1.0	1.0	1.0	1.0	1.0	1.0	1.0	1.0	1.0
R300	14.1	14.5	13.6	15.4	12.4	15.9	15.2	14.3	15.6	15.2
Rlr+	8.0	8.0	8.0	8.0	8.0	8.0	8.0	8.1	8.1	8.0
Rlr-	8.0	8.0	8.0	8.0	8.0	8.0	8.0	8.0	8.0	8.0
Dark Sdc	4.3	4.3	4.2	4.4	4.1	4.4	4.4	4.3	4.4	4.4
Dark NEP (1 Hz), incl 9 nV/rtHz amp.***	4.67	4.65	5.01	4.82	4.87	5.46	6.36	5.05	4.80	4.96
Dark NEP (0.1 Hz), incl 9 nV/rtHz amp.***	5.20	5.69	6.13	5.72	5.54	7.21	9.65	6.67	7.39	6.88
Vmax	4.90	5.02	4.87	5.16	4.65	5.25	5.16	4.91	5.15	5.12
*assumes vlower = 1.02 vcutoff										
**not tested										
***takes best data between 147 Hz and 149 Hz bias										

PRELIMINARY

Pixel Performance			
Item	**Unit**	**Reference**	**Note**
BDA connector			
BDA pins			
BoDAC Connector			
Channel ID			
Detector ID			
BDA Pixel Operability			
BoDAC channel Operability			
Noisy BoDAC channel			
(NEPphoton/NEPtotal)^2 (derived)		BDA-PER-02	at 30 mV bias
Optical efficiency*		BDA-PER-05	
Detector time constant	ms	BDA-PER-07	at 28 mV bias
Calibration uniformity**		BDA-PER-08	
Cross-talk (n-n)**		BDA-PER-09	
Cross-talk (non n-n)**		BDA-PER-09	
1/f knee frequency	mHz	BDA-PER-10	at 21.2 mV bias
Pixel Design Values			
Item	**Unit**	**Reference**	**Note**
R0	Ohms	BDA-SSSD	
Delta	K	BDA-SSSD	
G300	pW/K	BDA-SSSD	
Beta		BDA-SSSD	
C300	pJ/K	BDA-SSSD	
Gamma			
R300	MOhms	BDA-SSSD	
Rlr+	MOhms	BDA-SSSD	room temp
Rlr-	MOhms	BDA-SSSD	room temp
Dark Sdc	e8 V/W	BDA-SSSD	at 21.2 mV bias
Dark NEP (1 Hz), incl 9 nV/rtHz amp.***	e-17 W/rtHz	derived	at 21.2 mV bias
Dark NEP (0.1 Hz), incl 9 nV/rtHz amp.***	e-17 W/rtHz	derived	at 21.2 mV bias
Vmax	mVrms	BDA-DRCU-22	
*assumes νlower = 1.02 νcutoff			
**not tested			
***takes best data between 147 Hz and 149 Hz bias			

PRELIMINARY

2/23/2005

Symbol	Units	Value	Value	Value	Value	Value	Value	Value	Value	Value	Value	Value	Value
T0	K	0.3	Base Temperature										
Vn	nV/rtHz	10	Amplifier Voltage Noise										
Q	pW	0	Absorbed Power Onto Bolometer										
NEP_{photon}	1e-17 W/rtHz	0.00	Noise in Absorbed Optical Power										
Vbias	mV	21.2	Bias Across Bolometer & Load Resistors										
Detector ID		**Target**	**R1**	**A8**	**A7**	**A6**	**A9**	**C9**	**B8**	**B7**	**C7**	**B5**	**B6**
Pthermal	pW	4.053	#VALUE!	5.513	4.888	4.881	5.257	4.930	5.365	5.022	5.068	4.984	4.560
Pelec+Q	pW	4.052	#VALUE!	5.513	4.888	4.881	5.257	4.930	5.365	5.022	5.068	4.984	4.560
Tbolo	K	0.38322	#VALUE!	0.36940	0.36186	0.36213	0.36738	0.36340	0.36683	0.36232	0.36341	0.36234	0.35752
T/T0		1.277	#VALUE!	1.231	1.206	1.207	1.225	1.211	1.223	1.208	1.211	1.208	1.192
Rbolo	Ω	6.18E+06	#VALUE!	6.05E+06	4.73E+06	4.88E+06	5.56E+06	4.94E+06	5.83E+06	5.11E+06	5.26E+06	5.19E+06	4.35E+06
Vbolo	mV	5.00	#VALUE!	5.78	4.81	4.88	5.41	4.93	5.59	5.07	5.16	5.08	4.45
Ibolo	nA	0.81	#VALUE!	0.95	1.02	1.00	0.97	1.00	0.96	0.99	0.98	0.98	1.02
A		-5.22	#VALUE!	-5.31	-5.46	-5.40	-5.37	-5.38	-5.33	-5.40	-5.40	-5.39	-5.40
C	pJ/K	1.28	#VALUE!	0.76	0.76	0.79	0.81	0.67	0.64	0.74	0.68	0.68	0.85
G	pW/K	57.8	#VALUE!	92.7	91.1	90.4	90.9	89.9	93.4	92.6	92.4	92.0	90.5
Z/R		0.022	#VALUE!	0.079	0.106	0.108	0.084	0.104	0.090	0.106	0.102	0.107	0.136
τ	ms	14.700	#VALUE!	5.941	5.752	6.102	6.316	5.198	4.880	5.593	5.203	5.193	6.534
Sdc	V/W	5.99E+08	#VALUE!	4.69E+08	4.27E+08	4.32E+08	4.58E+08	4.35E+08	4.59E+08	4.37E+08	4.43E+08	4.40E+08	4.07E+08
$NEP_{johnson}$	1e-17 W/rtHz	0.968	#VALUE!	1.241	1.221	1.228	1.222	1.225	1.249	1.239	1.237	1.239	1.246
NEP_{phonon}	1e-17 W/rtHz	1.811	#VALUE!	2.255	2.217	2.211	2.227	2.206	2.256	2.240	2.236	2.231	2.202
NEP_{load}	1e-17 W/rtHz	0.021	#VALUE!	0.100	0.115	0.119	0.100	0.115	0.112	0.121	0.118	0.123	0.141
NEP_{amp}	1e-17 W/rtHz	1.668	#VALUE!	2.133	2.344	2.315	2.185	2.300	2.177	2.290	2.257	2.271	2.454
NEP_{det}	1e-17 W/rtHz	3.274	#VALUE!	4.157	4.349	4.319	4.185	4.298	4.208	4.314	4.275	4.289	4.477
DQE		0.000	#VALUE!	0.000	0.000	0.000	0.000	0.000	0.000	0.000	0.000	0.000	0.000
Vn(det)	nV/rtHz	19.6	#VALUE!	19.5	18.6	18.7	19.2	18.7	19.3	18.8	18.9	18.9	18.2
Vn(total)	nV/rtHz	19.6	#VALUE!	19.5	18.6	18.7	19.2	18.7	19.3	18.8	18.9	18.9	18.2
Vn(measured) at 1Hz (149 Hz bias)		21.24	16.29	23.18	20.11	21.52	22.27	20.36	21.44	20.44	20.80	20.30	19.49
NEP(measured) at 1 Hz		3.27E-17	#VALUE!	4.94	4.72	4.98	4.87	4.68	4.67	4.68	4.69	4.61	4.78
Vn(measured) at 0.1 Hz (149 Hz Bias)			17.64	25.00	23.85	24.14	25.12	22.64	24.67	24.06	23.95	23.65	21.50
NEP(measured) at 0.1 Hz			#VALUE!	5.33	5.59	5.59	5.49	5.21	5.37	5.51	5.40	5.37	5.28
Vn(measured) at 1 Hz (147 Hz bias)			17.60	22.22	20.12	20.82	22.12	58.93	21.38	20.90	20.63	24.87	19.41
NEP(measured) at 1 Hz (147 Hz bias)				4.74	4.72	4.82	4.83	13.55	4.65	4.79	4.66	5.65	4.76
Vn(measured) at .1 Hz (147 Hz bias)			18.62	25.96	23.23	23.79	25.25	61.35	24.36	22.71	22.54	78.19	21.42
NEP(measured) at 0.1 Hz (147 Hz bias)				5.54	5.45	5.51	5.52	14.11	5.30	5.20	5.09	17.76	5.26

PRELIMINARY

Symbol	Value	Value	Value	Value	Value	Value	Value	Value	Value	Value	Value	Value	Value
T0													
Vn													
Q													
NEP_{photon}													
Vbias													
Detector ID	**A5**	**T1**	**B4**	**C4**	**B3**	**C2**	**B2**	**B1**	**A3**	**A4**	**A1**	**DK1**	**A2**
Pthermal	5.075	#VALUE!	4.883	4.975	4.692	5.122	4.798	5.012	4.989	4.920	5.048	5.058	5.006
Pelec+Q	5.075	#VALUE!	4.883	4.975	4.692	5.122	4.798	5.012	4.989	4.920	5.048	5.058	5.006
Tbolo	0.36261	#VALUE!	0.36042	0.36171	0.35689	0.36027	0.35581	0.35834	0.35925	0.35911	0.35893	0.35957	0.35935
T/T0	1.209	#VALUE!	1.201	1.206	1.190	1.201	1.186	1.194	1.197	1.197	1.196	1.199	1.198
Rbolo	5.35E+06	#VALUE!	5.13E+06	5.16E+06	4.64E+06	5.49E+06	4.78E+06	5.26E+06	5.28E+06	5.00E+06	5.39E+06	5.47E+06	5.32E+06
Vbolo	5.21	#VALUE!	5.01	5.07	4.67	5.30	4.79	5.14	5.13	4.96	5.22	5.26	5.16
Ibolo	0.97	#VALUE!	0.98	0.98	1.01	0.97	1.00	0.98	0.97	0.99	0.97	0.96	0.97
A	-5.41	#VALUE!	-5.46	-5.43	-5.43	-5.45	-5.49	-5.47	-5.46	-5.42	-5.40	-5.44	-5.40
C	0.82	#VALUE!	0.77	0.72	0.75	0.76	0.90	0.74	0.77	0.80	#VALUE!	#VALUE!	1.54
G	93.2	#VALUE!	92.8	92.7	93.9	97.3	97.7	97.9	96.1	95.4	97.6	96.8	96.2
Z/R	0.104	#VALUE!	0.113	0.108	0.136	0.113	0.138	0.122	0.118	0.125	0.125	0.117	0.122
τ	6.192	#VALUE!	5.806	5.475	5.623	5.573	6.501	5.380	5.688	5.934	#VALUE!	#VALUE!	11.464
Sdc	4.45E+08	#VALUE!	4.39E+08	4.39E+08	4.14E+08	4.42E+08	4.13E+08	4.33E+08	4.37E+08	4.25E+08	4.34E+08	4.42E+08	4.35E+08
$NEP_{johnson}$	1.241	#VALUE!	1.237	1.237	1.264	1.267	1.282	1.273	1.261	1.269	1.286	1.268	1.274
NEP_{phonon}	2.248	#VALUE!	2.236	2.238	2.243	2.291	2.285	2.295	2.276	2.264	2.294	2.287	2.278
NEP_{load}	0.121	#VALUE!	0.127	0.123	0.147	0.136	0.155	0.144	0.138	0.142	0.150	0.140	0.144
NEP_{amp}	2.247	#VALUE!	2.276	2.276	2.417	2.261	2.419	2.311	2.288	2.354	2.302	2.262	2.296
NEP_{det}	4.273	#VALUE!	4.296	4.296	4.468	4.327	4.502	4.386	4.343	4.412	4.384	4.327	4.362
DQE	0.000	#VALUE!	0.000	0.000	0.000	0.000	0.000	0.000	0.000	0.000	0.000	0.000	0.000
Vn(det)	19.0	#VALUE!	18.9	18.9	18.5	19.1	18.6	19.0	19.0	18.7	19.0	19.1	19.0
Vn(total)	19.0	#VALUE!	18.9	18.9	18.5	19.1	18.6	19.0	19.0	18.7	19.0	19.1	19.0
Vn(measured) at 1Hz (1	23.45	21.50	21.18	32.38	20.42	21.53	20.15	22.05	26.68	21.03	168.88	23.57	21.84
NEP(measured) at 1 Hz	5.27	#VALUE!	4.82	7.37	4.94	4.87	4.88	5.10	6.10	4.95	38.88	5.33	5.02
Vn(measured) at 0.1 Hz	25.15	30.75	24.67	34.55	30.39	24.68	22.39	27.66	28.94	29.56	172.03	28.89	24.91
NEP(measured) at 0.1 H	5.65	#VALUE!	5.62	7.86	7.35	5.58	5.42	6.39	6.62	6.96	39.60	6.54	5.72
Vn(measured) at 1 Hz (1	22.47	21.16	28.35	32.23	19.63	21.70	20.85	21.76	26.37	21.24	24.69	23.21	21.69
NEP(measured) at 1 Hz	5.05	#VALUE!	6.45	7.33	4.75	4.91	5.04	5.03	6.03	5.00	5.68	5.25	4.98
Vn(measured) at .1 Hz (1	26.35	27.46	146.73	33.22	22.77	26.34	22.63	24.03	31.71	30.04	30.90	29.44	26.63
NEP(measured) at 0.1 H	5.92	#VALUE!	33.40	7.56	5.50	5.96	5.47	5.55	7.25	7.07	7.11	6.66	6.12

PRELIMINARY

Symbol	Value	Value	Value	Value	Value	Value	Value	Value	Value	Value	Value	Value	Value
T0													
Vn													
Q													
NEP_{photon}													
Vbias													
Detector ID	**E1**	**E2**	**E3**	**E4**	**D1**	**D2**	**D3**	**D4**	**C1**	**C3**	**C5**	**T2**	**E5**
Pthermal	5.106	5.230	4.837	5.151	5.216	5.199	5.193	4.880	4.843	5.253	4.714	#VALUE!	4.430
Pelec+Q	5.106	5.230	4.837	5.151	5.216	5.199	5.193	4.880	4.843	5.253	4.714	#VALUE!	4.430
Tbolo	0.36233	0.36190	0.35988	0.36484	0.36124	0.36155	0.36330	0.36168	0.35789	0.36255	0.36084	#VALUE!	0.35847
T/T0	1.208	1.206	1.200	1.216	1.204	1.205	1.211	1.206	1.193	1.208	1.203	#VALUE!	1.195
Rbolo	4.98E+06	5.20E+06	4.51E+06	5.01E+06	5.18E+06	5.06E+06	5.16E+06	4.55E+06	4.53E+06	5.19E+06	4.30E+06	#VALUE!	3.88E+06
Vbolo	5.04	5.22	4.67	5.08	5.20	5.13	5.18	4.71	4.68	5.22	4.50	#VALUE!	4.15
Ibolo	1.01	1.00	1.04	1.01	1.00	1.01	1.00	1.04	1.03	1.01	1.05	#VALUE!	1.07
A	-5.36	-5.43	-5.42	-5.36	-5.47	-5.42	-5.38	-5.35	-5.43	-5.44	-5.41	#VALUE!	-5.40
C	0.71	0.75	0.82	0.95	0.74	0.69	0.67	0.84	0.75	0.68	0.78	#VALUE!	0.78
G	93.7	96.9	92.5	91.8	97.7	96.9	94.8	91.0	95.0	96.9	88.9	#VALUE!	86.7
Z/R	0.107	0.105	0.119	0.096	0.106	0.109	0.104	0.116	0.128	0.103	0.114	#VALUE!	0.130
τ	5.345	5.475	6.125	7.274	5.347	5.029	4.958	6.436	5.491	4.978	5.998	#VALUE!	6.083
Sdc	4.27E+08	4.31E+08	4.11E+08	4.33E+08	4.31E+08	4.25E+08	4.32E+08	4.13E+08	4.07E+08	4.31E+08	4.11E+08	#VALUE!	3.95E+08
$NEP_{johnson}$	1.254	1.262	1.246	1.235	1.262	1.267	1.258	1.245	1.264	1.261	1.219	#VALUE!	1.216
NEP_{phonon}	2.257	2.291	2.233	2.235	2.298	2.290	2.265	2.217	2.262	2.289	2.191	#VALUE!	2.157
NEP_{load}	0.124	0.125	0.129	0.110	0.126	0.128	0.123	0.126	0.139	0.123	0.118	#VALUE!	0.126
NEP_{amp}	2.344	2.318	2.432	2.311	2.322	2.352	2.315	2.420	2.457	2.320	2.436	#VALUE!	2.534
NEP_{det}	4.388	4.383	4.466	4.330	4.391	4.421	4.365	4.445	4.520	4.383	4.434	#VALUE!	4.526
DQE	0.000	0.000	0.000	0.000	0.000	0.000	0.000	0.000	0.000	0.000	0.000	#VALUE!	0.000
Vn(det)	18.7	18.9	18.4	18.7	18.9	18.8	18.8	18.4	18.4	18.9	18.2	#VALUE!	17.9
Vn(total)	18.7	18.9	18.4	18.7	18.9	18.8	18.8	18.4	18.4	18.9	18.2	#VALUE!	17.9
Vn(measured) at 1Hz (14	22.32	22.15	20.21	22.52	20.61	23.91	21.24	25.28	20.92	22.39	19.57	20.37	20.02
NEP(measured) at 1 Hz	5.23	5.14	4.91	5.21	4.79	5.62	4.92	6.12	5.14	5.19	4.77	#VALUE!	5.07
Vn(measured) at 0.1 Hz	40.67	47.89	24.58	31.59	26.37	29.09	26.80	60.05	24.93	27.19	23.30	30.62	23.98
NEP(measured) at 0.1 H	9.53	11.10	5.98	7.30	6.12	6.84	6.21	14.53	6.13	6.31	5.68	#VALUE!	6.08
Vn(measured) at 1 Hz (1	20.33	22.01	20.08	22.47	20.51	24.82	21.10	45.84	20.91	22.71	19.51	20.69	19.80
NEP(measured) at 1 Hz	4.77	5.10	4.88	5.19	4.76	5.84	4.89	11.09	5.14	5.27	4.75	#VALUE!	5.02
Vn(measured) at .1 Hz (1	24.03	26.86	26.80	30.74	24.23	29.93	26.03	299.16	22.91	26.25	22.31	27.14	23.43
NEP(measured) at 0.1 H	5.63	6.23	6.52	7.10	5.63	7.04	6.03	72.39	5.63	6.09	5.43	#VALUE!	5.94

PRELIMINARY

Symbol	Value	Value	Value	Value	Value	Value	Value	Value	Value	Value	Value
T0											
Vn											
Q											
NEP_{photon}											
Vbias											
Detector ID	**C6**	**C8**	**D5**	**D6**	**D7**	**D8**	**E7**	**E6**	**E8**	**DK2**	**E9**
Pthermal	4.402	4.941	5.025	4.910	5.131	4.749	5.175	5.107	4.933	5.104	5.086
Pelec+Q	4.402	4.941	5.025	4.910	5.131	4.749	5.175	5.107	4.933	5.104	5.086
Tbolo	0.35932	0.36412	0.36525	0.36245	0.36529	0.36083	0.36701	0.36540	0.36485	0.36622	0.36570
T/T0	1.198	1.214	1.218	1.208	1.218	1.203	1.223	1.218	1.216	1.221	1.219
Rbolo	3.83E+06	4.69E+06	4.83E+06	4.63E+06	5.03E+06	4.33E+06	5.15E+06	5.02E+06	4.72E+06	5.03E+06	4.98E+06
Vbolo	4.11	4.81	4.93	4.77	5.08	4.54	5.16	5.06	4.83	5.07	5.03
Ibolo	1.07	1.03	1.02	1.03	1.01	1.05	1.00	1.01	1.02	1.01	1.01
A	-5.38	-5.43	-5.33	-5.44	-5.42	-5.43	-5.33	-5.36	-5.38	-5.38	-5.37
C	0.96	0.86	0.67	0.93	0.68	0.68	0.70	#VALUE!	0.95	#VALUE!	0.85
G	85.5	89.3	89.2	90.9	91.4	89.9	89.9	90.7	88.2	89.7	89.8
Z/R	0.129	0.096	0.098	0.105	0.091	0.114	0.090	0.096	0.096	0.089	0.092
τ	7.657	6.640	5.196	7.063	5.173	5.206	5.439	#VALUE!	7.440	#VALUE!	6.564
Sdc	3.94E+08	4.28E+08	4.30E+08	4.22E+08	4.37E+08	4.10E+08	4.41E+08	4.35E+08	4.30E+08	4.40E+08	4.37E+08
$NEP_{johnson}$	1.212	1.209	1.225	1.223	1.221	1.223	1.225	1.229	1.209	1.215	1.219
NEP_{phonon}	2.139	2.199	2.203	2.215	2.226	2.200	2.214	2.219	2.188	2.209	2.211
NEP_{load}	0.124	0.104	0.109	0.114	0.104	0.119	0.103	0.109	0.105	0.101	0.104
NEP_{amp}	2.538	2.336	2.327	2.370	2.287	2.437	2.265	2.297	2.326	2.274	2.291
NEP_{det}	4.520	4.324	4.326	4.376	4.292	4.442	4.265	4.304	4.308	4.265	4.287
DQE	0.000	0.000	0.000	0.000	0.000	0.000	0.000	0.000	0.000	0.000	0.000
Vn(det)	17.8	18.5	18.6	18.5	18.8	18.2	18.8	18.7	18.5	18.8	18.7
Vn(total)	17.8	18.5	18.6	18.5	18.8	18.2	18.8	18.7	18.5	18.8	18.7
Vn(measured) at 1Hz (14	20.71	19.99	19.97	22.59	27.58	19.97	25.42	28.11	22.34	21.09	22.12
NEP(measured) at 1 Hz	5.26	4.67	4.65	5.35	6.31	4.87	5.76	6.46	5.20	4.80	5.07
Vn(measured) at 0.1 Hz	22.40	22.25	24.46	28.96	29.36	23.71	33.40	44.01	30.65	32.50	32.44
NEP(measured) at 0.1 H	5.68	5.20	5.69	6.86	6.71	5.78	7.57	10.11	7.13	7.39	7.43
Vn(measured) at 1 Hz (1	20.77	20.31	108.52	21.14	21.09	20.49	24.12	27.69	21.72	21.11	21.67
NEP(measured) at 1 Hz	5.27	4.74	25.26	5.01	4.82	4.99	5.46	6.36	5.05	4.80	4.96
Vn(measured) at .1 Hz (1	22.36	23.13	110.08	25.87	25.00	22.73	31.84	42.04	28.69	32.53	30.06
NEP(measured) at 0.1 H	5.68	5.40	25.62	6.13	5.72	5.54	7.21	9.65	6.67	7.40	6.88

PRELIMINARY

Symbol	Parameter	Equation (or Comments)
T0		
Vn		
Q		
NEP_{photon}		
Vbias		
Detector ID		
Pthermal	Power as function of Temperature	$P_{thermal} = [G300/(1+\beta)][T/0.3]^{\beta}T$ evaluated from To to Tb
Pelec+Q	Electrical + Absorbed Power	$P_e + Q = [V_{bias}/(2R_L + R_B)]^2R_B + Q$
Tbolo	Bolometer Temperature	Solve for Tb using Newtonian recursion such that $P_{thermal} = P_e + Q$
T/T0		T/To = Tbolo/To
Rbolo	Bolometer Resistance	$Rbolo = (Ro)exp[(\Delta/Tb)^{1/2}]$
Vbolo	Voltage across Bolometer	$Vbolo = [Vbias/(2R_L + R_B)]R_B$
Ibolo	Current through Bolometer	$Ibolo = Vbias/(2R_L + R_B)$
A		$A = (T/R)(dR/dT) = -(1/2)[(\Delta/Tb)^{1/2}]$
C	Dynamic Heat Capacity	$C = C300[(T/0.3)^{\gamma}]$
G	Dynamic Thermal Conductance	$G = G300[(T/0.3)^{\beta}]$
Z/R		$Z/R = (I/V)(dV/dI) = [-1 - GTb/(P_eA)] / [1 - GTb/(P_eA)]$
τ	Electrical Time Constant	$\tau = [C/2G][(Z/R + 1)(1 + 2R_L/R_B)] / [Z/R + 2R_L/R_B]$
Sdc	Electrical Responsivity at 0 Hz	$Sdc = (1/2)[R_B/P_e]^{1/2} [1 - Z/R] / [1 + (Z/R)(R_B/2R_L)$
$NEP_{johnson}$	Johnson Noise Prior to Demodulation	$NEP_{johnson} = [(4k(Tb)^3G^2)/(P_eA^2)]^{1/2}$
NEP_{phonon}	Phonon Noise Prior to Demodulation	$=\{[(4kTo^2G)(\beta+1)((T/To)^{2\beta+3}-1)]/[(2\beta+3)(T/To)^{\beta}((T/To)^{\beta+1}-1)]\}^{1/2}$
NEP_{load}	Johnson Noise from R_L Prior to Demod.	$NEP_{load} = [4kTo/2R_L]^{1/2} \lvert 2(Z/R)R_BIbolo/[(Z/R) - 1]\rvert$
NEP_{amp}	Amplifier Noise Prior to Demodulation	$NEP_{amp} = Vn / Sdc$
NEP_{det}	Detector Noise after Demodulation	$NEP_{det} = [2NEP_{john}^2+NEP_{phon}^2+2NEP_{load}^2+2NEP_{amp}^2]^{1/2}$
DQE	BLIP Figure-of-Merit for Detector	$DQE = NEP_{photon}^2 / (NEP_{photon}^2 + NEP_{det}^2)$
Vn(det)	Voltage Noise of Detector After Demod.	$Vn(det) = NEP_{det}Sdc$
Vn(total)	Total Noise after Demodulation	$Vn(total) = [NEP_{det}^2 + NEP_{photon}^2]^{1/2}Sdc$
Vn(measured) at 1Hz (14		
NEP(measured) at 1 Hz		
Vn(measured) at 0.1 Hz		
NEP(measured) at 0.1 H		
Vn(measured) at 1 Hz (1		
NEP(measured) at 1 Hz		
Vn(measured) at .1 Hz (1		
NEP(measured) at 0.1 H		

PRELIMINARY

2/23/2005

Symbol	Units	Value	Value	Value	Value	Value	Value	Value	Value	Value	Value	Value	Value	Value	Value
T0	K	0.3	Base Temperature												
Vn	nV/rtHz	10	Amplifier Voltage Noise												
Q	pW	2.5	Absorbed Power Onto Bolometer												
NEP_{photon}	1e-17 W/rtHz	4.60	Noise in Absorbed Optical Power												
Vbias	mV	16	Bias Across Bolometer & Load Resistors												
Detector ID		**Target**	**R1**	**A8**	**A7**	**A6**	**A9**	**C9**	**B8**	**B7**	**C7**	**B5**	**B6**	**A5**	**T1**
Pthermal	pW	4.644	#VALUE!	5.617	5.205	5.202	5.449	5.234	5.521	5.295	5.326	5.271	4.991	5.331	#VALUE!
Pelec+Q	pW	4.644	#VALUE!	5.617	5.205	5.202	5.449	5.234	5.521	5.295	5.325	5.271	4.991	5.331	#VALUE!
Tbolo	K	0.39327	#VALUE!	0.37053	0.36532	0.36565	0.36949	0.36676	0.36849	0.36525	0.36618	0.36545	0.36224	0.36534	#VALUE!
T/T0		1.311	#VALUE!	1.235	1.218	1.219	1.232	1.223	1.228	1.218	1.221	1.218	1.207	1.218	#VALUE!
Rbolo	Ω	5.40E+06	#VALUE!	5.95E+06	4.49E+06	4.63E+06	5.39E+06	4.70E+06	5.69E+06	4.90E+06	5.05E+06	4.95E+06	4.06E+06	5.14E+06	#VALUE!
Vbolo	mV	3.40	#VALUE!	4.31	3.48	3.54	3.99	3.58	4.15	3.70	3.78	3.70	3.18	3.81	#VALUE!
Ibolo	nA	0.63	#VALUE!	0.72	0.78	0.76	0.74	0.76	0.73	0.76	0.75	0.75	0.78	0.74	#VALUE!
A		-5.15	#VALUE!	-5.30	-5.43	-5.37	-5.35	-5.36	-5.32	-5.38	-5.38	-5.37	-5.37	-5.39	#VALUE!
C	pJ/K	1.31	#VALUE!	0.77	0.76	0.80	0.82	0.68	0.64	0.74	0.69	0.68	0.86	0.82	#VALUE!
G	pW/K	60.0	#VALUE!	93.1	92.5	91.8	91.7	91.3	94.1	93.8	93.5	93.2	92.4	94.3	#VALUE!
Z/R		0.362	#VALUE!	0.353	0.394	0.396	0.365	0.391	0.367	0.390	0.385	0.392	0.429	0.386	#VALUE!
τ	ms	4.000	#VALUE!	6.747	6.623	7.011	7.215	5.971	5.548	6.405	5.951	5.942	7.532	7.072	#VALUE!
Sdc	V/K	4.61E+08	#VALUE!	3.96E+08	3.52E+08	3.55E+08	3.83E+08	3.59E+08	3.85E+08	3.61E+08	3.67E+08	3.63E+08	3.29E+08	3.69E+08	#VALUE!
$NEP_{johnson}$	1e-17 W/rtHz	1.458	#VALUE!	1.668	1.699	1.708	1.666	1.700	1.691	1.710	1.702	1.713	1.768	1.707	#VALUE!
NEP_{phonon}	1e-17 W/rtHz	1.867	#VALUE!	2.263	2.242	2.236	2.242	2.230	2.268	2.261	2.256	2.253	2.235	2.267	#VALUE!
NEP_{load}	1e-17 W/rtHz	0.352	#VALUE!	0.475	0.459	0.468	0.462	0.465	0.484	0.477	0.476	0.480	0.481	0.483	#VALUE!
NEP_{amp}	1e-17 W/rtHz	2.169	#VALUE!	2.526	2.843	2.815	2.610	2.788	2.596	2.767	2.723	2.752	3.039	2.712	#VALUE!
NEP_{det}	1e-17 W/rtHz	4.171	#VALUE!	4.889	5.234	5.208	4.962	5.171	4.981	5.169	5.115	5.153	5.494	5.113	#VALUE!
DQE		0.549	#VALUE!	0.470	0.436	0.438	0.462	0.442	0.460	0.442	0.447	0.444	0.412	0.447	#VALUE!
Vn(det)	nV/rtHz	19.2	#VALUE!	19.4	18.4	18.5	19.0	18.5	19.2	18.7	18.8	18.7	18.1	18.9	#VALUE!
Vn(total)	nV/rtHz	28.6	#VALUE!	26.6	24.5	24.7	25.9	24.8	26.1	25.0	25.3	25.1	23.6	25.4	#VALUE!
Measured															
Q_incident	1.16E-11														
NEP_photon	9.69E-17														
Q_absorbed			N/A	8.932E-12	9.081E-12	8.347E-12	9.38E-12	9.055E-12	8.731E-12	8.583E-12	8.372E-12	8.456E-12	8.71E-12	8.771E-12	#VALUE!
NEP_photon			N/A	8.495E-17	8.566E-17	8.212E-17	8.705E-17	8.553E-17	8.399E-17	8.327E-17	8.225E-17	8.265E-17	8.389E-17	8.418E-17	#VALUE!
Vn(total, gain = 57300)			0.0015366	0.0015366	0.0015366	0.0015366	0.0015366	0.0015366	0.0024331	0.0024331	0.0024331	0.0024331	0.0024331	0.0024331	0.0024331
Vn(total)		2.8719E-08	2.682E-08	2.682E-08	2.682E-08	2.682E-08	2.682E-08	2.682E-08	4.246E-08	4.246E-08	4.246E-08	4.246E-08	4.246E-08	4.246E-08	4.246E-08
Sdc			N/M	1.75E+08	1.75E+08	1.75E+08	1.75E+08	1.75E+08	1.75E+08	1.75E+08	1.75E+08	1.75E+08	1.75E+08	1.75E+08	1.75E+08
NEP(total)			N/M	1.531E-16	1.531E-16	1.531E-16	1.531E-16	1.531E-16	2.424E-16	2.424E-16	2.424E-16	2.424E-16	2.424E-16	2.424E-16	2.424E-16
DQE		#VALUE!	N/M	0.31	0.31	0.29	0.32	0.31	0.12	0.12	0.12	0.12	0.12	0.12	#VALUE!

PRELIMINARY

Symbol	Value	Value	Value	Value	Value	Value	Value	Value	Value	Value	Value	Value	Value	Value	Value
T0															
Vn															
Q															
NEP_{photon}															
Vbias															
Detector ID	**B4**	**C4**	**B3**	**C2**	**B2**	**B1**	**A3**	**A4**	**A1**	**DK1**	**A2**	**E1**	**E2**	**E3**	**E4**
Pthermal	5.205	5.265	5.080	5.364	5.151	5.291	5.276	5.230	5.316	5.322	5.288	5.350	5.432	5.172	5.379
Pelec+Q	5.205	5.265	5.080	5.363	5.151	5.291	5.276	5.230	5.316	5.322	5.288	5.350	5.432	5.172	5.379
Tbolo	0.36386	0.36482	0.36099	0.36274	0.35940	0.36117	0.36222	0.36233	0.36166	0.36228	0.36226	0.36492	0.36398	0.36348	0.36730
T/T0	1.213	1.216	1.203	1.209	1.198	1.204	1.207	1.208	1.206	1.208	1.208	1.216	1.213	1.212	1.224
Rbolo	4.87E+06	4.93E+06	4.36E+06	5.29E+06	4.53E+06	5.04E+06	5.05E+06	4.76E+06	5.18E+06	5.26E+06	5.10E+06	4.80E+06	5.04E+06	4.27E+06	4.83E+06
Vbolo	3.63	3.69	3.35	3.89	3.46	3.75	3.74	3.61	3.82	3.85	3.77	3.70	3.84	3.38	3.73
Ibolo	0.75	0.75	0.77	0.74	0.77	0.74	0.74	0.76	0.74	0.73	0.74	0.77	0.76	0.79	0.77
A	-5.43	-5.41	-5.40	-5.43	-5.46	-5.45	-5.43	-5.40	-5.38	-5.42	-5.38	-5.34	-5.41	-5.39	-5.34
C	0.77	0.73	0.76	0.76	0.91	0.74	0.78	0.81	#VALUE!	#VALUE!	1.56	0.72	0.75	0.82	0.96
G	94.2	94.0	95.6	98.3	99.3	99.1	97.3	96.8	98.8	98.0	97.4	94.8	97.7	94.0	92.8
Z/R	0.400	0.393	0.425	0.393	0.423	0.403	0.401	0.409	0.405	0.398	0.404	0.388	0.383	0.407	0.378
τ	6.645	6.266	6.452	6.342	7.435	6.131	6.489	6.782	#VALUE!	#VALUE!	13.059	6.125	6.254	7.052	8.347
Sdc	3.60E+08	3.63E+08	3.36E+08	3.66E+08	3.38E+08	3.57E+08	3.60E+08	3.49E+08	3.58E+08	3.65E+08	3.59E+08	3.55E+08	3.61E+08	3.38E+08	3.62E+08
$NEP_{johnson}$	1.719	1.712	1.776	1.737	1.788	1.755	1.741	1.760	1.769	1.744	1.757	1.720	1.720	1.737	1.692
NEP_{phonon}	2.260	2.260	2.272	2.309	2.311	2.315	2.297	2.287	2.314	2.306	2.299	2.275	2.306	2.258	2.252
NEP_{load}	0.483	0.479	0.497	0.505	0.511	0.509	0.501	0.501	0.520	0.509	0.511	0.478	0.487	0.472	0.463
NEP_{amp}	2.775	2.758	2.975	2.729	2.963	2.803	2.777	2.865	2.792	2.741	2.788	2.815	2.771	2.958	2.766
NEP_{det}	5.185	5.162	5.447	5.173	5.460	5.268	5.221	5.323	5.267	5.190	5.247	5.235	5.203	5.392	5.151
DQE	0.440	0.443	0.416	0.442	0.415	0.433	0.437	0.427	0.433	0.440	0.435	0.436	0.439	0.421	0.444
Vn(det)	18.7	18.7	18.3	19.0	18.4	18.8	18.8	18.6	18.9	18.9	18.8	18.6	18.8	18.2	18.6
Vn(total)	25.0	25.1	24.0	25.4	24.1	25.0	25.1	24.6	25.0	25.3	25.0	24.8	25.1	24.0	25.0
Measured															
Q_incident															
NEP_photon															
Q_absorbed	8.713E-12	8.655E-12	8.553E-12	9.119E-12	8.889E-12	9.387E-12	9.291E-12	9.044E-12	9.695E-12	6.503E-13	9.341E-12	9.03504E-12	8.9392E-12	8.5044E-12	8.164E-12
NEP_photon	8.39E-17	8.362E-17	8.313E-17	8.584E-17	8.474E-17	8.709E-17	8.664E-17	8.548E-17	8.85E-17	2.292E-17	8.687E-17	8.54393E-17	8.4985E-17	8.2893E-17	8.122E-17
Vn(total, gain	0.0024331	0.0024331	0.0024331	0.0024331	0.0024331	0.0024331	0.0024331	0.0024331	0.0024331	0.0024331	1.0024331	0.001645615	0.00164562	0.0013961	0.0016456
Vn(total)	4.246E-08	4.246E-08	4.246E-08	4.246E-08	4.246E-08	4.246E-08	4.246E-08	4.246E-08	4.246E-08	4.246E-08	1.749E-05	2.87193E-08	2.8719E-08	2.4365E-08	2.872E-08
Sdc	1.75E+08	1.75E+08	1.75E+08	1.75E+08	1.75E+08	1.75E+08	1.75E+08	1.75E+08	1.75E+08	1.75E+08	1.75E+08	1.81E+08	1.81E+08	1.62E+08	1.81E+08
NEP(total)	2.424E-16	2.424E-16	2.424E-16	2.424E-16	2.424E-16	2.424E-16	2.424E-16	2.424E-16	2.424E-16	2.424E-16	9.988E-14	1.58817E-16	1.5882E-16	1.5011E-16	1.588E-16
DQE	0.12	0.12	0.12	0.13	0.12	0.13	0.13	0.12	0.13	0.01	0.00	0.29	0.29	0.30	0.26

PRELIMINARY

Symbol	Value	Value	Value	Value	Value	Value	Value	Value	Value	Value	Value	Value
T0												
Vn												
Q												
NEP_{photon}												
Vbias												
Detector ID	**D1**	**D2**	**D3**	**D4**	**C1**	**C3**	**C5**	**T2**	**E5**	**C6**	**C8**	**D5**
Pthermal	5.423	5.411	5.408	5.200	5.178	5.447	5.089	#VALUE!	4.901	4.882	5.239	5.295
Pelec+Q	5.422	5.411	5.407	5.200	5.178	5.447	5.089	#VALUE!	4.901	4.882	5.239	5.295
Tbolo	0.36335	0.36374	0.36555	0.36518	0.36138	0.36454	0.36502	#VALUE!	0.36384	0.36487	0.36743	0.36826
T/T0	1.211	1.212	1.219	1.217	1.205	1.215	1.217	#VALUE!	1.213	1.216	1.225	1.228
Rbolo	5.02E+06	4.90E+06	4.99E+06	4.32E+06	4.30E+06	5.04E+06	4.04E+06	#VALUE!	3.58E+06	3.53E+06	4.46E+06	4.63E+06
Vbolo	3.83	3.78	3.81	3.42	3.39	3.85	3.24	#VALUE!	2.93	2.90	3.50	3.60
Ibolo	0.76	0.77	0.76	0.79	0.79	0.76	0.80	#VALUE!	0.82	0.82	0.78	0.78
A	-5.45	-5.40	-5.37	-5.32	-5.41	-5.42	-5.38	#VALUE!	-5.36	-5.34	-5.40	-5.30
C	0.74	0.69	0.67	0.85	0.75	0.69	0.79	#VALUE!	0.79	0.98	0.87	0.67
G	98.6	97.8	95.8	92.4	96.5	97.8	90.6	#VALUE!	88.8	87.7	90.6	90.3
Z/R	0.384	0.387	0.383	0.403	0.413	0.381	0.407	#VALUE!	0.430	0.431	0.385	0.384
τ	6.108	5.749	5.668	7.409	6.313	5.686	6.941	#VALUE!	7.071	8.904	7.660	5.978
Sdc	3.60E+08	3.55E+08	3.61E+08	3.41E+08	3.35E+08	3.61E+08	3.36E+08	#VALUE!	3.17E+08	3.16E+08	3.55E+08	3.57E+08
$NEP_{johnson}$	1.721	1.729	1.719	1.733	1.760	1.718	1.713	#VALUE!	1.743	1.742	1.677	1.692
NEP_{phonon}	2.313	2.305	2.282	2.242	2.287	2.303	2.219	#VALUE!	2.194	2.178	2.223	2.224
NEP_{load}	0.487	0.487	0.482	0.470	0.486	0.484	0.452	#VALUE!	0.451	0.448	0.445	0.456
NEP_{amp}	2.778	2.814	2.773	2.936	2.989	2.770	2.977	#VALUE!	3.151	3.163	2.820	2.802
NEP_{det}	5.214	5.255	5.192	5.359	5.456	5.198	5.379	#VALUE!	5.581	5.588	5.184	5.175
DQE	0.438	0.434	0.440	0.424	0.416	0.439	0.422	#VALUE!	0.405	0.404	0.441	0.441
Vn(det)	18.8	18.7	18.7	18.3	18.3	18.8	18.1	#VALUE!	17.7	17.7	18.4	18.5
Vn(total)	25.0	24.8	25.0	24.1	23.9	25.1	23.8	#VALUE!	23.0	22.9	24.6	24.7
Measured												
Q_incident												
NEP_photon												
Q_absorbed	9.11373E-12	8.74499E-12	8.481E-12	8.59988E-12	9.66633E-12	8.80058E-12	9.0358E-12	#VALUE!	9.04702E-12	9.49755E-12	8.81097E-12	8.66908E-12
NEP_photon	8.58106E-17	8.40568E-17	8.27783E-17	8.33564E-17	8.83738E-17	8.43235E-17	8.5443E-17	#VALUE!	8.5496E-17	8.75989E-17	8.43732E-17	8.36911E-17
Vn(total, gain	0.001645615	0.00159327	0.001588958	0.001467292	0.001561383	0.001751086	0.001630229	0.001908874	0.001672062	0.001806447	0.002212419	0.001843819
Vn(total)	2.87193E-08	2.78058E-08	2.77305E-08	2.56072E-08	2.72493E-08	3.056E-08	2.84508E-08	3.33137E-08	2.91808E-08	3.15261E-08	3.86112E-08	3.21783E-08
Sdc	1.81E+08	1.68E+08	1.69E+08	1.64E+08	1.75E+08	2.18E+08	1.78E+08	2.05E+08	1.72E+08	2.03E+08	1.74E+08	2.00E+08
NEP(total)	1.58817E-16	1.65579E-16	1.64367E-16	1.55905E-16	1.55514E-16	1.39877E-16	1.6027E-16	1.62547E-16	1.69769E-16	1.54939E-16	2.22E-16	1.60983E-16
DQE	0.29	0.26	0.25	0.29	0.32	0.36	0.28	#VALUE!	0.25	0.32	0.14	0.27

PRELIMINARY

Symbol	Value	Value	Value	Value	Value	Value	Value	Value	Parameter
T0									
Vn									
Q									
NEP_{photon}									
Vbias									
Detector ID	**D6**	**D7**	**D8**	**E7**	**E6**	**E8**	**DK2**	**E9**	
Pthermal	5.219	5.366	5.112	5.395	5.350	5.234	5.347	5.336	Power as function of Temperature
Pelec+Q	5.219	5.365	5.112	5.394	5.350	5.234	5.347	5.335	Electrical + Absorbed Power
Tbolo	0.36582	0.36784	0.36484	0.36945	0.36806	0.36823	0.36892	0.36846	Bolometer Temperature
T/T0	1.219	1.226	1.216	1.231	1.227	1.227	1.230	1.228	
Rbolo	4.40E+06	4.84E+06	4.08E+06	4.97E+06	4.83E+06	4.49E+06	4.84E+06	4.78E+06	Bolometer Resistance
Vbolo	3.46	3.73	3.27	3.79	3.71	3.51	3.71	3.68	Voltage across Bolometer
Ibolo	0.79	0.77	0.80	0.76	0.77	0.78	0.77	0.77	Current through Bolometer
A	-5.41	-5.40	-5.40	-5.31	-5.34	-5.35	-5.36	-5.35	
C	0.94	0.68	0.69	0.70	#VALUE!	0.96	#VALUE!	0.85	Dynamic Heat Capacity
G	92.3	92.4	91.5	90.8	91.7	89.6	90.8	90.9	Dynamic Thermal Conductance
Z/R	0.393	0.375	0.406	0.372	0.379	0.385	0.374	0.377	
τ	8.139	5.940	6.017	6.238	#VALUE!	8.580	#VALUE!	7.544	Electrical Time Constant
Sdc	3.49E+08	3.65E+08	3.36E+08	3.69E+08	3.63E+08	3.56E+08	3.67E+08	3.64E+08	Electrical Responsivity at 0 Hz
$NEP_{johnson}$	1.700	1.676	1.716	1.678	1.689	1.680	1.671	1.678	Johnson Noise Prior to Demodulation
NEP_{phonon}	2.239	2.245	2.228	2.231	2.238	2.212	2.228	2.230	Phonon Noise Prior to Demodulation
NEP_{load}	0.456	0.455	0.455	0.457	0.461	0.447	0.451	0.453	Johnson Noise from R_L Prior to Demod.
NEP_{amp}	2.868	2.739	2.973	2.710	2.756	2.812	2.727	2.749	Amplifier Noise Prior to Demodulation
NEP_{det}	5.259	5.106	5.380	5.070	5.132	5.171	5.082	5.112	Detector Noise after Demodulation
DQE	0.433	0.448	0.422	0.451	0.446	0.442	0.450	0.447	BLIP Figure-of-Merit for Detector
Vn(det)	18.3	18.6	18.1	18.7	18.6	18.4	18.6	18.6	Voltage Noise of Detector After Demod.
Vn(total)	24.4	25.1	23.8	25.3	25.0	24.6	25.1	25.0	Total Noise after Demodulation
Measured									
Q_incident									
NEP_photon									
Q_absorbed	8.51774E-12	8.25635E-12	8.912E-12	8.799E-12	#VALUE!	8.939E-12	6.503E-13	9.341E-12	
NEP_photon	8.29574E-17	8.16746E-17	8.485E-17	8.431E-17	#VALUE!	8.498E-17	2.292E-17	8.687E-17	
Vn(total, gain	0.003067526	0.001578476	0.0021829	0.0021829	0.0024331	0.0015758	0.0015971	0.0015971	
Vn(total)	5.35345E-08	2.75476E-08	3.81E-08	3.81E-08	4.246E-08	2.75E-08	2.787E-08	2.787E-08	
Sdc	1.68E+08	1.74E+08	2.34E+08	2.34E+08	1.75E+08	1.67E+08	1.61E+08	1.61E+08	
NEP(total)	3.18569E-16	1.58073E-16	1.63E-16	1.63E-16	2.424E-16	1.645E-16	1.735E-16	1.735E-16	
DQE	0.07	0.27	0.27	0.27	#VALUE!	0.27	0.02	0.25	

PRELIMINARY

Symbol	Equation (or Comments)
T0	
Vn	
Q	
NEP_{photon}	
Vbias	
Detector ID	
Pthermal	$P_{thermal} = [G300/(1+\beta)][T/0.3]^{\beta}T$ evaluated from To to Tb
Pelec+Q	$P_e + Q = [V_{bias}/(2R_L + R_B)]^2 R_B + Q$
Tbolo	Solve for Tb using Newtonian recursion such that $P_{thermal} = P_e + Q$
T/T0	T/To = Tbolo/To
Rbolo	$Rbolo = (Ro)\exp[(\Delta/Tb)^{1/2}]$
Vbolo	$Vbolo = [Vbias/(2R_L + R_B)]R_B$
Ibolo	$Ibolo = Vbias/(2R_L + R_B)$
A	$A = (T/R)(dR/dT) = -(1/2)[(\Delta/Tb)^{1/2}]$
C	$C = C300[(T/0.3)^{\gamma}]$
G	$G = G300[(T/0.3)^{\beta}]$
Z/R	$Z/R = (I/V)(dV/dI) = [-1 - GTb/(P_eA)] / [1 - GTb/(P_eA)]$
τ	$\tau = [C/2G][(Z/R + 1)(1 + 2R_L/R_B)] / [Z/R + 2R_L/R_B]$
Sdc	$Sdc = (1/2)[R_B/P_e]^{1/2} [1 - Z/R] / [1 + (Z/R)(R_B/2R_L)$
$NEP_{johnson}$	$NEP_{johnson} = [(4k(Tb)^3G^2)/(P_eA^2)]^{1/2}$
NEP_{phonon}	$=\{[(4kTo^2G)(\beta+1)((T/To)^{2\beta+3}-1)]/[(2\beta+3)(T/To)^{\beta}((T/To)^{\beta+1}-1)]\}^{1/2}$
NEP_{load}	$NEP_{load} = [4kTo/2R_L]^{1/2} \lvert 2(Z/R)R_B Ibolo/[(Z/R) - 1]\rvert$
NEP_{amp}	$NEP_{amp} = Vn / Sdc$
NEP_{det}	$NEP_{det} = [2NEP_{john}^2+NEP_{phon}^2+2NEP_{load}^2+2NEP_{amp}^2]^{1/2}$
DQE	$DQE = NEP_{photon}^2 / (NEP_{photon}^2 + NEP_{det}^2)$
Vn(det)	$Vn(det) = NEP_{det}Sdc$
Vn(total)	$Vn(total) = [NEP_{det}^2 + NEP_{photon}^2]^{1/2}Sdc$
Measured	
Q_incident	
NEP_photon	
Q_absorbed	
NEP_photon	
Vn(total, gain	
Vn(total)	
Sdc	
NEP(total)	
DQE	

EIDP Coverpage For QM PLW BDA

Unit Identfication								
Name	:	QM PLW BDA						
Part #	:	10209800 -8						
S/N	:	#007						

Environmemtal Testing							
	Axes Tested	Temperature	Duration or Number of Cycles	Pass/Fail	Requirement	Source	Waiver #
Random Vibration Test	X, Y, Z	100 K	2 min per axis	P	X, Y, Z at 90 K 1 min per axis	SSSD Sec # 3.4	HR-SP-JPL-RFW-006
High Level Sine Vibe Test	None	NA	NA	NA	X, Y, Z at 90 K	SSSD Sec # 3.4	HR-SP-JPL-RFW-005
Bakeout	NA	80 C	5 days as part of the assembly procedures	P	None (other than as part of the assembly procedure)	D-20549	
Thermal Cycles	NA	RoomT to ~ < 10 K	27	P	Min15 from RmT to < 77 K	D-20549	

Other Testing							
	Frequency (Hz)		Note		Minimum Performance	Source	Waiver #
Lowest Resonant Frequency (X-axis)	283 Hz		Cold		> 200 Hz (Goal: >250 Hz)	SSSD Sec # 3.1.3	NA
Lowest Resonant Frequency (Y-axis)	281 Hz		Cold		> 200 Hz (Goal: >250 Hz)	SSSD Sec # 3.1.3	NA
Lowest Resonant Frequency (Z-axis)	276 Hz		Cold		> 200 Hz (Goal: >250 Hz)	SSSD Sec # 3.1.3	NA
Metrology Measurements were performed before and after the Vibration Test and the Thermal Cycles							
	Motion in X/Y	Motion in Z		Meets Goal ?	Performance Goal	Source	Waiver #
Maximum motion due to Random Vibration Test 1st axis (X)	21 μm	40 μm		Y	125 μm in X/Y and 500 μm in Z	SSSD Sec # 3.1.1	NA
Maximum motion due to Random Vibration Test 2nd axis (Y)	22 μm	8.6 μm		Y	125 μm in X/Y and 500 μm in Z	SSSD Sec # 3.1.1	NA
Maximum motion due to Random Vibration Test 3rd axis (Z)	9.5 μm	11 μm		Y	125 μm in X/Y and 500 μm in Z	SSSD Sec # 3.1.1	NA
Cumulative Maximum motion	34 μm	56 μm		Y	125 μm in X/Y and 500 μm in Z	SSSD Sec # 3.1.1	NA
Cold Continuity Measurements : In Process							
				Pass/Fail	Requirement	Source	Waiver #
Cold Continuity Test (1st Thermal Cycle)				P	None	NA	NA
Cold Continuity Test (2nd Thermal Cycle)				P	None	NA	NA

QM BDA Random Vibration Test

P/N 10209800-8

S/N 007

X-axis Shake, Cold, Sine Surveys (Before and After 0 dB Random Vibe)

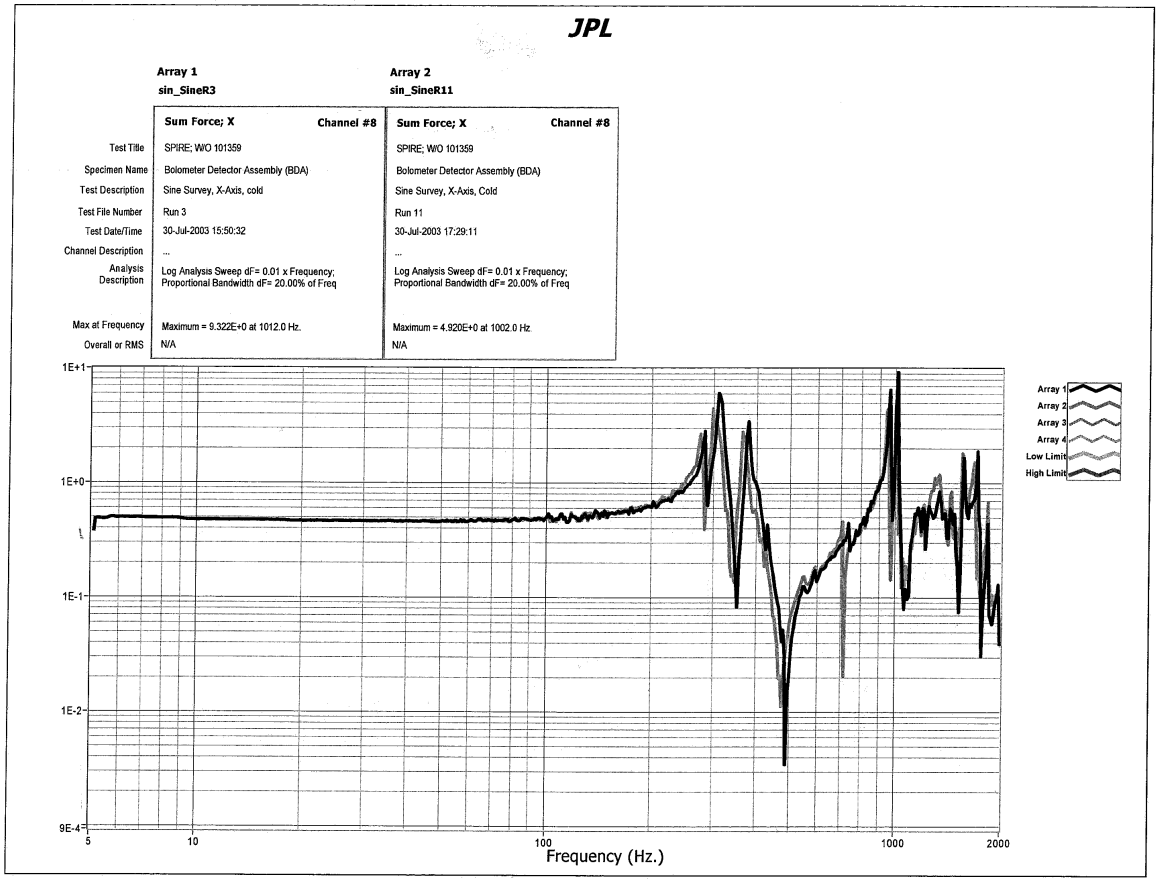

Y-axis Shake, Cold, Sine Surveys (Before and After 0 dB Random Vibe)

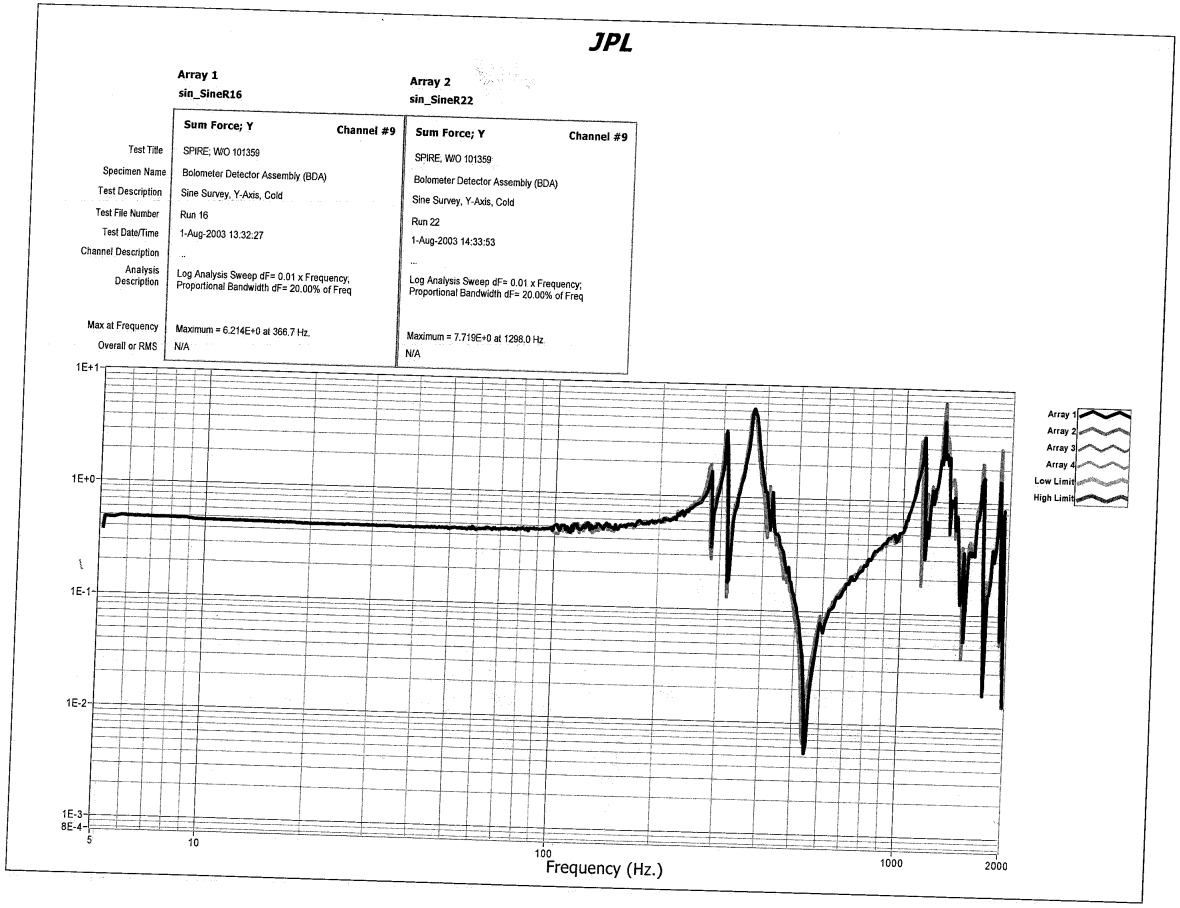

Z-axis Shake, Cold, Sine Surveys (Before and After 0 dB Random Vibe)

JPL

	Array 1 sin_SineR29	Array 2 sin_SineR35
	Sum Force; Z — Channel #10	Sum Force; Z — Channel #10
Test Title	SPIRE; W/O 101359	SPIRE; W/O 101359
Specimen Name	Bolometer Detector Assembly (BDA)	Bolometer Detector Assembly (BDA)
Test Description	Sine Survey, Z-Axis, Cold	Sine Survey, Z-Axis, Cold
Test File Number	Run 29	Run 35
Test Date/Time	5-Aug-2003 14:4:51	5-Aug-2003 15:21:46
Channel Description	...	..
Analysis Description	Log Analysis Sweep dF= 0.01 x Frequency; Proportional Bandwidth dF= 20.00% of Freq	Log Analysis Sweep dF= 0.01 x Frequency; Proportional Bandwidth dF= 20.00% of Freq
Max at Frequency	Maximum = 1.077E+1 at 465.6 Hz.	Maximum = 1.048E+1 at 456.5 Hz.
Overall or RMS	N/A	N/A

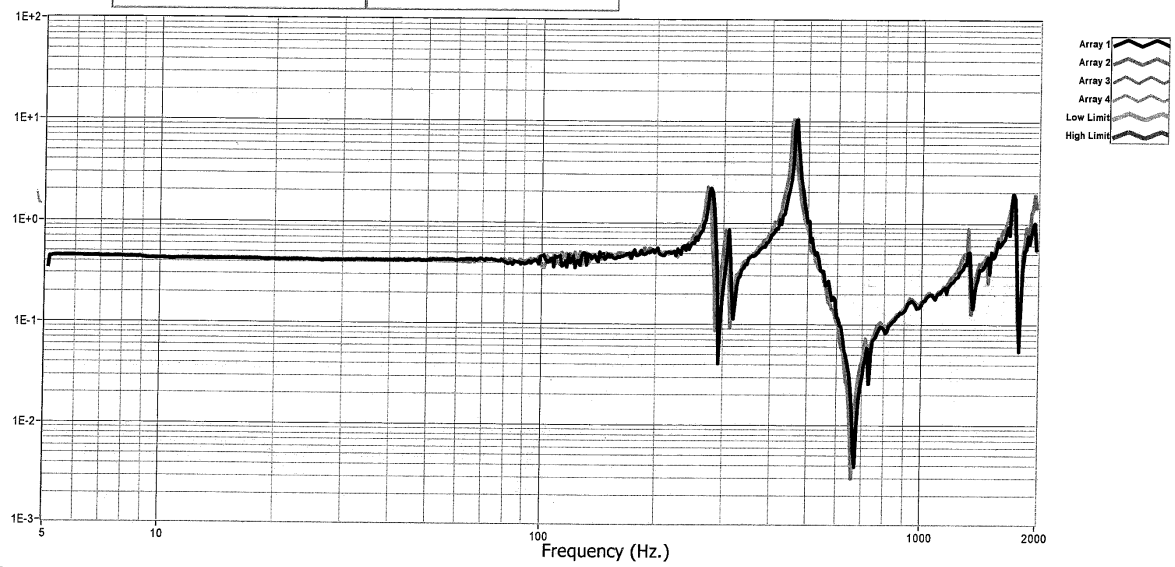

Hardware ID PFM PLW BDA, 10209800-1 S/N 014

Date	Time	AIDS	Power	Mate	Demate	Transport	Notes
							Assembly Process Connector Mates
30-Jul-2004		242005		J05	J05		kapton cable sub-assy test
30-Jul-2004		242009		J06	J06		kapton cable sub-assy test
19-Oct-2004		243851		J05,J06	J05,J06		kapton cable post-installation test
20-Oct-2004		243851		J05,J06	J05,J06		load resistor test
9-Nov-2004		243851		J05,J06	J05,J06		detector test
11-Nov-2004		243851		J05,J06	J05,J06		detector test, after feedhorn installation
							Assembly Complete
18-Nov-2004		244324		J05,J06	J05,J06		assembly complete electical test (pre-bakeout)
19-Nov-2004		244324				x	103 -> MDL -> 103, for optical metrology
19-Nov-2004		244324					Filter installation
19-Nov-2004		244324				x	103 -> bld 158 for Vacuum Bakeout (80C, 24 hrs, 10^-5 torr)
22-Nov-2004		244324				x	bld 158 -> 103
23-Nov-2004		244324		J05,J06	J05,J06		post-bakeout, pre-vibe electrical test
23-Nov-2004		244324				x	bld 103 -> 170 for metrology
23-Nov-2004		244324				x	103 -> 183 delivery to environmental test
23-Nov-2004		244398					installation into shake facility
29-Nov-2004		244398				x	183 -> 144 (shake lab)
29-Nov-2004		244398					pump / vent (for RmT pre-shake tests)
29-Nov-2004		244398					pump / cool to ~100K / **Shake Test** / warm
30-Nov-2004		244398					pump / vent (for RmT post-shake tests)
30-Nov-2004		244398				x	144 -> 183, for removal from shake fixture
30-Nov-2004		244398				x	183 -> 170 for metrology
30-Nov-2004		244398				x	170 -> 103-109D
6-Dec-2004		244399				x	103 -> 183
6-Dec-2004		244399		J05, J06			installation in thermal cycle facility
6-Dec-2004		244399					pump
7-Dec-2004		244399					thermal cycle RmT -> 4K -> RmT

Hardware ID PFM PLW BDA, 10209800-1 S/N 014

Date	Time	AIDS	Power	Mate	Demate	Transport	Notes
8-Dec-2004		244399					vent
8-Dec-2004		244399			J05, J06		remove from thermal cycle facility
8-Dec-2004		244399				x	183->170->183 for metrology
8-Dec-2004		244174		J05, J06			installation in thermal cycle facility
8-Dec-2004		244174					pump
9-Dec-2004		244174					thermal cycle RmT -> 4K
10-Dec-2004		244174					warm -> RmT
13-Dec-2004		244174					vent
13-Dec-2004		244174			J05, J06		remove from thermal cycle facility
13-Dec-2004		244174				x	183->170 -> 183 for metrology
4-Jan-2005		244588		J05, J06			Installation in BODAC
4-Jan-2005		244588					pump
5-Jan-2005		244588					cooldown
interim							performance testing
13-Jan-2005		244605					warmup
19-Jan-2005		244605					vent
19-Jan-2005		244711					pump
20-Jan-2005		244711					cooldown
interim							performance testing
28-Jan-2005		244713					warmup
4-Feb-2005		244713					vent
4-Feb-2005		244713			J05, J06		Removal from BODAC
4-Feb-2005		244713				x	183 -> 103 for storage
17-Feb-2005		244887				x	103 -> 170 -> 103 for metrology
23-Feb-2005		244892		J05, J06	J05, J06		Final electrical test.

REVISIONS

LTR	ZONE	DESCRIPTION	CODE	DWN	CHK	STRUCT	MATL	THRM CONT	PEM		ENGR	DSGN SUPV	DATA MGT	RELEASE DATE
A		INITIAL RELEASE	CODE B	SEE TITLE BLOCK									RTN	12/7/01
B		UPDATED: MASS & CG'S, FILTER SHAPE,VOLUME NEED AROUND CAPSTANS, CONN. POSITIONS. REMOVED MODES AND MASS PARTICIPATION; ROTATED PIXEL MAP 180°.	B	DJC	MAW				MIH		MAW		RGB	09/08/04
C		INCORPORATED ECR HR-SP-JPL-ECR-003; CHANGED FOCUS FOR -2 &-3; CHANGED DP TO DK	B											

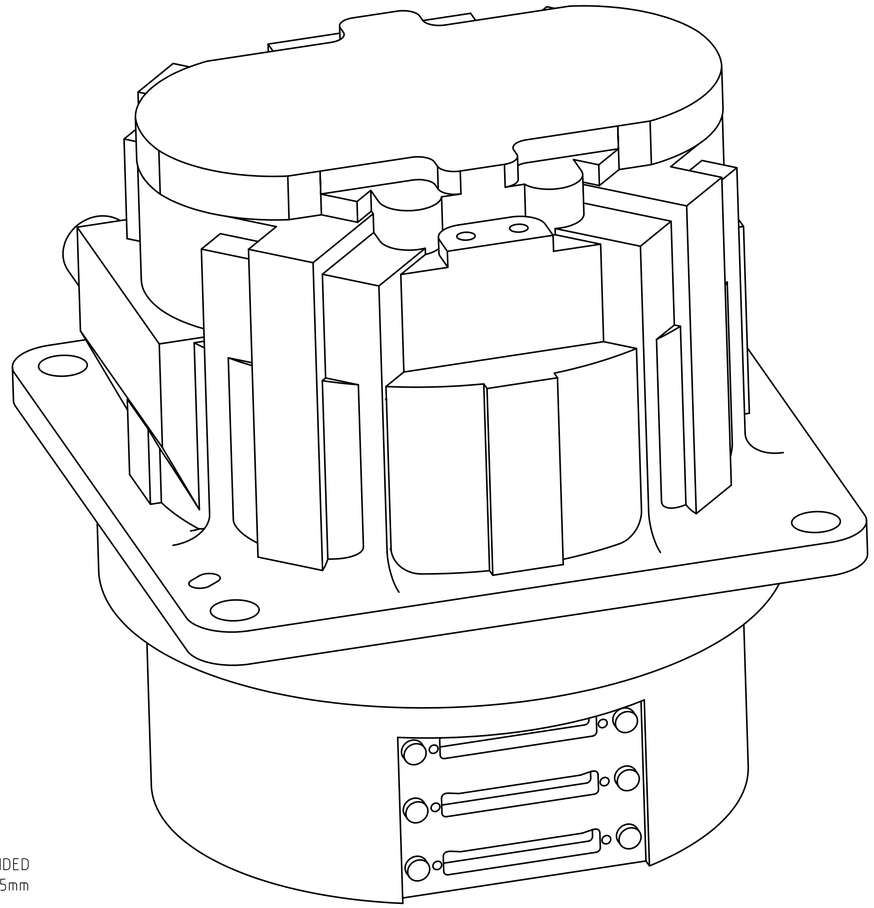

GENERAL VIEW
REFERENCE ONLY

9. ALL DIMENSIONS SHOWN FOR THE 300mK STAGE ARE FOR THE NOMINAL SUSPENDED POSITION. THE SUSPENDED UNIT MAY BE SHIFTED FROM NOMINAL POSITION ±0,5mm IN ANY AXIS.

8. ONLY PIXELS, DOWEL PIN HOLES, AND SLOTS VISIBLE. ALL OTHER FEATURES OMITTED FOR CLARITY.

7. FOR PHOTOMETER AND SPECTROMETER SUBSYSTEM INTERFACE DATA AND LAYOUT CONFIGURATION, SEE SHEETS 5-7.

6. DIMENSIONS IN {} ARE CALCULATED FOR OPERATING TEMPERATURE AND ARE PROVIDED FOR REFRENCE ONLY. ALL OTHED DIMENSIONS ARE BASED ON AN ASSEMBLY TEMPERATURE OF 20° C.

5. INDICATES CONNECTOR POSITION. CONNECTORS INSTALLED ARE NANONIC STM 051 M6SN.

4. REFER TO TABLES ON SHEETS 5, 6, AND 7 FOR DIFFERENCES BETWEEN DETECTOR ARRAYS.

3. ASSEMBLY REFERENCE DESIGNATOR, TITLE, PART NUMBER, REVISION LETTER, AND SERIAL NUMBER TO APPEAR AS SHOWN IN THIS AREA.

2. THIS IS THE INTERFACE CONTROL DRAWING FOR THE BOLOMETER DETECTOR ARRAY, JPL PART NUMBER 10209800. JPL DRAWING NUMBER 10209800 SHALL CONTAIN THE FOLLOWING NOTE: THIS ASSEMBLY MEETS THE INTERFACE REQUIREMENTS OF JPL INTERFACE CONTROL DRAWING 10209721.

1. THIS TECHNICAL DATA IS EXPORT CONTROLLED UNDER U.S. LAW AND IS BEING TRANSFERRED BY JPL TO PPARC PURSUANT TO THE NASA / PPARC LETTER OF AGREEMENT WHICH ENTERED INTO FORCE ON DECEMBER 2, 1999. THIS TECHNICAL DATA IS TRANSFERRED TO PPARC FOR USE EXCLUSIVELY ON THE NASA/PPARC SPIRE ON FIRST COOPERATIVE PROJECT, MAY NOT BE USED FOR ANY OTHER PURPOSE, AND SHALL NOT BE RE-TRANSFERRED OR DISCLOSED TO ANY OTHER PARTY WITHOUT THE PRIOR WRITTEN APPROVAL OF NASA.

NOTES: UNLESS OTHERWISE SPECIFIED

INTERFACE DRAWING

QTY REQD	ITEM NO	REF DES	CAGE NO	PART OR IDENTIFYING NO	NOMENCLATURE OR DESCRIPTION	SPECIFICATION	MATERIAL OR NOTE	ZONE

PARTS LIST

MATERIAL

METRIC

THIRD ANGLE PROJECTION

NEXT ASSEMBLY	USED ON
	SPIRE

APPLICATION

UNLESS OTHERWISE SPECIFIED
DIMENSIONS ARE IN MILLIMETERS

LINEAR TOLERANCES:

0–6	± 0.1
OVER 6–30	± 0.2
OVER 30–120	± 0.3
OVER 120–315	± 0.5
OVER 315–1000	± 0.8
OVER 1000	± 1.2

ANGULAR TOLERANCES:
± 0.5°

MACHINE FINISH (MICROMETERS) 3.2

DO NOT SCALE DRAWING
INTERPRET DWG PER ASME Y14.100M

CONTRACT NO 1244858

APPD _____ DATE _____

DWN	D CRUMB	11/9/01
CHK	B BURDICK	11/14/01
STRUCT	K BROWNING	11/19/01
MATL	M KNOPP	11/19/01
THRM CONT		
MSSL	A. J. COKER	11/7/01
PEM	G. LILENTHAL	12/13/01
ENGR	L. HUSTED	11/19/01
DSGN SUPV		

JET PROPULSION LABORATORY
CALIFORNIA INSTITUTE OF TECHNOLOGY
PASADENA, CA 91109

RELEASED THROUGH EDMG

BOLOMETER DETECTOR ARRAY, SPIRE

SIZE	CAGE NO		REV
A1	23835	10209721	C

SCALE NONE | UNCLASSIFIED | SHEET 1 OF 7

REV 2/00

AutoCAD GENERATED

10209721

Released on SEP-22-2004 by Richard G Bannister and signed by Mark A Weilert CHK, Dustin J Crumb DEGN, Martin I Herman PEM, Mark A Weilert COGE, Richard G Bannister

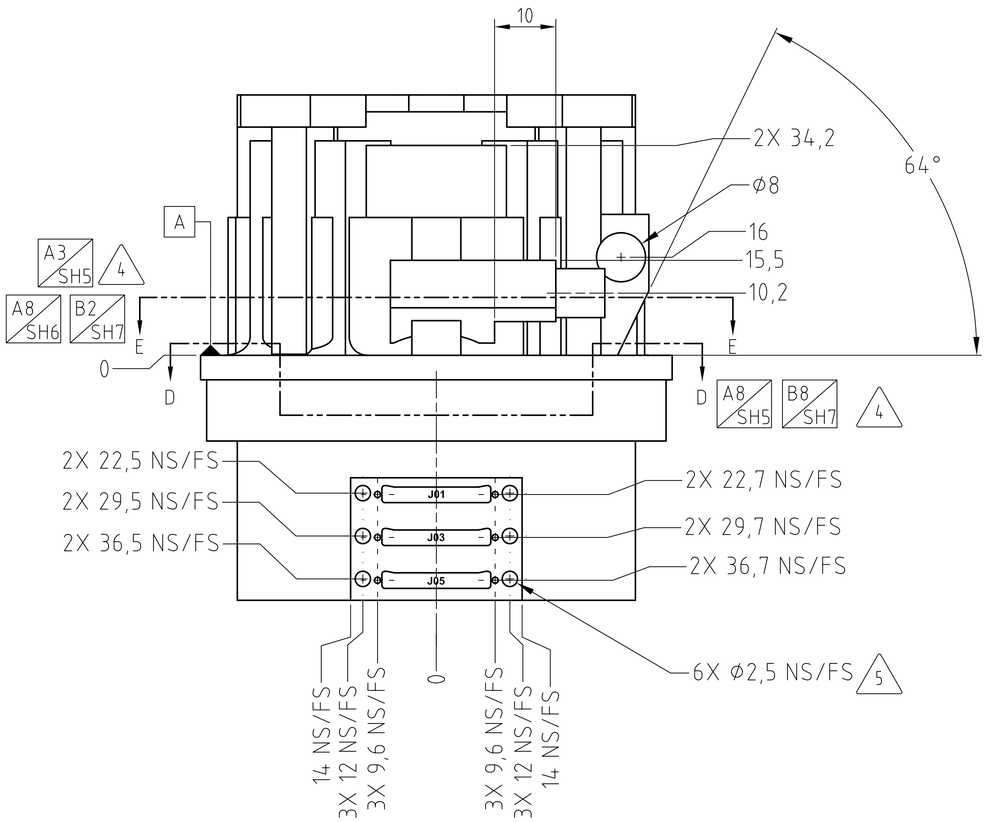

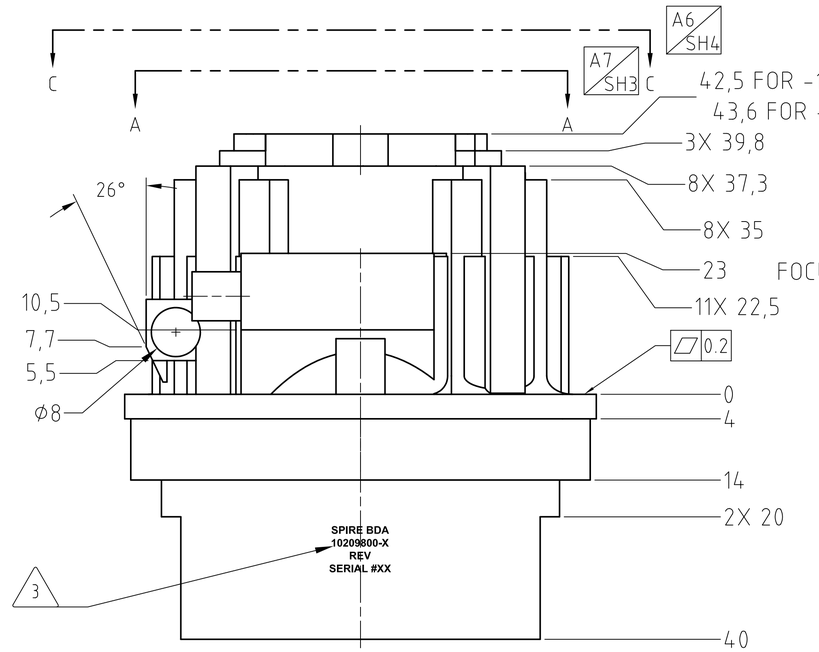

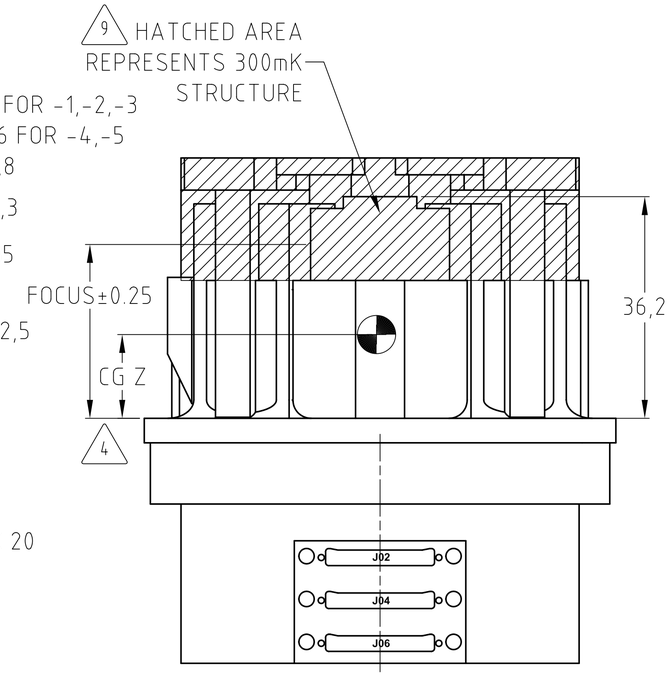

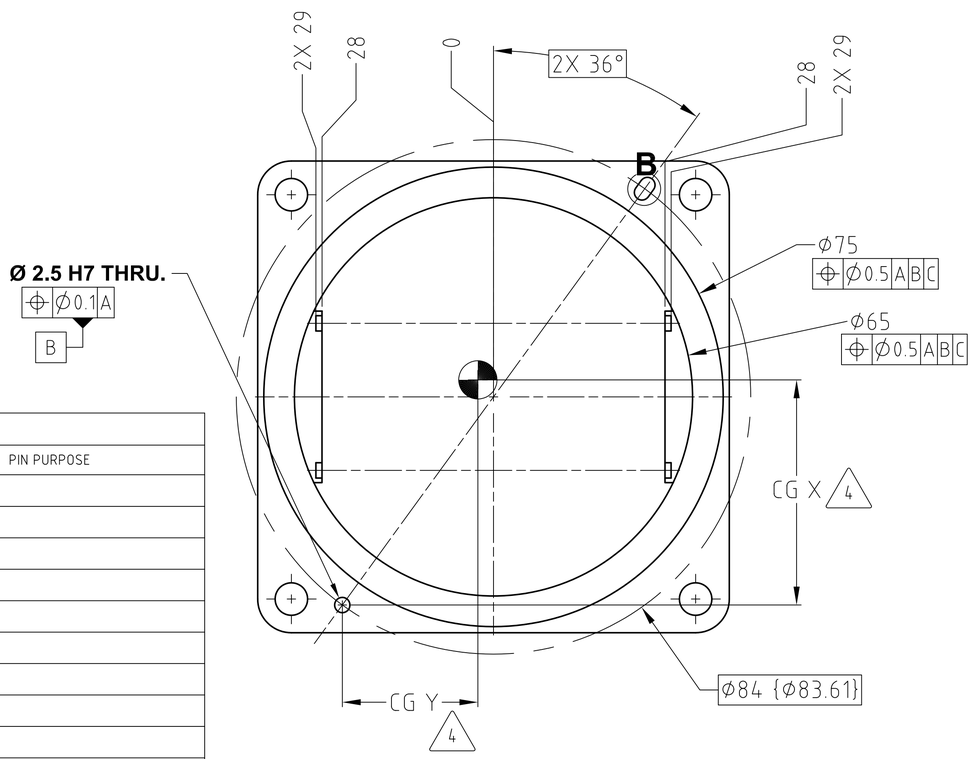

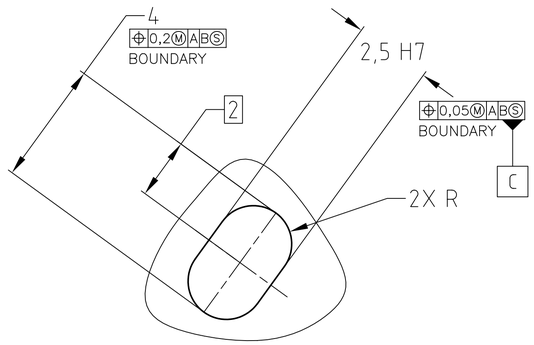

VIEW B
SCALE: 10:1

ALL CONNECTORS					
PIN #	PIN PURPOSE	PIN #	PIN PURPOSE	PIN #	PIN PURPOSE
1	SIGNAL A+	18	SIGNAL T+	35	SIGNAL J-
2	SIGNAL B+	19	SIGNAL U+	36	SIGNAL K-
3	SIGNAL C+	20	SIGNAL V+	37	SIGNAL L-
4	SIGNAL D+	21	SIGNAL W+	38	SIGNAL M-
5	SIGNAL E+	22	SIGNAL X+	39	SIGNAL N-
6	SIGNAL F+	23	SIGNAL Y+	40	SIGNAL P-
7	SIGNAL G+	24	SIGNAL Z+	41	SIGNAL R-
8	SIGNAL H+	25	SIGNAL BIAS V+	42	SIGNAL S-
9	SIGNAL I+	26	SIGNAL A-	43	SIGNAL T-
10	SIGNAL J+	27	SIGNAL B-	44	SIGNAL U-
11	SIGNAL K+	28	SIGNAL C-	45	SIGNAL V-
12	SIGNAL L+	29	SIGNAL D-	46	SIGNAL W-
13	SIGNAL M+	30	SIGNAL E-	47	SIGNAL X-
14	SIGNAL N+	31	SIGNAL F-	48	SIGNAL Y-
15	SIGNAL P+	32	SIGNAL G-	49	SIGNAL Z-
16	SIGNAL R+	33	SIGNAL H-	50	SIGNAL BIAS V-
17	SIGNAL S+	34	SIGNAL I-	51	SIGNAL BIAS GND

SIZE	CAGE NO		REV
A1	23835	10209721	C
SCALE 2:1	UNCLASSIFIED	SHEET 2 OF 7	

REV 2/00

AutoCAD GENERATED

10209721

Released on SEP-22-2004 by Richard G Bannister and signed by Mark A Weilert CHK, Dustin J Crum DEGN, Martin I Herman PEM, Mark A Weilert COGE, Richard G Bannister

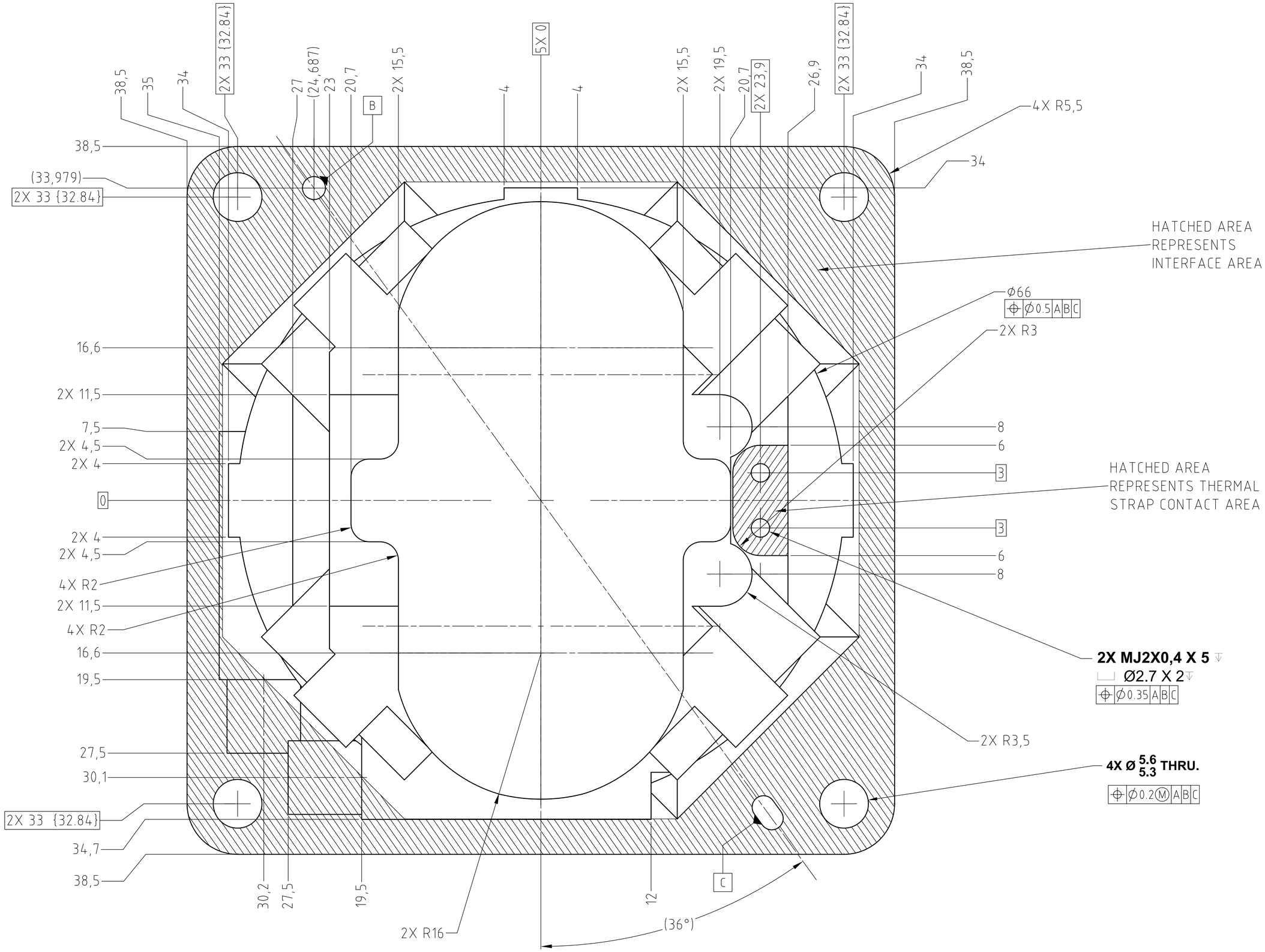

VIEW A-A

H4/SH2

SIZE	CAGE NO		REV
A1	23835	10209721	C
SCALE 2:1	UNCLASSIFIED	SHEET 3 OF 7	

REV 2/00

AutoCAD GENERATED

10209721

Released on SEP-22-2004 by Richard G Bannister and signed by Mark A Weilert CHK, Dustin J Crumb DEGN, Martin I Herman PEM, Mark A Weilert COGE, Richard G Bannister

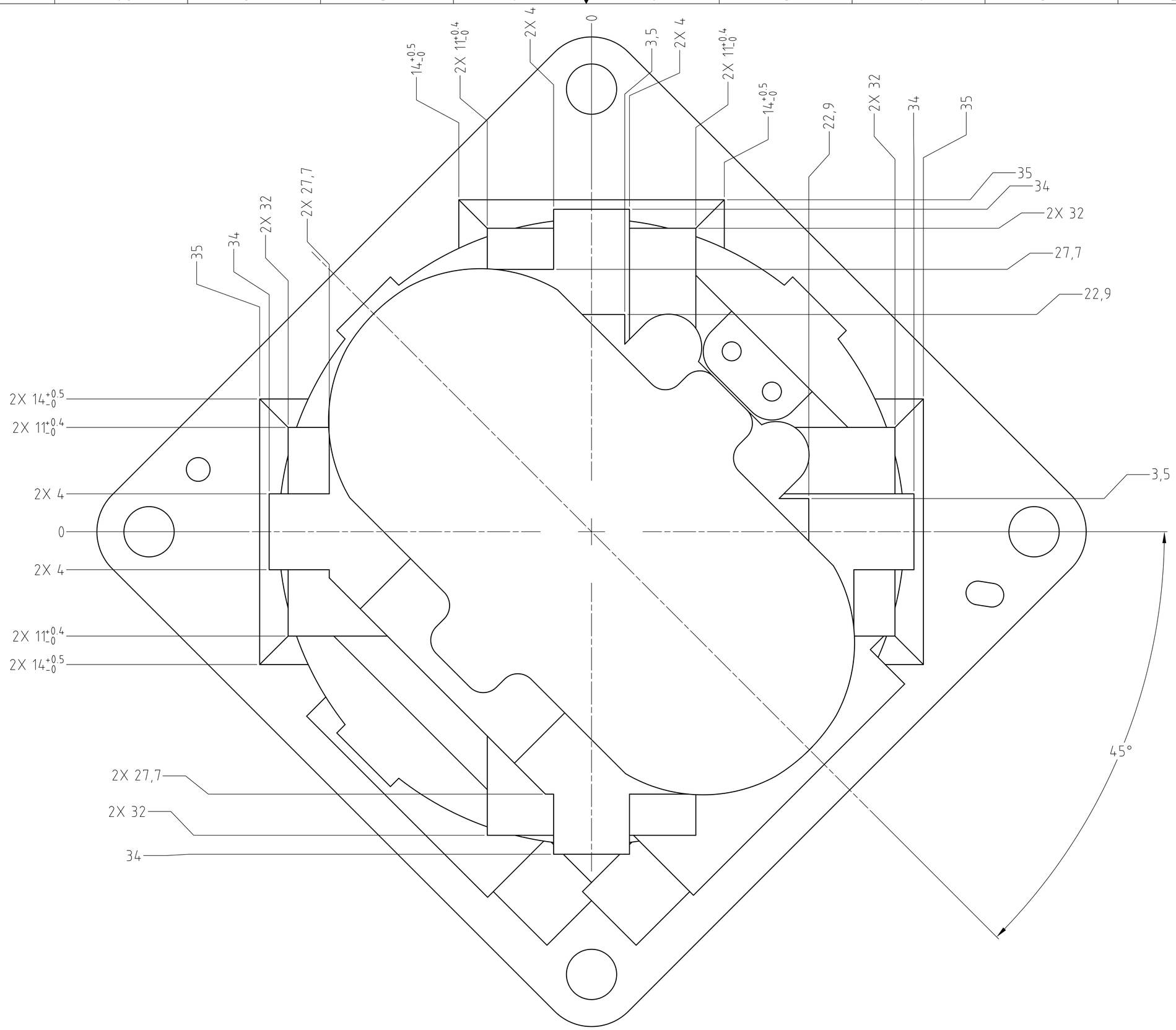

VIEW C-C ROTATED 45° CCW H4/SH2

SIZE	CAGE NO		REV
A1	23835	10209721	C
SCALE 2:1	UNCLASSIFIED	SHEET 4 OF 7	

REV 2/00

AutoCAD GENERATED

10209721

Released on SEP-22-2004 by Richard G Bannister and signed by Mark A Weilert CHK, Dustin J Crum DEGN, Martin I Herman PEM, Mark A Weilert COGE, Richard G Bannister

SUBSYSTEM INTERFACE DATA			
UNIT: P/LW			
NUMBER: 10209800-1			
FOCUS: 32.8			
CONNECTOR POSITIONS USED: J05, J06			
MECHANICAL CHARACTERISTICS			
MASS: 632 g			
C.O.G. LOCATION W.R.T. LOCATION HOLE:	X 34.4	Y 24.3	Z 6
MOMENT OF INERTIA:	I_X 772 Kg*mm^2	I_Y 1,145 Kg*mm^2	I_Z 1,423 Kg*mm^2
MECHANICAL INTERFACE MATERIAL: 7075 AL			
SURFACE FINISH DESCRIPTION: CHEM FILM GOLD			
TOTAL CONTACT AREA: 1783 mm^2			
R.M.S. ROUGHNESS OF CONTACT AREA: 3.2 uM			
THERMAL STRAP INTERFACE MATERIAL: CU 99.999% PURE			
THERMAL STRAP SURFACE FINISH DESCRIPTION: GOLD PLATED			
THERMAL STRAP CONTACT AREA: 57.5 mm^2			
THERMAL STRAP R.M.S. ROUGHNESS OF CONTACT AREA: 3.2 uM			

SUBSYSTEM INTERFACE DATA			
UNIT: P/MW			
NUMBER: 10209800-2			
FOCUS: 32.2			
CONNECTOR POSITIONS USED: J01, J02, J03, J04			
MECHANICAL CHARACTERISTICS			
MASS: 632 g			
C.O.G. LOCATION W.R.T. LOCATION HOLE:	X 34.4	Y 24.3	Z 8.5
MOMENT OF INERTIA:	I_X 764 Kg*mm^2	I_Y 1,152 Kg*mm^2	I_Z 1,428 Kg*mm^2
MECHANICAL INTERFACE MATERIAL: 7075 AL			
SURFACE FINISH DESCRIPTION: CHEM FILM GOLD			
TOTAL CONTACT AREA: 1783 mm^2			
R.M.S. ROUGHNESS OF CONTACT AREA: 3.2 uM			
THERMAL STRAP INTERFACE MATERIAL: CU 99.999% PURE			
THERMAL STRAP SURFACE FINISH DESCRIPTION: GOLD PLATED			
THERMAL STRAP CONTACT AREA: 57.5 mm^2			
THERMAL STRAP R.M.S. ROUGHNESS OF CONTACT AREA: 3.2 uM			

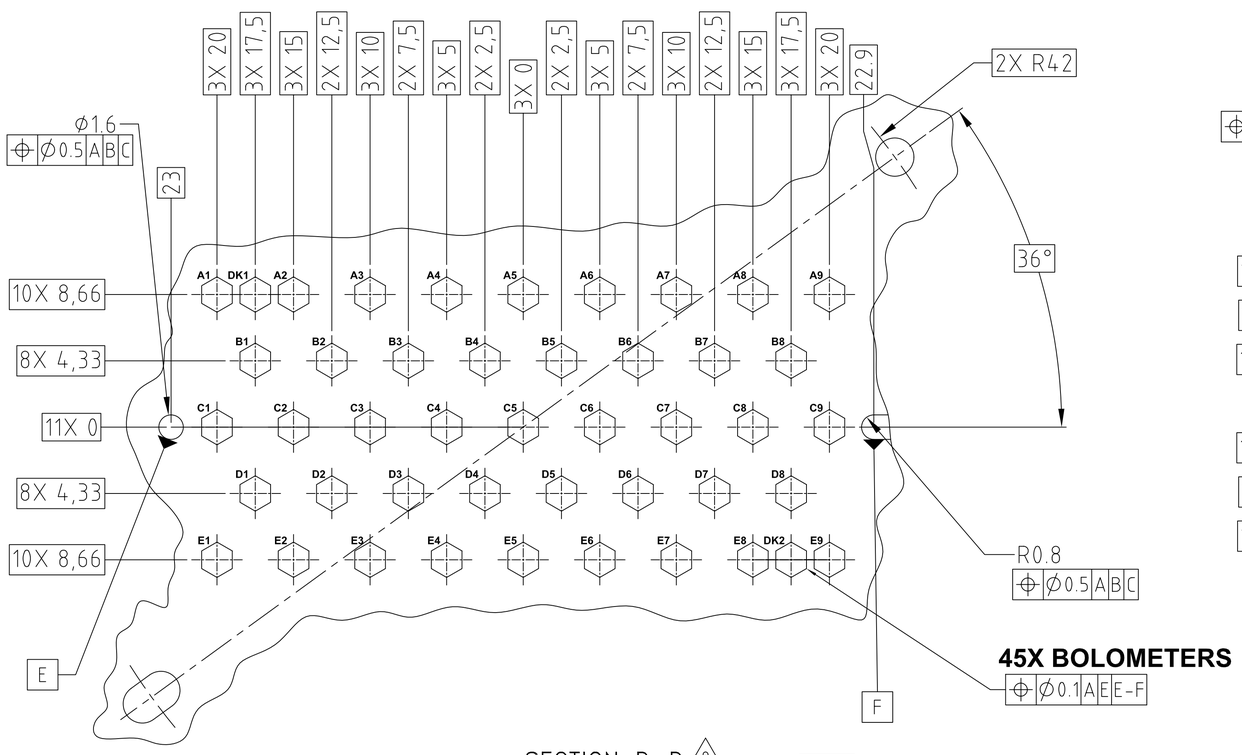

SECTION D-D 8
PHOTOMETER LONG WAVE
SCALE: 5:1

F9 / SH2

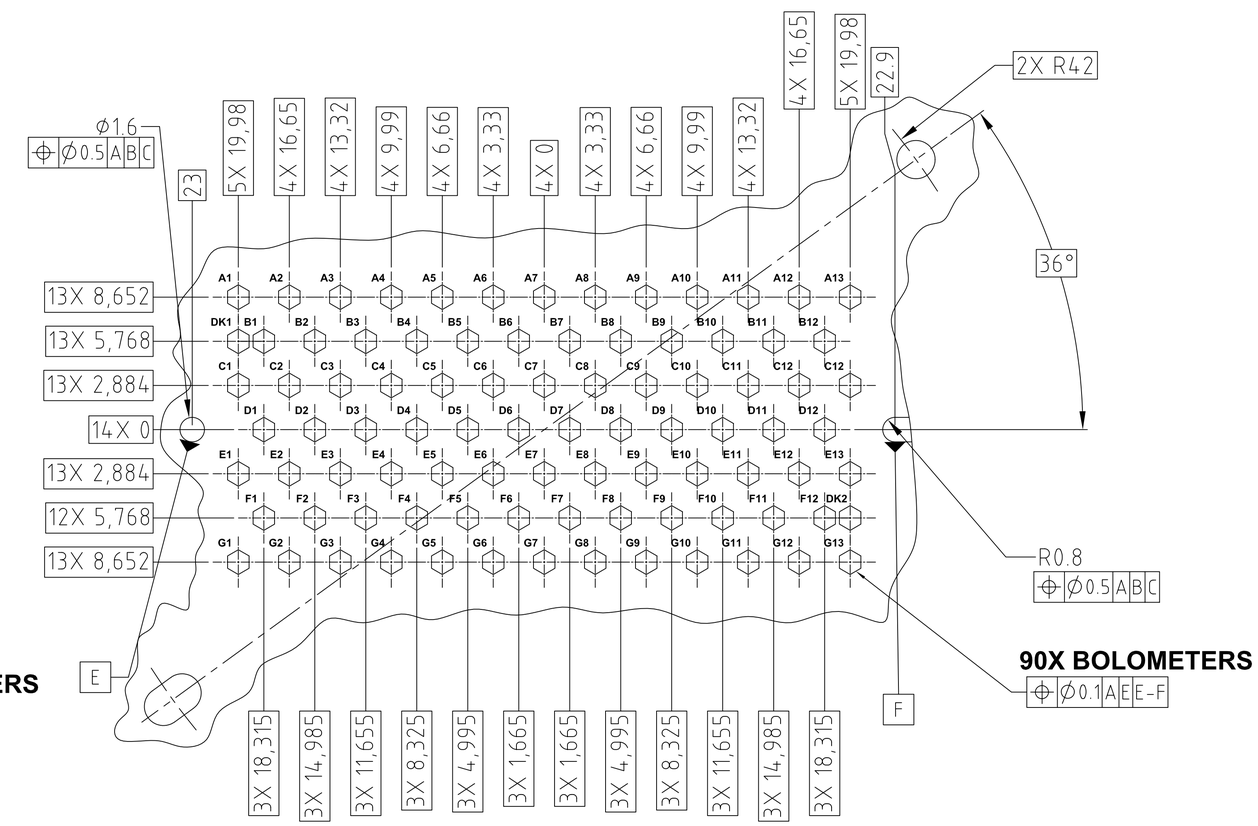

SECTION E-E 8
PHOTOMETER MEDIUM WAVE
SCALE: 5:1

G12 / SH2

SIZE	CAGE NO		REV
A1	23835	10209721	C
SCALE NOTED	UNCLASSIFIED	SHEET 5 OF 7	

REV 2/00

AutoCAD GENERATED

A1 10209721

Released on SEP-22-2004 by Richard G Bannister and signed by Mark A Weilert CHK, Dustin J Crum DEGN, Martin I Herman PEM, Mark A Weilert COGE, Richard G Bannister

SUBSYSTEM INTERFACE DATA					
UNIT: P/SW					
NUMBER: 10209800-3					
FOCUS: 23.8					
CONNECTOR POSITIONS USED: J01, J02, J03, J04, J05, J06					
MECHANICAL CHARACTERISTICS					
MASS: 600 g					
C.O.G. LOCATION W.R.T. LOCATION HOLE:	X	34.5	Y	24.3	Z 6.5
MOMENT OF INERTIA:	I_x	712 Kg*mm^2	I_Y	1,074 Kg*mm^2	I_Z 1,364 Kg*mm^2
MECHANICAL INTERFACE MATERIAL: 7075 AL					
SURFACE FINISH DESCRIPTION: CHEM FILM GOLD					
TOTAL CONTACT AREA: 1783 mm^2					
R.M.S. ROUGHNESS OF CONTACT AREA: 3.2 uM					
THERMAL STRAP INTERFACE MATERIAL: CU 99.999% PURE					
THERMAL STRAP SURFACE FINISH DESCRIPTION: GOLD PLATED					
THERMAL STRAP CONTACT AREA: 57.5 mm^2					
THERMAL STRAP R.M.S. ROUGHNESS OF CONTACT AREA: 3.2 uM					

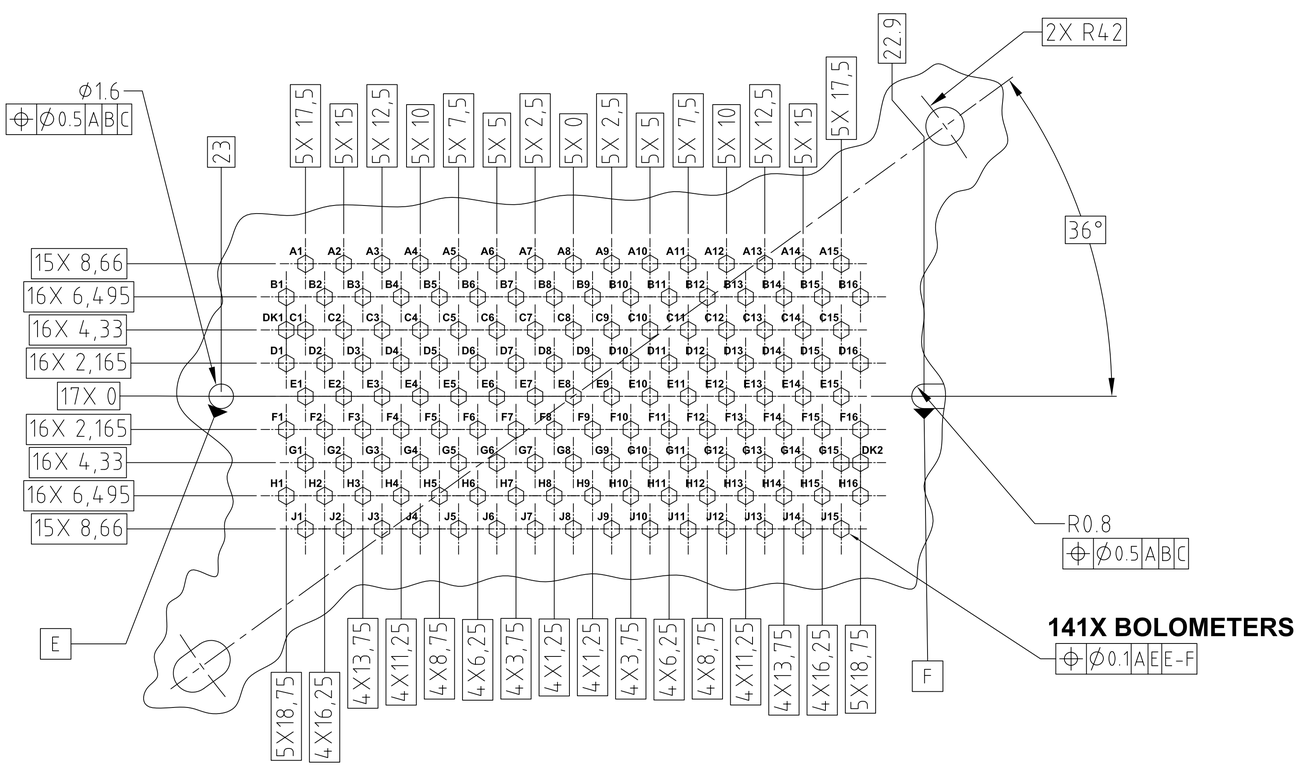

SECTION E-E (8)
PHOTOMETER SHORT WAVE
SCALE: 5:1

G12 / SH2

SIZE	CAGE NO		REV
A1	23835	10209721	C
SCALE NOTED		UNCLASSIFIED	SHEETS OF7

REV 2/00

AutoCAD GENERATED

10209721

Released on SEP-22-2004 by Richard G Bannister and signed by Mark A Weilert CHK, Dustin J Crum DEGN, Martin I Herman PEM, Mark A Weilert COGE, Richard G Bannister

SUBSYSTEM INTERFACE DATA			
UNIT: S/LW			
NUMBER: 10209800-4			
FOCUS: 36.9			
CONNECTOR POSITIONS USED: J05			
MECHANICAL CHARACTERISTICS			
MASS: 550 g			
C.O.G. LOCATION W.R.T. LOCATION HOLE:	X 34.5	Y 24.1	Z 4.4
MOMENT OF INERTIA:	I_X 665 Kg*mm^2	I_Y 990 Kg*mm^2	I_Z 1,239 Kg*mm^2
MECHANICAL INTERFACE MATERIAL: 7075 AL			
SURFACE FINISH DESCRIPTION: CHEM FILM GOLD			
TOTAL CONTACT AREA: 1783 mm^2			
R.M.S. ROUGHNESS OF CONTACT AREA: 3.2 uM			
THERMAL STRAP INTERFACE MATERIAL: CU 99.999% PURE			
THERMAL STRAP SURFACE FINISH DESCRIPTION: GOLD PLATED			
THERMAL STRAP CONTACT AREA: 57.5 mm^2			
THERMAL STRAP R.M.S. ROUGHNESS OF CONTACT AREA: 3.2 uM			

SUBSYSTEM INTERFACE DATA			
UNIT: S.SW			
NUMBER: 10209800-5			
FOCUS: 26.7			
CONNECTOR POSITIONS USED: J05, J06			
MECHANICAL CHARACTERISTICS			
MASS: 510 g			
C.O.G. LOCATION W.R.T. LOCATION HOLE:	X 34.6	Y 24.2	Z 6
MOMENT OF INERTIA:	I_X 628 Kg*mm^2	I_Y 936 Kg*mm^2	I_Z 1,189 Kg*mm^2
MECHANICAL INTERFACE MATERIAL: 7075 AL			
SURFACE FINISH DESCRIPTION: CHEM FILM GOLD			
TOTAL CONTACT AREA: 1783 mm^2			
R.M.S. ROUGHNESS OF CONTACT AREA: 3.2 uM			
THERMAL STRAP INTERFACE MATERIAL: CU 99.999% PURE			
THERMAL STRAP SURFACE FINISH DESCRIPTION: GOLD PLATED			
THERMAL STRAP CONTACT AREA: 57.5 mm^2			
THERMAL STRAP R.M.S. ROUGHNESS OF CONTACT AREA: 3.2 uM			

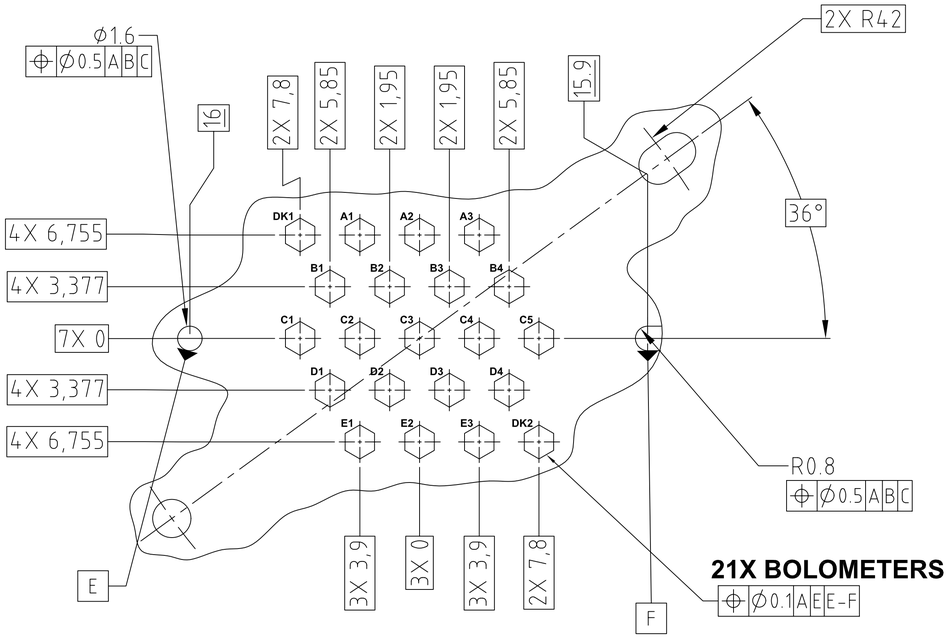

SECTION D-D 8
SPECTROMETER LONG WAVE
SCALE: 5:1

F9/SH2

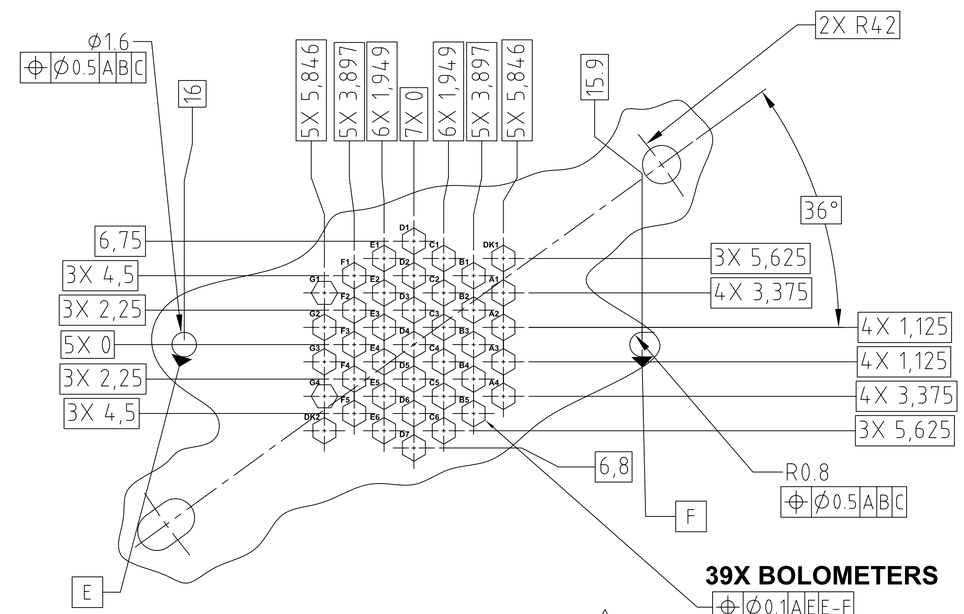

SECTION E-E 8
SPECTROMETER SHORT WAVE
SCALE: 5:1

G12/SH2

SIZE	CAGE NO		REV
A1	23835	10209721	C
SCALE 5:1	UNCLASSIFIED	SHEET 7 OF 7	

REV 2/00

AutoCAD GENERATED

A1 10209721

Released on SEP-22-2004 by Richard G Bannister and signed by Mark A Weilert CHK, Dustin J Crumb DEGN, Martin I Herman PEM, Mark A Weilert COGE, Richard G Bannister

REVISIONS												
LTR	ZONE	DESCRIPTION	DWN	CHK	STRUCT	MATL	TANK CHK		ENGR	ENGR CHK	QLTY ACCP	RELEASE DATE
A		INITIAL RELEASE	SEE TITLE BLOCK								RGB	3/18/03
B		INCORPORATED ECR 283825	2	DJC						REW	RGB	07/02/04
C		INCORPORATED RAL ECR HR-DP-JPL-ECR-005	3									

ARRAY DEFINITION		10209800-1 P/LW		10209800-2 P/MW				10209800-3 P/SW						10209800-4 S/LW	10209800-5 S/SW	
BDA CONNECTOR		J05	J06	J01	J02	J03	J04	J01	J02	J03	J04	J05	J06	J05	J05	J06
PIXEL MAP	A	R1	E1	A7	E7	A13	R1	D6	F12	R1	E1	D11	G5	R1	R1	—
	B	A8	E2	A6	D7	T1	G1	B6	J11	D16	F1	A10	H6	T1	A4	—
	C	A7	E3	B6	F7	B12	T2	C5	E12	T1	T2	E10	J6	C1	A3	—
	D	A6	E4	C7	E8	C13	E1	A5	H12	B16	H1	C10	F6	DK1	A2	—
	E	A9	D1	A5	G8	A12	D1	E5	G12	C15	G1	B10	G6	B1	A1	—
	F	C9	D2	B5	F8	D12	F1	B5	F13	A15	J1	D10	H7	D1	DK1	—
	G	B8	D3	C6	E9	C12	E2	D5	E13	D15	H2	A9	F7	E1	B3	G3
	H	B7	D4	D6	G9	B11	G2	C4	J12	B15	F2	E9	J7	A1	B2	G4
	I	C7	C1	B4	D9	A11	F2	A4	H13	C14	J2	C9	G7	C2	B1	DK2
	J	B5	C3	C5	F9	E13	G3	D4	G13	D14	G2	B9	H8	D2	C3	F5
	K	B6	C5	D4	E10	D11	E3	B4	F14	A14	H3	D9	F8	B2	C2	F4
	L	A5	T2	A4	G10	C11	D3	C3	E14	A13	J3	A8	G8	E2	C1	E6
	M	T1	E5	C4	F10	B10	F3	B3	J13	B14	E2	C8	J8	A2	D3	E5
	N	B4	C6	B3	E11	A10	G4	A3	H14	C13	F3	E8	F9	C3	D2	E4
	P	C4	C8	C3	G11	D10	E4	A2	G14	B13	G3	D8	H9	D3	D1	D7
	R	B3	D5	B2	F11	B9	F4	D3	J14	D13	H4	B8	G9	B3	E3	D6
	S	C2	D6	D2	E12	C10	E5	C2	F15	A12	J4	C7	J9	E3	E2	D5
	T	B2	D7	A3	G12	C9	D5	B2	H15	C12	E3	E7	F10	C4	E1	D4
	U	B1	D8	A2	F12	A9	F5	D2	J15	D12	F4	A7	H10	DK2	F3	C6
	V	A3	E7	C2	G13	B8	G5	A1	G15	B12	G4	D7	G10	D4	F2	C5
	W	A4	E6	B1	DK2	A8	E6	C1	H16	E11	H5	B7	F11	C5	F1	C4
	X	A1	E8	A1	T/C	D8	G6	B1	DK2	A11	E4	C6	J10	B4	G1	B5
	Y	DK1	DK2	DK1	T/C	C8	F6	DK1	F16	C11	J5	E6	H11	A3	T1	B4
	Z	A2	E9	C1	T/C	B7	G7	D1	E15	B11	F5	A6	G11	T2	G2	T2
JFET INTERFACE	AA	HSJFP07 J14	HSJFP08 J16	HSJFP11 J22	HSJFP12 J24	HSJFP09 J18	HSJFP10 J20	HSJFP03 J06	HSJFP04 J08	HSJFP01 J02	HSJFP02 J04	HSJFP05 J10	HSJFP06 J12	HSJFS03 J06	HSJFS01 J02	HSJFS02 J04
	BB	HSJFP07 J13	HSJFP08 J15	HSJFP11 J21	HSJFP12 J23	HSJFP09 J17	HSJFP10 J19	HSJFP03 J05	HSJFP04 J07	HSJFP01 J01	HSJFP02 J03	HSJFP05 J09	HSJFP06 J11	HSJFS03 J05	HSJFS01 J01	HSJFS02 J03
	CC	HSJFP07 J35	HSJFP08 J36	HSJFP11 J39	HSJFP12 J40	HSJFP09 J37	HSJFP10 J38	HSJFP03 J31	HSJFP04 J32	HSJFP01 J29	HSJFP02 J30	HSJFP05 J33	HSJFP06 J34	HSJFS03 J13	HSJFS01 J11	HSJFS02 J12
	DD	HSJFP07 J47	HSJFP08 J48	HSJFP11 J51	HSJFP12 J52	HSJFP09 J49	HSJFP10 J50	HSJFP03 J43	HSJFP04 J44	HSJFP01 J41	HSJFP02 J42	HSJFP05 J45	HSJFP06 J46	HSJFS03 J17	HSJFS01 J15	HSJFS02 J16
FPU HARNESS		7	8	11	12	9	10	3	4	1	2	5	6	15	13	14
CRYO HARNESS		6	6	4	4	5	5	8	8	9	9	7	7	1	2	2

7. INFORMATION IN THIS DOCUMENT IS ALSO CONTAINED IN THE HARNESS DEFINITION DOCUMENT, RAL DOCUMENT SPIRE-RAL-PRJ-000608. IN AREAS WHERE THERE ARE CONFLICTS, THE HARNESS DEFINITION DOCUMENT TAKES PRECEDENCE.

6. ESD PROTECTION RESISTORS ARE 7 TIMES THE SOURCE RESISTOR.

5. GROUND WIRE TO BE TERMINATED AT INSTRUMENT INTEGRATION. WIRE WILL HAVE A MINIMUM LENGTH OF 150MM.

4. UNLESS OTHERWISE NOTED, ⏚ IS JFET CHASSIS GROUND.

3. JFET MEMBRANE HEATER IS 0.0204 TIMES THE SOURCE RESISTOR.

2. ALL RESISTORS HAVE A TOLERANCE OF ±40%.

1. THIS TECHNICAL DATA IS EXPORT CONTROLLED UNDER U.S. LAW AND IS BEING TRANSFERRED BY JPL TO PPARC PURSUANT TO THE NASA / PPARC LETTER OF AGREEMENT WHICH ENTERED INTO FORCE ON DECEMBER 2, 1999. THIS TECHNICAL DATA IS TRANSFERRED TO PPARC FOR USE EXCLUSIVELY ON THE NASA/PPARC SPIRE ON FIRST COOPERATIVE PROJECT, MAY NOT BE USED FOR ANY OTHER PURPOSE, AND SHALL NOT BE RE-TRANSFERRED OR DISCLOSED TO ANY OTHER PARTY WITHOUT THE PRIOR WRITTEN APPROVAL OF NASA.

NOTES: UNLESS OTHERWISE SPECIFIED

QTY REQD	ITEM NO	REF DES	CAGE NO	PART OR IDENTIFYING NO	NOMENCLATURE OR DESCRIPTION	SPECIFICATION	MATERIAL OR NOTE	ZONE

PARTS LIST

MATERIAL

METRIC

THIRD ANGLE PROJECTION

NEXT ASSEMBLY: SPIRE
USED ON:
APPLICATION

UNLESS OTHERWISE SPECIFIED DIMENSIONS ARE IN MILLIMETERS
LINEAR TOLERANCES:
DIM ± 0.1
OVER 50-120 ± 0.3
OVER 120-315 ± 0.5
OVER 315-1000 ± 0.8
OVER 1000 ± 1.0
ANGULAR TOLERANCES:
± 0°30'
MACHINE FINISH 32
MACHINE FINISH
DO NOT SCALE DRAWING
INTERPRET DWG PER ANSI Y14.100M

CONTRACT NO: GENERAL

APPD	DATE
DWN D CRUMB	2/28/03
CHK J BOCK	3/17/03
STRUCT	
MATL S GRIFFIN	2/11/03
TANK CHK B SVENVARD	2/11/03
RAL J DELBERSFELD	2/10/03
PEM G LILSENTHAL	3/17/03
ENGR L HUSTED	2/28/03

JET PROPULSION LABORATORY
CALIFORNIA INSTITUTE OF TECHNOLOGY
PASADENA, CA 91109
RELEASED THROUGH EDMS

WIRING SCHEMATIC, SPIRE

SIZE A1X3 | CAGE NO 23835 | 10209725 | REV C

SCALE NONE | UNCLASSIFIED | SHEET 1 OF 1

REV 2/00

FRAME	CAGE NO	DRAWING NUMBER	REV	SH NO
1 or 2	23835	10209725	C	1

10209725 | A1X3 | C | 1 | 34

10509252 | SIGNAL CONDITIONED

Released on JUL-15-2004 by Richard G Bannister and signed by James J Bock CHK, Dustin J Crumb DEGN, Martin I Herman PEM, Mark A Weilert COGE, Richard G Bannister

Backshort Data

---TO BE PROVIDED ---