JPL Hardware Requirements Certification Review (HRCR)- Proto-Flight Model (PFM) Photometer Short Wavelength (PSW) Bolometer Detector Assembly (BDA)

10209800-3 S/N 013

SPIRE Element
Herschel Space Observatory Project

February 17, 2005

PRELIMINARY

CONTENTS

	SECTION
Hardware Requirements Certification Review (HRCR) Form	**1**
Final Inspection Report (IR)	**2**
Issues	**3**
M. Herman 15 May 2003 memo (fasteners for vibe. tests)	
Top Level Assembly Drawings	**4**
ECRs / NCRs	**5**
HR-SP-JPL-ECR-003 (Spectrometer BDA envelope height)	
HR-SP-JPL-ECR-005 (Kapton Cable routing design error)	
HR-SP-JPL-NCR-006 (PMW and PSW focal position shift)	
Waivers	**6**
HR-SP-JPL-RFW-005 (Sine Vibe Omission)	
HR-SP-JPL-RFW-006 (Vibration Test Levels)	
Open Problem / Failure Reports (PFR)	**7**
This Hardware: (None)	
Similar Hardware: (None)	
Handling Documents	**8**
General / Unpacking	
Electronic	
Environmental Requirements Verification Matrix	**9**
Performance Data Matrix	**10**
Qualification Status	**11**
Connector Mate and Operation Logs	**12**
Mechanical & Electrical ICDs	**13**
Other Data	**14**
Detector Backshort Data	
Alignment Measurement Summary	
Feedhorn Data	
300mK Spectrometer Filter EIDP	

RAL EIDP Table Of Contents Vs. HRCR Contents

EIDP Section	EIDP	HRCR Box #	Comments/Notebook Section
1	Shipping Documents		Shipper and Final IR
2	Transportation, Packing, Handling & Integration Procedures	20	Section 8
3	Certificate of Conformance / Delivery Review Board MoM		HRCR form is the CofC
4	As Built Configuration Status List	1	
5	List of Waivers	16	Section 6
6	Copies of Waivers	16	Section 6
7	List of Non-Conformance Reports	17, 18	Section 5
8	Copies of Non-Conformance Reports	17, 18	
9	Cleanliness Statement	10	Final IR includes inspection for conformance with cleanliness requirement (particulates)
10	Operational Manual	20	
11	Top Level Drawings (inc. Family Tree)	14	Section 4
12	Interface Drawings	26	Section 13
13	Functional, Block & Mechanical Drawings	14	Section 4
14	Electrical Circuit Drawings		See Electrical Handling Doc.
15	Serialized Components List		In the build books – not shipped
16	Mass Properties/ Power Budget		Mass found in header of HRCR
17	Qualification Status List / Test Matrix	22	Qual. Report to be supplied later, Summary in Section 11
18	Test Reports		To be supplied later, Summaries in Sections 9 and 10
19	Open Work / Deferred Work / Open Tests	5	
20	Calibration Data		Section 10
21	Historical Record		Section 12
22	Manufacturing Logbook(s)	--	To be retained at JPL
23	Operating Time / Cycle Record	24	Section 12
24	Connector Mating Record	24	Section 12
25	Age Sensitive Items Record		NA for BDA
26	Pressure Vessels – History/Test Record		NA
27	Temporary Installation Record		Section 12
28	Reference List of EIDPs (Lower level)		300mK Filter EIDP - Section 14
29	Other Useful Information		Section 14

JPL Hardware Requirements Certification Review – SPIRE Element #D-31446

Assembly/Subsystem	PEM	Phone	Section	Date
SPIRE	Martin Herman	(818) 354-8541	386	23 February, 2005

Drawing/ Part No.	Dwg. Rev.	Nomenclature	Serial No.	Model	Type	Final IR No.	Mass (grams) As Meas. / Req.
10209800-3	B	Bolometer Detector Assembly	013	PFM	PSW	923808	579 g / 600 g

Check applicable answer and give necessary explanation in remarks column	Yes	No	N/A	Remarks	Data Attachments (Package Sec. #)	Signature Approval & Date
1. Are all drawings and specifications complete, approved, released and frozen?	X				14. Latest Top Assembly Drawings ☒ Attached ☐ None (Sec. 4)	Cog E
2. Do the released drawings and specifications reflect all approved changes?	X				15. List of open ECRs ☒ Attached ☐ None (Sec. 5)	PEM
3. Is hardware identical to other hardware delivered? If no, provide difference list.			X	First hardware of this type delivered	16. Waivers ☒ Attached ☐ None (Sec. 6)	QA Engineer
4 Does the hardware meet the requirement of its functional requirements, specifications, waivers and/or ICDs ? If no, provide difference list.	X			See Issues (section 3). See section 11 for detector performance matrix.	17. Open MRBs ☐ Attached ☒ None (N/A)	Environments/Reliability
5. Have all IR discrepancies and MRBs been dispositioned and agreed to by Engineering/ QA ?	X				18. Open P/FRs on this H/W ☐ Attached ☒ None (Sec. 7)	Mission Assurance Mgr.
6. Is complete as-built list information included in the build book?	X				19. Open P/FRs on similar H/W ☐ Attached ☒ None (Sec. 7)	Project
7. Have all required environmental tests & analyses been completed?	X				20. Handling Documents ☒ Attached ☐ None (Sec. 8)	PI
8. Is all required assembly and/or subsystem level functional testing complete?	X				21. Shortage List ☐ Attached ☒ None (N/A)	
9. Have all piece parts, processes and materials been approved by JPL?	X				22. Requirements Verification Matrix ☒ Attached ☐ None (Sec. 9)	
10. Does this hardware meet all contamination control requirements?	X				23. Qualification Status ☒ Attached ☐ None (Sec. 11)	
11. Are all required shipping containers, shipping procedures, and special handling procedures ready?	X				24. Connector Mate / Demate Log ☒ Attached ☐ None (Sec. 12)	
12. Is additional work required to bring this hardware to flight readiness?		X			25. Operation Log ☒ Attached ☐ None (Sec. 12)	
13. Is this hardware acceptable for flight ?	X				26. ICDs ☒ Attached ☐ None (Sec. 13)	

*** INSPECTION REPORT ***
Printed Copies are for Reference Only - Please check with PDMS for official version

IR Number
923808

Action
BROWSE

Status "IR & IRDI Initiated"

IR Instructions

REFERS TO:

Part Number	Dash Number	Revision	Latest Rev	Serial Number	Quantity
10209800-3	(with part number)	A	B	013	1

Nomenclature:	**BOLOMETER DETECTOR ARRAY**		
Prgm/Project:	HSO-PLANCK	Inspection Date:	20-SEP-2004
COGE:	WEILERT, MARK A.	ECO/ECI:	
QAE:	HUGHES, SCOTT P.	Reference Designator:	SPIRE
JPL/Mfr:	JPL	Lot No.:	
Type of Inspection:	Final-Ship	Insp. Std / Spec No.:	
Type of Item:	Flight	AIDS No.:	
Location:	JPL	Work Order No.:	
Manufacturer:	JPL	CAGE Code:	
Supplier:	JPL	Receipt No.:	
Parts received by:		Property / ID:	
Received date:		PO/CT No.:	
Qty Accepted:		Line No.:	
Qty Rejected:	0	Rel / Mod No.:	
QA Alert?		CAN Required?	
IMTE Code:	None	IMTE Number:	
IMTE Code No. 2:	None	IMTE Number No. 2:	
IMTE Code No. 3:	None	IMTE Number No. 3:	
IMTE Code No. 4:	None	IMTE Number No. 4:	
Orig Nomenclature:			

DISCREPANT ITEMS:

Item	Discrep Code	Qty	Zone	S/N	Description	Re-Work	Files

This IR has No Discrepant Items

Item	Disposition	Root Cause Code	Dispo Code	Disp. Appr.	Stamp Date

This IR has No Discrepant Items

Inspection Report Notes:

	Initiated by	Signed by COGE	Signed by QAE	Closed by
Number of Files Attached 0	Date	Date	Date	Date

Reserved by	Reserved on	Reason

Issues
PFM PSW BDA 10209800-3 S/N 013

Configuration / Processing:

Several ECRs related to this hardware have been incorporated into released drawings. They are included for reference:

- The maximum height of 300 mK stage exceeds ICD drawing 10209721 allowed range by 1.0 mm due to changes in 300 mK filter stack thickness which were not incorporated into the drawing. See attached ECR: HR-SP-JPL-ECR-003 in section 6. This change has been incorporated into Rev-C of the ICD.

- A focus position shift caused by an internal mechanical interference fix was incorporated into ICD drawing 10209721 Rev C per HR-SP-JPL-NCR-006 (attached in in section 6).

- A pixel map modification was incorporated into electrical schematic 10209725 Rev C per HR-SP-JPL-ECR-005 (attached in section 6). This drawing revision also incorporated JPL ECR 1026751.

Environmental Test:

- Shake tests were performed with non-flight-like 8-32 mounting screws, instead of 6-32. See attached email regarding this issue: (M. Herman, 15 May 2003) -- *This same issue applied to the previous CQM-PLW and PFM-SLW BDAs.*

- Shake tests were performed in accordance with open waivers HR-SP-JPL-RFW-005 (Sine Vibration Omission) and HR-SP-JPL-RFW-006 (Vibration Test Levels). See Waiver List (section 7).

Date: Mon, 11 Aug 2003 16:34:04 -0700
From: Martin Herman <Martin.I.Herman@jpl.nasa.gov>
Subject: Waiver Request (vibration fastners)
X-Sender: miherman@pop.jpl.nasa.gov
To: Mark.A.Weilert@jpl.nasa.gov
Cc: Henry.Abakians@jpl.nasa.gov

Date: Thu, 15 May 2003 11:41:18 -0700
To: Matt Griffin <Matt.Griffin@astro.cf.ac.uk>, Eric Sawyer <e.c.sawyer@rl.ac.uk>, Chris Brockley-Blatt <cbb@mssl.ucl.ac.uk>, Berend Winter <bw@mssl.ucl.ac.uk>
From: Martin Herman <Martin.I.Herman@jpl.nasa.gov>
Subject: Waiver Request (vibration fastners)
Cc: Ben.A.Parvin@jpl.nasa.gov, Jamie Bock <jjb@astro.caltech.edu>, Gary Parks <Gary.S.Parks@jpl.nasa.gov>, kalyani@squid.jpl.nasa.gov
Bcc:
X-Attachments:

Dear Matt and SPIRE Team,

To refresh everyone's memory. We requested the following information:

What type of fasteners will be used in Europe to mount the BDA? In our ICD, 6-32 fasteners are called for. However, the current test hardware uses 8-32 fasteners. We are looking to be consistent with the flight implementation.

The answer (Thanks Chris) was 6-32. Our current test fixture uses 8-32 and we are getting ready for vibration testing of the CQM next week. Therefore, we had a mechanical engineer look into this issue. His (Paul MacNeal) response was:

> It will acceptable to use four #8-32 fasteners for the vibration tests at JPL. The reasons are....
>
> 1) The test fixture has already been built using #8-32 tapped holes,
> 2) The use of #6-32 fasteners torqued to full value should be able to resist over 200 G's of lateral force before allowing slippage, and therefore is not a critical component of the vibration test, and
> 3) The test is primarily performed to verify integrity of the flexures, braid, and other components, and not the interface fasteners.

Based on this information, we are requesting a waiver for the CQM PLW vibration and for future QM, CQM, PFM and FS tests. The change for future test is small, but the fiscal situation is extremely challenging and no technical risk to the program is evident with the existing approach.

Thanks,
Marty

14. ALTERNATE OR EQUIVALENT ITEMS MAY BE USED FOR THIS ITEM WITH PRIOR ENGINEERING APPROVAL.

13. SEAL SHIPPING CONTAINER USING ITEMS 28, LID, 30, SCREWS, 31, O-RING, AND ITEM 32, PLUG. TORQUE ITEM 30, SCREWS TO 1.9 N*M PLUS RUNNING TORQUE PER JPL SPEC ES517040. TORQUE ITEM 32, PLUG TO 7.3 N*M PLUS RUNNING TORQUE PER JPL SPEC ES517040.

12. SECURE FLEXURE RING OF ITEM 1 OR 2, TO ITEM 26, USING ITEM 29, NUTS. TIGHTEN NUTS HALF TURN PAST FINGER TIGHT.

11. INSTALL ITEMS 26, MOUNT, INTO ITEM 27, SHIPPING BASE. TORQUE TO 200 N*MM PLUS RUNNING TORQUE PER JPL SPEC ES517040.

10. FOR -7 CONFIGURATION, SECURE ITEM 39, UNION NUT, TO ITEM 35, MASS SIMULATOR USING ITEM 40, SET SCREW, AND ITEM 25 ADHESIVE. TORQUE TO 1.7-2.2 N*M PER JPL SPEC ES517040. SECURE ITEM 33, ACCELEROMETER, TO ITEM 39, UNION NUT AND TORQUE TO 1.7-2.2 N*M PER JPL SPEC ES517040.

9. FOR -6, -7 AND -9 CONFIGURATION, SECURE ITEM 10, OR 36, ACCELEROMETER MOUNT, OR ITEM 43, ACCELEROMETER SIMULATOR, TO ITEM 9 OR 35, MASS SIMULATOR USING ITEM 22, SCREW. TORQUE TO 200 N*MM PLUS RUNNING TORQUE PER JPL SPEC ES517040.

8. FOR -7 CONFIGURATION, SECURE ITEM 33, ACCELEROMETER, TO ITEM 36, ACCELEROMETER MOUNT. TORQUE ITEM 33, ACCELEROMETER, TO 1.7-2.2 N*M PER JPL SPEC ES517040. CONNECT ITEM 34, CABLE, TO ITEM 33, ACCELEROMETER.

7. FOR -6 CONFIGURATION, BOND ITEM 37, ACCELEROMETER, TO ITEM 10, ACCELEROMETER MOUNT, USING ITEM 25, EPOXY.

6. FOR ALL CONFIGURATIONS EXCEPT -6, -7, AND -9, INSTALL ITEM 17, SCREW, INTO ITEM 11 OR 49, CAN. TORQUE TO 425 N*MM PER JPL SPEC ES517040.

5. FOR ALL CONFIGURATIONS EXCEPT -6 AND -7, SECURE ITEM 11, 42, OR 49, CAN AND ITEM 45, LIGHT SEAL TO FLEXURE RING OF ITEM 1 OR 2, USING ITEM 24, SCREW, AND ITEM 21, SPRING WASHER. TORQUE TO 200 N*MM PER JPL SPEC ES517040.

4. FOR ALL CONFIGURATIONS EXCEPT -6, -7, -8, AND -9, SECURE ITEM 12, 13, 14, 15, OR 16, FILTER, TO ITEM 1 OR 2, USING ITEM 23 OR 48, SCREW, ITEM 19, NUT, AND ITEM 21, SPRING WASHER. TORQUE TO 200 N*MM PER JPL SPEC ES517040.

3. FOR ALL CONFIGURATIONS EXCEPT -6, -7, AND -9, BEND THERMAL STRAP ON ITEM 3, 4, 5, 6, 7, OR 8 AND FASTEN TO ITEM 1 OR 2. FOR -9 CONFIGURATION SECURE ITEM 44, THERMAL STRAP SIMULATOR IN PLACE OF THERMAL STRAP. USE ITEM 22, SCREW, AND ITEM 46, WASHER AND TORQUE TO 100 N*MM FOR TEMPORARY INSTALLATION ONLY.

2. SECURE ITEM 3, 4, 5, 6, 7, 8, 9, OR 35, TO ITEM 1 OR 2 USING ITEM 19, NUT. FOR ALL CONFIGURATIONS EXCEPT -6 AND -7, SECURE CONNECTOR BRACKET OF ITEM 3, 4, 5, 6, 7, 8, OR 41 TO FLEXURE RING OF ITEM 1 OR 2, USING ITEM 18, SCREW, AND ITEM 21, SPRING WASHER. TORQUE TO 200 N*MM PER JPL SPEC ES517040. SPOT BOND ITEM 19, NUT USING ITEM 25, EPOXY ON ALL CONFIGURATIONS EXCEPT -6 AND -7.

1. FOR CONFIGURATIONS -7 AND -9, SECURE ITEM 33, ACCELEROMETER, TO ITEM 35, MASS SIMULATOR, ROTATING CONNECTOR TO ALLOW CABLE TO EXIT TOWARD TOP OF MASS SIMULATOR. TORQUE ITEM 38, SET SCREW, AGAINST ITEM 33, ACCELEROMETER, TO 1.7-2.2 N*M PER JPL SPEC ES517040. CONNECT ITEM 34, CABLE, TO ITEM 33, ACCELEROMETER.

NOTES: UNLESS OTHERWISE SPECIFIED

16. FOR -2 AND -3 CONFIGURATIONS, SECURE CONNECTOR BRACKETS OF ITEM 5 OR 6, TO ITEM 49, CAN, USING ITEM 50, SCREW. TORQUE TO 180 N*MM PER JPL SPEC ES517040.

15. FOR CONFIGURATIONS EXCEPT -6, -7, AND -9, MARK AS SHOWN WITH ITEM 47, EPOXY INK, USE APPROPRIATE DASH NO., S/N, MODEL (CQM/PFM) AND TYPE (P/LW, S/LW, ETC.).

REVISIONS

LTR	ZONE	DESCRIPTION	CODE	DWN	CHK	STRUCT	MATL	THRM CONT			ENGR	DSGN SUPV	DATA MGT	RELEASE DATE
A		INITIAL RELEASE	B	SEE TITLE BLOCK									RGB	03/15/04
B		ADDED ITEM 51, ADDED VIEW SH4, MOVED VIEW FROM SH2 TO SH4	B											

PARTS LIST

-9	-8	-7	-6	-5	-4	-3	-2	-1	ITEM NO	REF DES	CAGE NO	PART OR IDENTIFYING NO	NOMENCLATURE OR DESCRIPTION	SPECIFICATION	MATERIAL OR NOTE	ZONE
						1	1		51			10209903-1	RING, SPACER			
						4	4		50			NA0070-016004	SCREW, MACHINE FLUSH HEAD	NA0070	A-286 CRES	
						1	1		49			10209805-2	CAN, LIGHT			
				6	6				48			NA0068A016012	SCREW, MACHINE PAN HEAD	NA0068	A-286 CRES	
	AR			AR	AR	AR	AR	AR	47				EPOXY INK, BLACK			
	2			2	2	2	2	2	46			ST12259-020	WASHER, COUNTERSUNK, LUBRICATED	ST12259	A-286 CRES	
	1			1	1	1	1	1	45			10209807-1	SEAL, LIGHT			
1									44			10209847-1	SIMULATOR, THERMAL STRAP			
1									43			10209744-1	MASS SIMULATOR, ACCELEROMETER			
1									42			10217688-1	CAN, LIGHT, STM			
1									41			10217680-1	DUMMY BOLOMETER			
		1							40		OE328	92313A829	SET SCREW, 10-32 UNF X 1/2"		MCMASTER CARR 14	
		1							39		OE328	90977A021	UNION NUT, 10-32 UNF		MCMASTER CARR 14	
1		1							38		OE328	92313A824	SET SCREW, 10-32 UNF X 3/16"		MCMASTER CARR 14	
			1						37				ACCELEROMETER, THREE AXIS			
		1							36			10209746-2	MOUNT, ACCELEROMETER			
1		1							35			10209745-2	MASS SIMULATOR			
1		3							34			6011 A10	CABLE, ACCELEROMETER		DYTRAN	
1		3							33			3031 B5	ACCELEROMETER, SINGLE AXIS		DYTRAN	
1	1	1	1	1	1	1	1	1	32		SE027	2 P50N	PLUG, O-RING		PARKER FLUID CONNECTORS 14	
1	1	1	1	1	1	1	1	1	31		OE328	9262K331	O-RING, 114.5mm ID X 3mm WIDTH		MCMASTER CARR 14	
8	8	8	8	8	8	8	8	8	30			MS5197-50	SCREW, #8-32 UNC X 1.25"	MS5197	14	
4	4	4	4	4	4	4	4	4	29			NA0034C040	NUT, SELF LOCKING, HEX EXTENDED WASHER, 1100 MPa	NA0034	A-286 CRES 14	
1	1	1	1	1	1	1	1	1	28			10209809-1	CONTAINER, SHIPPING, LID			
1	1	1	1	1	1	1	1	1	27			10209808-1	CONTAINER, SHIPPING, BASE			
4	4	4	4	4	4	4	4	4	26		OE328	9217K32	MOUNT, NATURAL RUBBER, SANDWICH, M4 X 0.7		MCMASTER CARR 14	
AR	AR	AR	AR	AR	AR	AR	AR	AR	25			EC 2216 A/B	EPOXY			
4				4	4	4	4	4	24			NA0069-016010	SCREW, CAP, SOCKET HEAD. FULL THREAD, 1100 MPa	NA0069	A-286 CRES	
						6	6	6	23			NA0068A016010	SCREW, MACHINE PAN HEAD	NA0068	A-286 CRES	
6	2	4	4	2	2	2	2	2	22			NA0069-020010	SCREW, CAP, SOCKET HEAD. FULL THREAD, 1100 MPa	NA0069	A-286 CRES	
20	20			20	20	20	20	20	21			B0187-010-S	BELLEVILLE SPRING WASHER			
									20							
4	4	4	4	6	6	6	6	6	19			934-A2 M1.6 X 0.35	NUT	DIN 934	A-286 CRES	
4	4			4	4	4	4	4	18			NA0069-016004	SCREW, CAP, SOCKET HEAD. FULL THREAD, 1100 MPa	NA0069	A-286 CRES	
	2			2	2	2	2	2	17			NA0069-040008	SCREW, CAP, SOCKET HEAD. FULL THREAD, 1100 MPa	NA0069	A-286 CRES	
				1					16			S/SW FILTER	S/SW FILTER			
					1				15			S/LW FILTER	S/LW FILTER			
						1			14			P/SW FILTER	P/SW FILTER			
							1		13			P/MW FILTER	P/MW FILTER			
								1	12			P/LW FILTER	P/LW FILTER			
	1			1	1			1	11			10209805-1	CAN, LIGHT			
			1						10			10209746-1	MOUNT, ACCELEROMETER			
			1						9			10209745-1	MASS SIMULATOR			
				1					8			10209850-1	DETECTOR ASSEMBLY, SPECTROMETER SHORT WAVE			
					1				7			10209840-1	DETECTOR ASSEMBLY, SPECTROMETER LONG WAVE			
						1			6			10209830-1	DETECTOR ASSEMBLY, PHOTOMETER SHORT WAVE			
							1		5			10209820-1	DETECTOR ASSEMBLY, PHOTOMETER MEDIUM WAVE			
	1								4			10209810-2	DETECTOR ASSEMBLY, PHOTOMETER LONG WAVE SIMULATOR			
								1	3			10209810-1	DETECTOR ASSEMBLY, PHOTOMETER LONG WAVE			
								1	2			10209860-2	SUSPENSION ASSEMBLY			
1	1	1	1	1	1	1	1		1			10209860-1	SUSPENSION ASSEMBLY			

QTY REQD

MATERIAL

METRIC

THIRD ANGLE PROJECTION

NEXT ASSEMBLY	USED ON
	SPIRE

APPLICATION

UNLESS OTHERWISE SPECIFIED
DIMENSIONS ARE IN MILLIMETERS
LINEAR TOLERANCES:
0-6 ± 0.1
OVER 6-30 ± 0.2
OVER 30-120 ± 0.3
OVER 120-315 ± 0.5
OVER 315-1000 ± 0.8
OVER 1000 ± 1.2
ANGULAR TOLERANCES: ± 0.5°
MACHINE FINISH (MICROMETERS) 3.2
DO NOT SCALE DRAWING
INTERPRET DWG PER ASME Y14.100M

CONTRACT NO 1244858

		APPD	DATE
DWN	D. CRUMB		03/11/04
CHK	R MCNABB		03/11/04
STRUCT	P MACNEAL		03/11/04
MATL	M KNOPP		03/15/04
THRM CONT			
ENGR	M WEILERT		03/11/04
DSGN SUPV			

JET PROPULSION LABORATORY
CALIFORNIA INSTITUTE OF TECHNOLOGY
PASADENA, CA 91109
RELEASED THROUGH EDMG

BOLOMETER DETECTOR ASSEMBLY

SIZE	CAGE NO		REV
A1	23835	10209800	B
SCALE NONE		UNCLASSIFIED	SHEET 1 OF 4

REV 2/00

A1 10209800

AutoCAD GENERATED

Released on DEC-09-2004 by Richard G Bannister and signed by Richard S Mcnabb CHK, Paul D Macneal STRU, Michael D Knopp MATL, Dustin J Crumb DEGN, Mark A Weilert COGE, Richard G Bannister

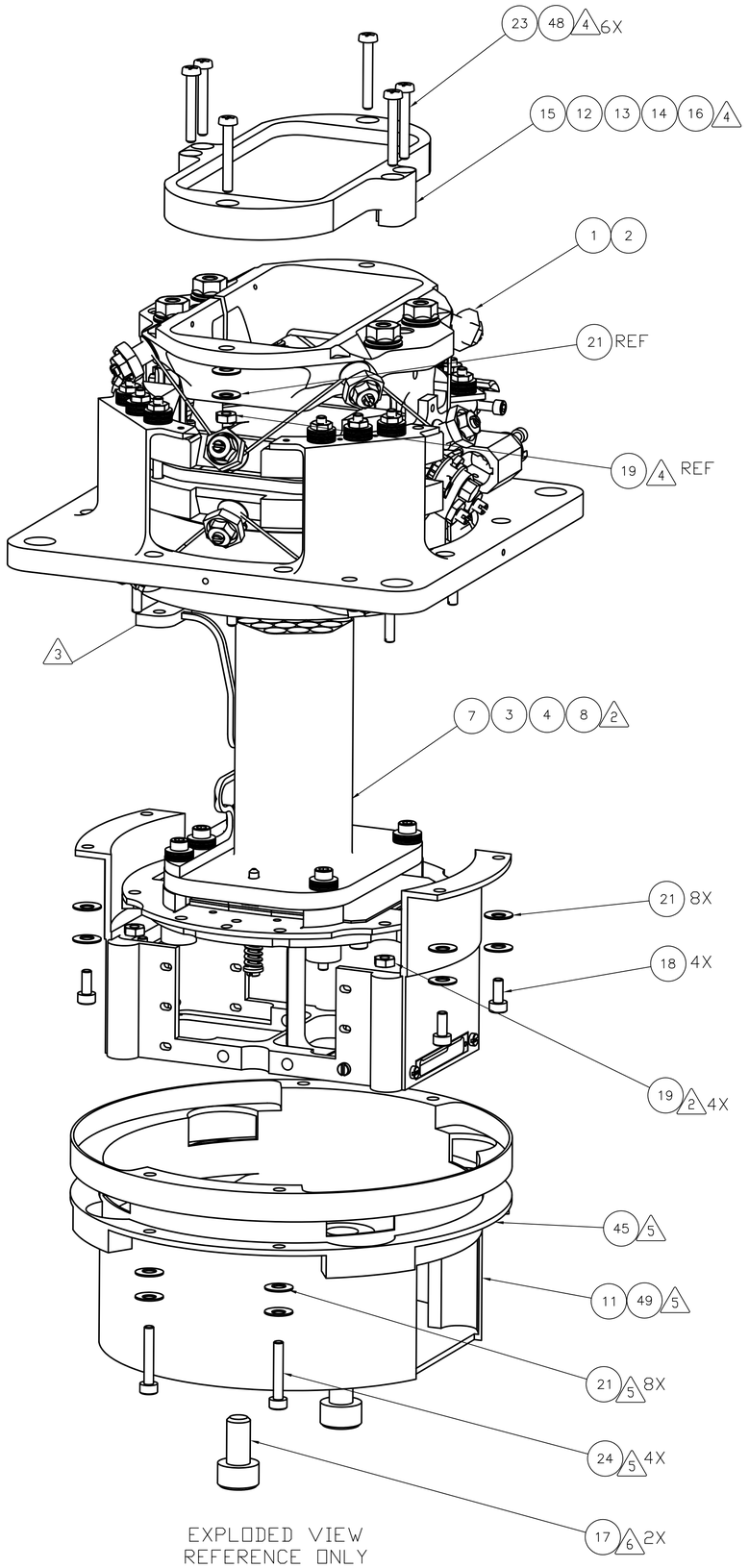

EXPLODED VIEW
REFERENCE ONLY
-4 CONFIGURATION SHOWN
-1, -5 CONFIGURATIONS ARE SIMILAR
-8 CONFIGURATION SIMILAR WITHOUT FILTER

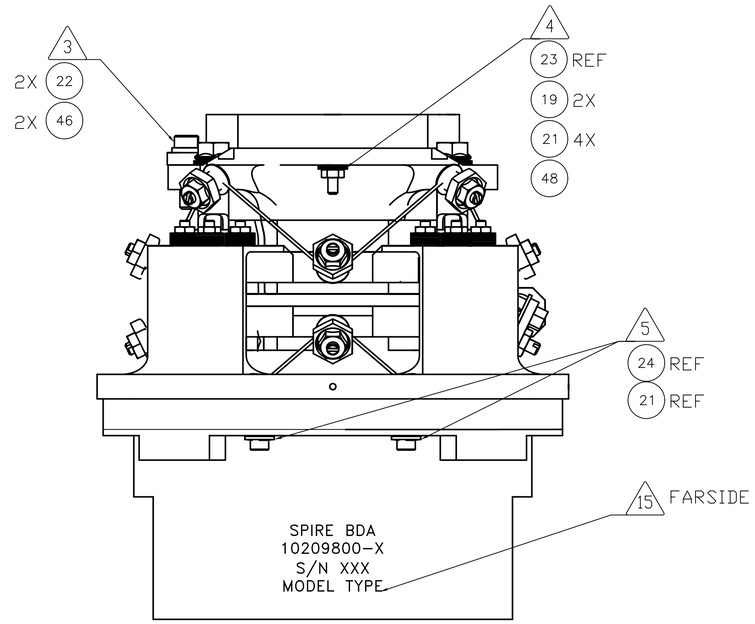

-4 CONFIGURATION SHOWN
-1, -2, -3, -5 CONFIGURATIONS ARE SIMILAR
-8 CONFIGURATION SIMILAR WITHOUT FILTER

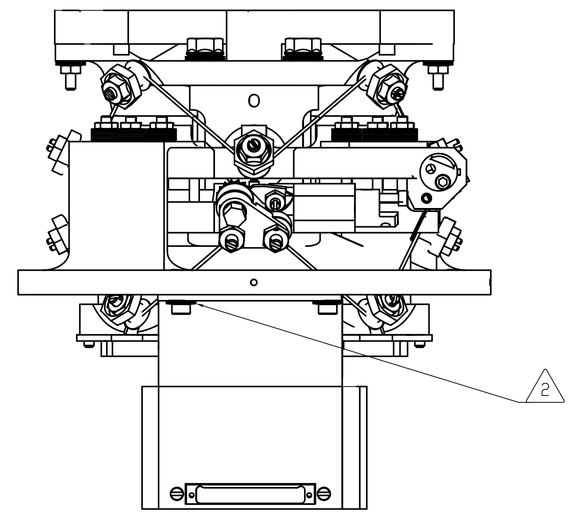

COMPONENTS REMOVED FOR CLARITY
-4 CONFIGURATION SHOWN
-1, -2, -3, -5 CONFIGURATIONS ARE SIMILAR
-8 CONFIGURATION SIMILAR WITHOUT FILTER

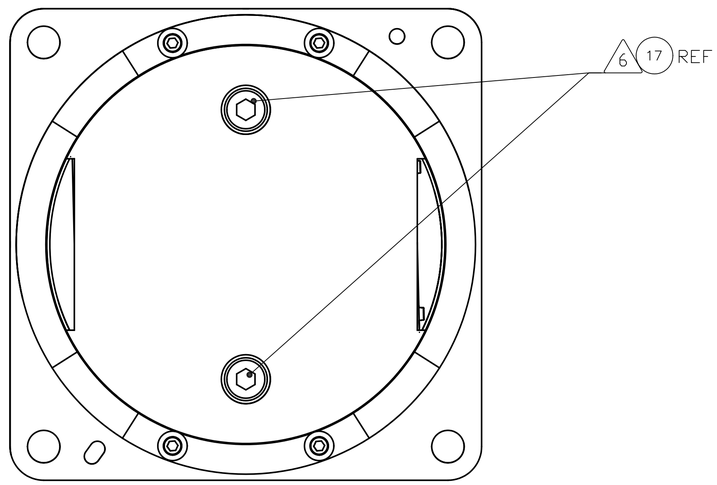

-4 CONFIGURATION SHOWN
-1 AND -5 CONFIGURATIONS ARE SIMILAR
-8 CONFIGURATION SIMILAR WITHOUT FILTER

SIZE	CAGE NO		REV
A1	23835	10209800	B
SCALE NONE	UNCLASSIFIED	SHEET 2 OF 4	

REV 2/00

AutoCAD GENERATED

10209800

Released on DEC-09-2004 by Richard G Bannister and signed by Richard S Mcnabb CHK, Paul D Macneal STRU, Michael D Knopp MATL, Dustin J Crumb DEGN, Mark A Weiler COGE, Richard G Bannister

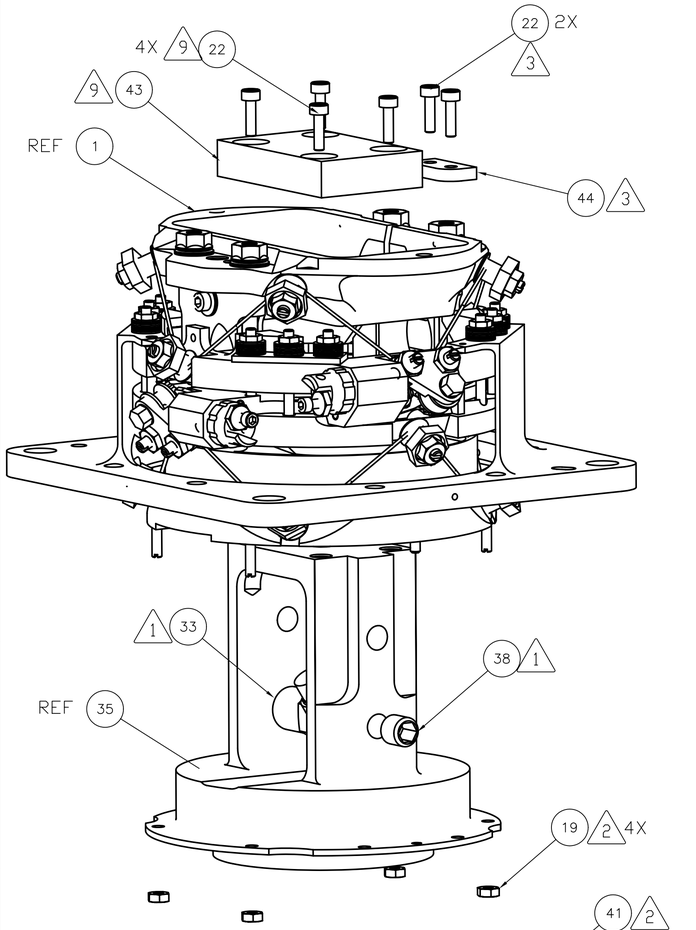

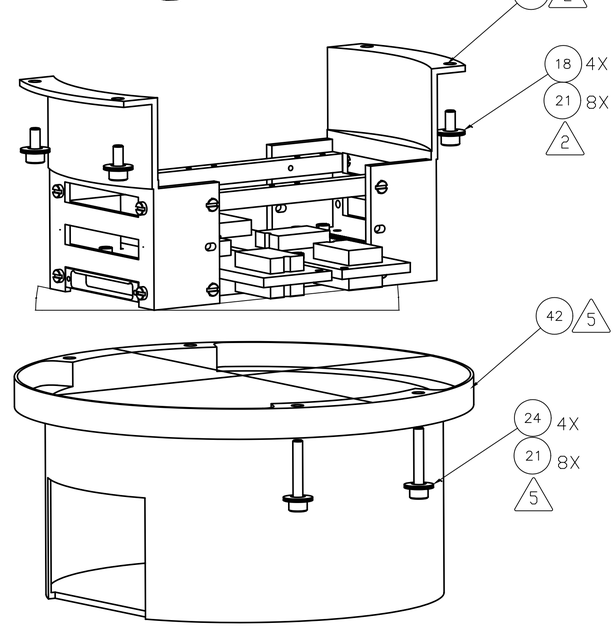

GENERAL VIEW
REFERENCE ONLY
SCALE: NONE
-9 CONFIGURATION,

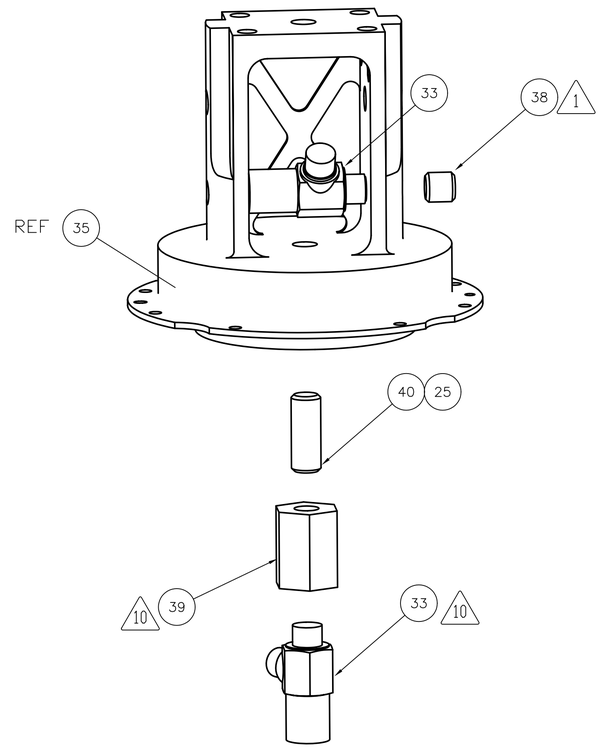

GENERAL VIEW
REFERENCE ONLY
SCALE: NONE
-7 CONFIGURATION,
ONLY ACCELEROMETERS AND
MASS SIMULATOR SHOWN

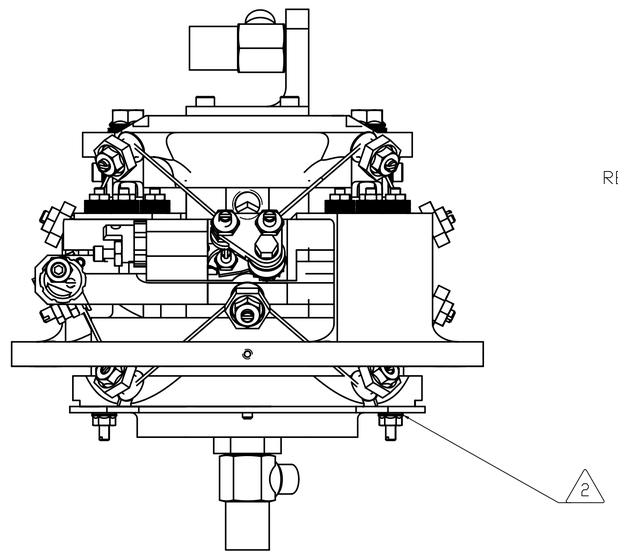

-7 CONFIGURATION

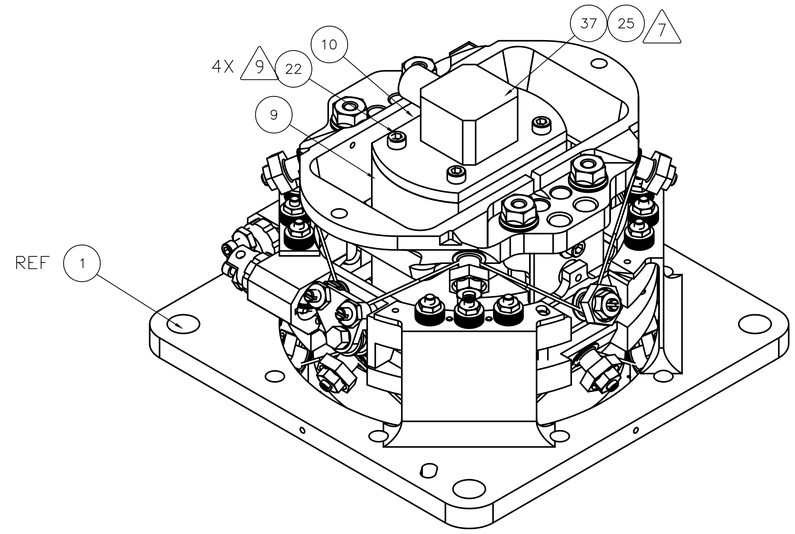

GENERAL VIEW
REFERENCE ONLY
SCALE: NONE
-6 CONFIGURATION

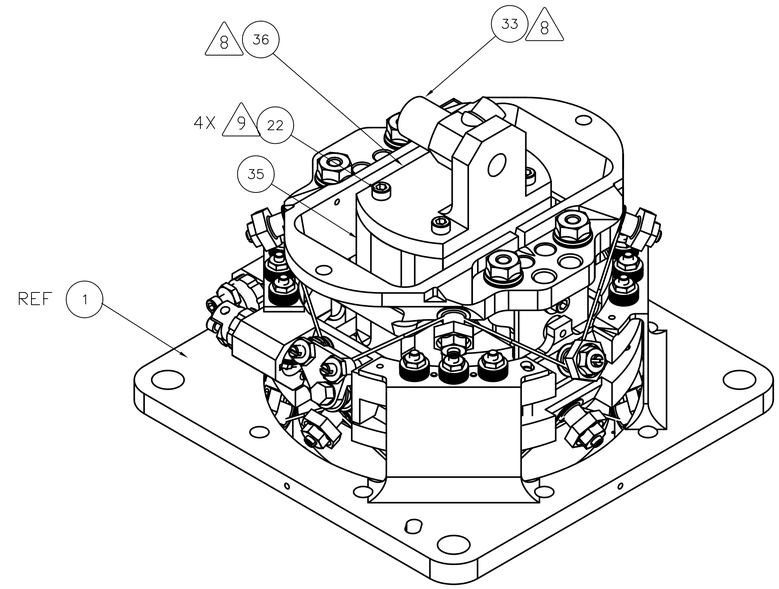

GENERAL VIEW
REFERENCE ONLY
SCALE: NONE
-7 CONFIGURATION

SIZE	CAGE NO		REV
A1	23835	10209800	B
SCALE NONE	UNCLASSIFIED	SHEET 3 OF 4	

REV 2/00

AutoCAD GENERATED

10209800

Released on DEC-09-2004 by Richard G Bannister and signed by Richard S Mcnabb CHK, Paul D Macneal STRU, Michael D Knopp MATL, Dustin J Crumb DEGN, Mark A Weilert COGE, Richard G Bannister

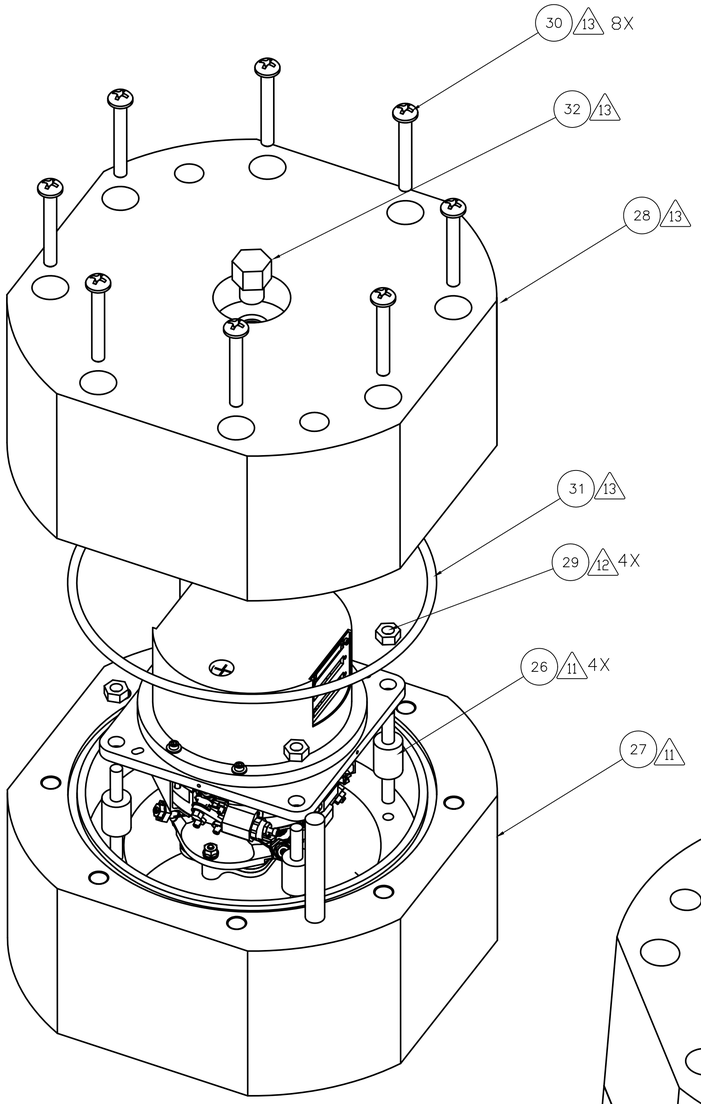

EXPLODED VIEW
REFERENCE ONLY
-5 CONFIGURATION
-1,-2,-3,-4, -8 AND -9 SIMILAR
-6 AND -7 SIMILAR WITH NO CAN

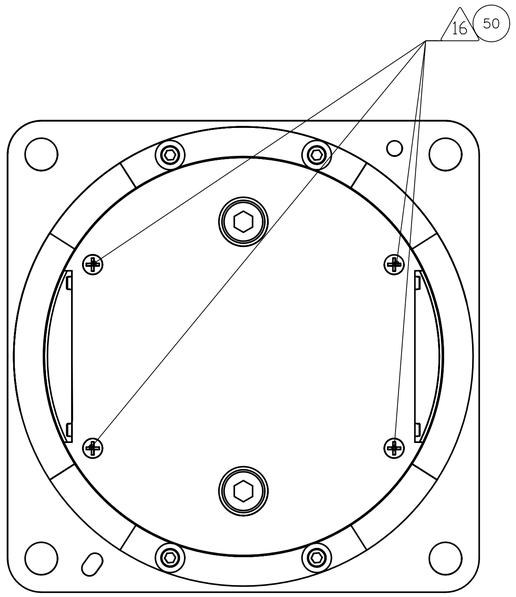

-2 CONFIGURATION SHOWN
-3 CONFIGURATION IS SIMILAR

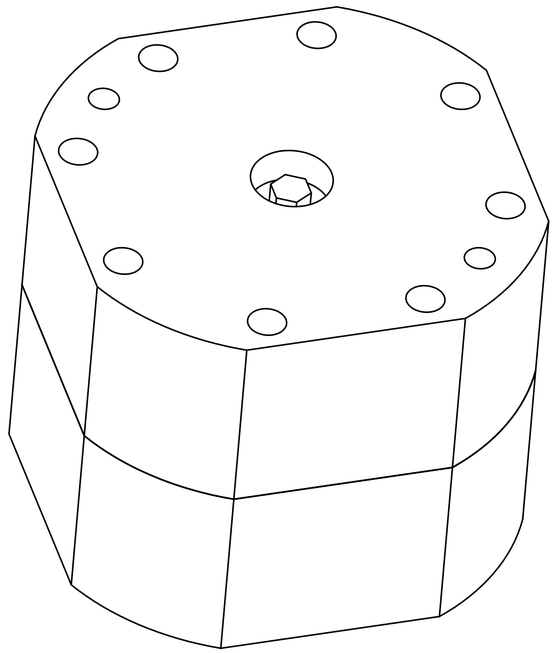

GENERAL VIEW
REFERENCE ONLY
SCALE: NONE
ALL CONFIGURATIONS

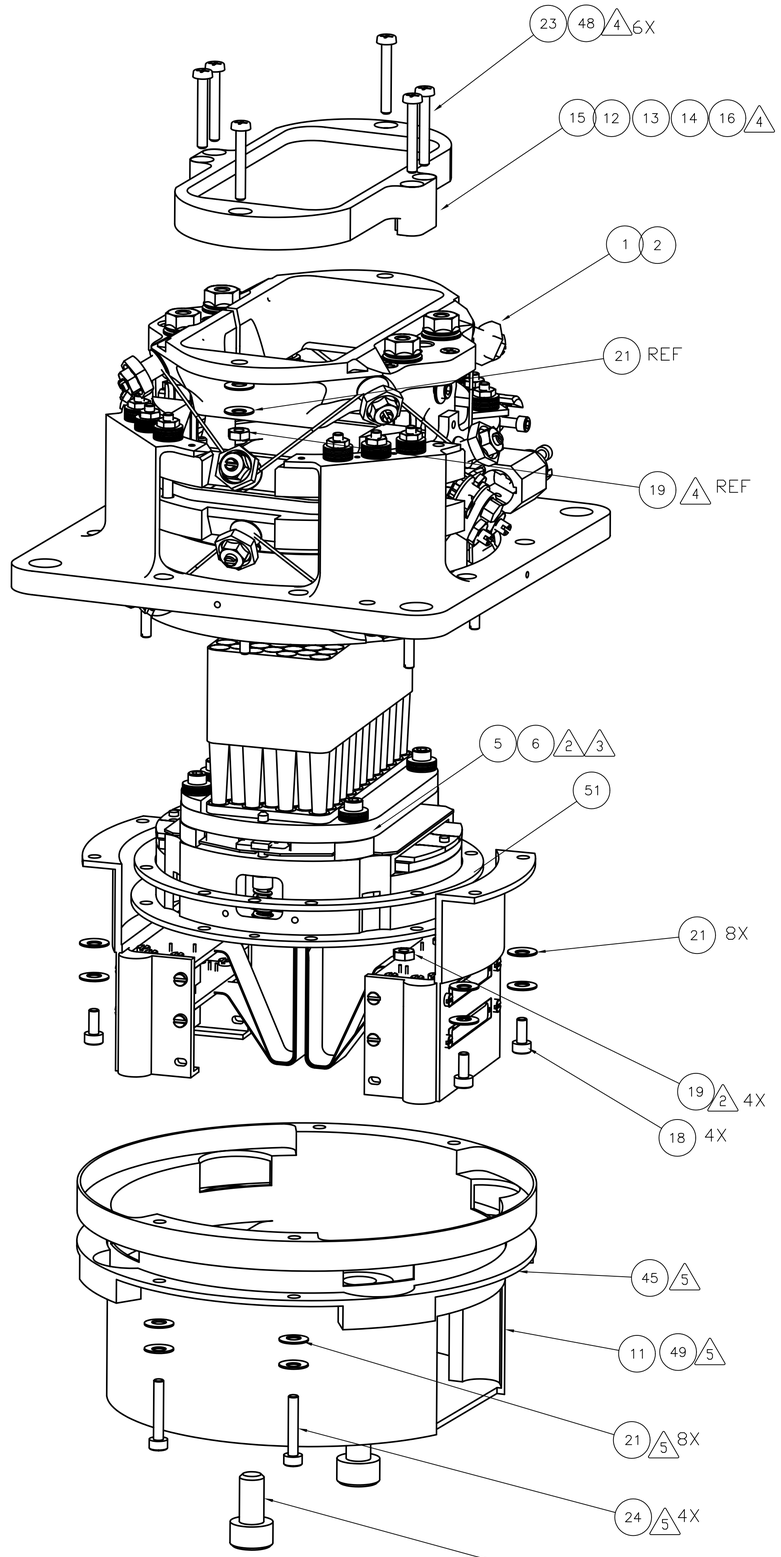

EXPLODED VIEW
REFERENCE ONLY
-2 CONFIGURATION SHOWN
-3 CONFIGURATIONS SIMILAR

SIZE	CAGE NO		REV
A1	23835	10209800	B
SCALE NONE	UNCLASSIFIED	SHEET 4 OF 4	

10209800

AutoCAD GENERATED

REV 2/00

Released on DEC-09-2004 by Richard G Bannister and signed by Richard S Mcnabb CHK, Paul D Macneal STRU, Michael D Knopp MATL, Dustin J Crumb DEGN, Mark A Weilert COGE, Richard G Bannister

ECR/NCR List

PFM PSW BDA 10209800-3 S/N 013

NOTE: All of these have been incorporated into released drawings.

1. HR-SP-JPL-ECR-003 – Spectrometer BDA Envelope Height

2. HR-SP-JPL-ECR-005 – 300mK Stage Assembly – BDA Kapton cable routing design error.

3. HR-SP-JPL-NCR-005 – PMW and PSW focal position shift

CCLRC Rutherford Appleton Laboratory	DOCUMENT / ENGINEERING CHANGE REQUEST (ECR)	PRODUCT ASSURANCE Space Science and Technology Department

DCR / ECR Number:	HR-SP-JPL-ECR-003

Spacecraft / Project	**HERSCHEL**	**Originator's Name**	Martin Herman	
System / Experiment / Model	**SPIRE /**	**Signature**		
Sub-System		**Date**	November 20,2003	
Assembly		**Classification**	**Urgent**	**Routine**
Sub-Assembly		**Ref. Doc. / Drwg No.**	JPL dwg 10209721	
Item	Bolometer Detector Assembly (BDA)	**Reference**		

ECR/DCR Title	**Spectrometer BDA Envelope Height**

ECR Description

On the ICD Drawing 10209721 sheet 2, zone H4, the current maximum height dimension is 42.5 mm from the BDA mounting plate. This dimension needs to be changed to 43.6 to encompass the two spectrometer BDA types, SLW and SSW. Photometer BDA types do not require this change. The current dimension will be replaced with a note giving the two BDA type dependent values. The allowed 300mK stage shift given in note 9 will remain.

Need / Justification For Change

The Spectrometer BDA (types SLW and SSW) 300mK filter stacks were at some point increased in thickness due to the addition of a lens. This change was not flowed down into the BDA ICD. The SLW BDA S/N008 maximum height was measured at 44.04 mm from the mounting plate, which is 1.04 mm higher than the current allowed ICD range. The nominal 42.5 mm height plus the 0.5mm allowed displacement of the 300mK stage (see ICD note 9) gives the current 43.0 mm max height.

Affected Items / Work package (Title, Number, Issue, Para)

ICD drawing 10209721 rev B

Related Factors (Highlight as applicable)

Spacecraft	Performance	Power	Others (Specify)
Ground Segment	Elect. Interfaces	Weight	
Launch Vehicle	Mech. Interfaces	Schedule	
Payload	Test/Verification	Cost	

Attachments	Distribution

Change Approved Project		**Change Approved Customer**	
Project Closure		**Customer Closure**	

CCLRC Rutherford Appleton Laboratory	DOCUMENT / ENGINEERING CHANGE REQUEST (ECR)	PRODUCT ASSURANCE Space Science and Technology Department

DCR / ECR Number:	HR-SP-JPL-ECR-005

Spacecraft / Project	**HERSCHEL**	**Originator's Name**	Anthony Turner	
System / Experiment / Model	**SPIRE /**	**Signature**		
Sub-System		**Date**	1/19/2004	
Assembly	10209800 -2 and -3	**Classification**	**Urgent**	**Routine**
Sub-Assembly	10209820 and 10209830	**Ref. Doc. / Drwg No.**	10209775	
Item	Kapton cables assemblies, 10217706 and 10209825	**Reference**		

ECR/DCR Title	**300mk Stage Assembly-BDA Kapton cable routing design error**

ECR Description

Kapton cable right (10217705) was designed for a length of 73.93mm and Kapton cable left (10209824) was designed for a length of 68.87mm. This length designation forces the shorter cable to route into connector positions J01 and J02 on the 10209820 and 10209830 Detector Assembly-BDA builds while the longer cable will route into the J03 and J04 connector positions. This routing will cause a swap in the pixel maps for each connector denoted in wiring schematic 10209725-A under the 10209800-2 and 10209800-3 columns. Below is the correct switch in pixel maps for each column (only the first pixel of the original column is denoted for all connectors but the entire column should be switched accordingly):

10209800-2 P/MW: J01 – first pixel A7, J02 – first pixel E7, J03- first pixel A13, J04 – first pixel R1

10209800-3 P/SW: J01 – first pixel D6, J02 – first pixel F12, J03- first pixel R1, J04 – first pixel E1

Need / Justification For Change

The current flex cable assembly/routing will not correctly map to the pixel locations denoted in 10209725-A wiring schematic, SPIRE. The current schedule/budget will not allow for an acquisition of replacement cables which may have at least a 12-20 week lead from the manufacture. All sub-assembly builds (10209820 and 10209830) would have to be placed on hold until the new cables arrive. The schedule impact could be up to 6 months. The above pixel map designation change would have a minimal effect on the software side, save from rebuilding flex kapton cables and keep the project on its current schedule.

Affected Items / Work package (Title, Number, Issue, Para)

All 10209820 and 10209830 sub assemblies.
Drawing 10209775-A

Related Factors (Highlight as applicable)

Spacecraft	Performance	Power	Others (Specify)
Ground Segment	Elect. Interfaces	Weight	
Launch Vehicle	Mech. Interfaces	Schedule	
Payload	Test/Verification	Cost	

Attachments	Distribution

Change Approved Project		**Change Approved Customer**	
Project Closure		**Customer Closure**	

CCLRC Rutherford Appleton Laboratory	NON-CONFORMANCE REPORT (NCR)	PRODUCT ASSURANCE Space Science and Technology Department

NCR Number:	HR-SP-JPL-NCR-006

Spacecraft / Project	**Herschel**	**Originator's Name**	Martin Herman	
Experiment / Model	SPIRE / PFM+FS	**Signature**		
Sub-System		**Date**	July 1, 2004	
Assembly		**Level (Highlight if applicable)**	Major	Minor
Sub-Assembly				
Item	PMW and PSW BDA (10209800 -2 and -3)	**NRB Reference**		
Serial Number	11, 12, 14,15 (TBC)			

NCR Occurred During (Highlight if applicable)	Manufacture	Inspection	Test	Integration	Other

NCR Title	**PMW and PSW focal position shift**

NCR Description

An internal mechanical interference problem discovered during the manufacture of the PMW BDA has required a shift of the feedhorn and detector position with respect to the exterior envelope of the BDA. The exterior BDA envelope is unchanged. This NCR applies to PFM and FS models of the PMW and PSW BDAs.

This problem causes a non-conformance with the focus position specified in the ICD drawing 10209721 (see sheet 2, zone G3, and values tabulated on sheets 5-7). The PMW nominal focus position is changed by 1.0mm from 33.2mm to 32.2mm. The PSW focus position is changed by 1.2mm from 25mm to 23.8mm.

Front-short and back-short distances at the detectors are not affected by this change. The distance from the 300mK filter to the feedhorn entrance plane is increased by the shifts given above.

Other effects of this NCR are a small mass increase (approximately 4 grams) and a slight CG shift (estimated z-cg decrease of ~0.5mm). (Note that the PFM PMW, which is the only affected unit yet assembled, has a mass of 605g including the mass increase. This is still less than the 632g ICD limit.)

Cause of NCR

Disposition / Corrective Action

Document or Drawing Affected (Title, Number & Issue)

Estimated COST OF NCR (cost of : correction, Materials, Resource, and delay to Project etc.)

NCR Number:	HR-SP-JPL-NCR-006

NCR CLOSED (Signatures Required)	PA Manager (Or Deputy)	Project Manager (Or Deputy)	Date

Waiver List

1) **HR-SP-JPL-RFW-005 (Sine Vibration Omission)**

2) **HR-SP-JPL-RFW-006 (Vibration Test Levels)**

CCLRC Rutherford Appleton Laboratory	REQUEST FOR WAIVER / DEVIATION (RFW/RFD)	PRODUCT ASSURANCE Space Science and Technology Department

RFW/RFD Number:	HR-SP-JPL-RFW-005

Spacecraft / Project	Herschel	**Originator's Name**	Kalyani Sukhatme	
System / Experiment / Model	SPIRE	**Signature / Date**		
Sub-System	detectors	**Request Type** (Highlight applicable request)	Waiver (RFW)	Deviation (RFD)
Assembly		**Organisation**	Jet Propulsion Laboratory	
Sub-Assembly		**Ref. Doc. / Drwg No.**	SPIRE-JPL-PRJ-000456	
Item		**References**		
Serial No.				

RFW/RFD Title	**BDA and JFET module sine test deletion**

End Items(s) Affected (Hardware, Software)

Name	CI-Number	Model(s)
Bolometric Detector Assemblies JFET Modules		CQM, PFM, FS CQM, PFM, FS

Requirement / Interface Documents Affected

Specification/Drawing Title	Number	Issue	Date	App. Paragraph
BDA-SSSD (SPIRE-JPL-PRJ-000456)		3.2	Jan 7, 2003	BDA-DES-10, JFET-DES-07

Description of Deviation / Discrepancy / Non-Conformance

High Level Sine- Vibe Test is not performed on these units

Other Items or Requirements (Potentially) Affected

Need for RFW/RFD and Rationale for Acceptance

The hardware has to be qualified under a cold vibration test and is installed in the cold vibration facility for the purpose of the test. The high level sine vibration test configuration will put the hardware and the personnel at risk since the cold vibration facility is not structurally capable of withstanding the high levels. Obtaining additional resources (cost and schedule) for developing a new set-up is not feasible at this time.

	Approved	Rejected	Name	Date
JPL Engineering:				
JPL Product Assurance:				
CCB-Chairman:				
Principal Investigator				
Product Assurance:				
Co-Investigator				
Prime Contractor				
ESA Project Office				

CCLRC Rutherford Appleton Laboratory	REQUEST FOR WAIVER / DEVIATION (RFW/RFD)	PRODUCT ASSURANCE Space Science and Technology Department

RFW/RFD Number:	HR-SP-JPL-RFW-006

Spacecraft / Project	Herschel	**Originator's Name**		
System / Experiment / Model	SPIRE	**Signature / Date**		
Sub-System	Detector	**Request Type** (Highlight applicable request)	Waiver (RFW)	Deviation (RFD)
Assembly	BDA	**Organisation**	Jet Propulsion Laboratory	
Sub-Assembly		**Ref. Doc. / Drwg No.**		
Item		**References**		
Serial No.				

RFW/RFD Title	

End Items(s) Affected (Hardware, Software)

Name	CI-Number	Model(s)
BDA		QM, CQM, PFM, FS

Requirement / Interface Documents Affected

Specification/Drawing Title	Number	Issue	Date	App. Paragraph
BDA-SSSD	BDA-DES-10	3.2	Jan 7, 03	

Description of Deviation / Discrepancy / Non-Conformance

1) **Random Vibration Test Levels are not the same as given in the BDA-SSSD (Issue 3.2), BDA-Des-10**
2) **There are five different flavours of the BDA. The qualification vibration test is done on only one QM unit which is of the PLW type.**

Other Items or Requirements (Potentially) Affected

Need for RFW/RFD and Rationale for Acceptance

1. **The random vibration test levels are as specified by Berend Winter (MSSL) in an email on May 2, 2003, which superceded the BDA-SSSD**
2. **The qualification test program in using the PLW flavor as the only Qual Model, is given in Interoffice Memorandum, Oct. 3, 2003, Henry Abakians, Subject: SPIRE BDA Random Vibration Test Program [IOM 5132-03-167]**

	Approved	Rejected	Name	Date
Engineering:				
Product Assurance:				
CCB-Chairman:				
Principle Investigator				
Product Assurance:				
Co-Investigator				
Prime Contractor				

ESA Project Office				

JPL

INTEROFFICE MEMORANDUM
5132-03-167
October 3, 2003
Project: Herschel/Planck

TO: Martin Herman

FROM: Henry Abakians ha

SUBJECT: SPIRE BDA random vibration test program

This IOM outlines the random vibration test program for Herschel/Planck project's SPIRE element. Due to schedule and cost constrains, our proposed test program does not strictly conform to JPL's standard random vibration program; however, it maintains a medium to low risk posture.
The recommendations will concentrate on the vibration environment since that is the source of highest stresses on the unit. The SPIRE qualification program also includes thermal cycling and accelerated aging, but it will not be addressed in this IOM.

The SPIRE element of the JPL Herschel/Planck project has several Bolometer Detector Assemblies (BDA). These BDAs are identical in their outer housing, and primarily vary in a thermally isolated suspension which contains the bolometer array and the feedhorn (the suspension is held on to the housing via two rows of braided Kevlar strings). There are five flavors to these suspensions: PSW, PMW, PLW, SSW, SLW (P: photometer, S: spectrometer, LW: long wave, MW: medium wave, SW: short wave). The suspensions also vary in their mass and center of gravity (PLW the heaviest, SSW the lightest).

In a traditional JPL Qual/FA test program, a Qual unit for each BDA flavor would be tested (3-axis, 2 min. per axis), and all subsequent flight units would be FA tested (3-axis test, FA levels, 1 min. per axis). In a traditional Protoflight program, all flight units would be protoflight tested (3-axis test, Qual levels, 1 min. per axis).

The SPIRE element has evolved into a Qual/FA/Protoflight test program. We have built and successfully tested a qual unit (CQM, PLW). It was random vibrated at Qual levels and durations (2 minutes) in three axes. This unit successfully passed the random vibration test, and remained within the specifications (performance or otherwise). Our proposed test program for all subsequent BDAs is as follows:

BDA type	test program	random vibe axis	duration
PSW	PF	x	2 min
PMW	PF	x	2 min
PLW	Qual/PF	3 axis Qual	2min/axis
		PF-x axis only	1 min
SSW	PF	x	2 min
SLW	PF	x	2 min

The test program deviates from a standard JPL program; however, we believe it maintains an acceptable risk posture for the following reasons:

1-The vibration in the z-direction is substantially more benign than x and y. Therefore, we can eliminate the random vibration test in the z-direction for all flight units (this is based on the CQM test results).

2-There is sufficient cross-talk between x and y (based on CQM test results). Therefore, we can eliminate the y direction shake and perform the test in the x-direction for an additional 1 minute (x is the more severe direction; moreover, since we are not concerned with low cycle fatigue failure – substantiated by the CQM test - we feel justified in extending the x-direction test duration to 2 minutes, thus indirectly testing for y-direction).
While it is clearly more desirable to test in y-direction directly, eliminating this test is primarily driven by cost and schedule constraints: all our test are performed at or below 100K, thus a one axis vibration will require a minimum of 3 work days; however, extending a 1 minute test to 2 minutes will not impact schedule, cost, or the safety of the hardware.

3-We have tested the heaviest assembly (PLW) for our qualification program. This ensures that our design is validated for the highest possible stresses in the Kevlar string.

4- Force transducers will be utilized in 3 directions. Their responses will be correlated with the CQM results providing additional assurance on hardware workmanship, reliability and robustness.

Concurrence: _____
John Forgrave,
Environmental requirements Engineering, Group Supervisor

Concurrence: _____
Paul MacNeal, Dynamics Engineer
Herschel/Planck

Concurrence: _____ for
Tim Larson, Mission Assurance Manager
Herschel/Planck

Distribution:
Bill McAlpine
Margaret Frerking
Michael O'Connell
Gary Parks
Kalyani Sukhatme
Mark Weilert

Open Problem / Failure Report (PFR) List

Open PFR's on This Hardware (PFM PSW BDA 10209800-3 S/N 013):

NONE

Open PFR's on Similar Hardware:

NONE

SPIRE
Bolometer Detector Assembly
Handling Document

Prepared by
Mark Weilert

20 August, 2003
revised 20 Nov. 03

WARNINGS

BDA is Contamination Sensitive: Open Red Shipping container only in a FED-STD-209 Class 10000 clean room (ISO 14644-1 class 7) or better. Handle BDA with gloves only.

BDA is ESD Sensitive, handle with grounding straps, ESD-safe gloves and ESD smocks at an ESD-safe workstation. Note that no connector savers or other connector protection are shipped with the BDA, per the business agreement.

BDA is Fragile: Do not drop or otherwise shock. Take care to avoid applying unnecessary force to the Kevlar suspended portion of the BDA. In particular, do not torque the thermal strap interface fasteners to greater than 320 N*mm. The BDA is preferably held/supported either by its square mounting flange, or by the light-seal can which holds the electrical connectors. Note that the red shipping container provides only minimal shock isolation, and should be treated as equally fragile while the BDA is inside. Because the Kevlar tension is higher at room temperature than cold, **DO NOT SHAKE TEST AT ANY TEMPERATURE ABOVE 100K** (except for low-level survey shakes, 0.25g typical). A full level shake at room temperature risks **catastrophic** failure. Avoid touching Kevlar braid with anything, it is sensitive to abrasion or cutting by seemingly smooth objects.

BDA is Humidity Sensitive: The Kevlar tension increases with moisture absorption. Keep in a dry environment when possible during storage or while not being handled. (While being actively handled, higher humidity is acceptable to maintain ESD safety, 35-50% RH typical.)

BDA is Temperature Sensitive: The Kevlar tension and creep increases at high temperatures, **DO NOT BAKE OUT AT ABOVE 80°C.**

Unpacking Procedure:

The BDA is shipped in a multi-layer container. A custom shipping container (red) inside a case inside case. The case should be opened only in a reasonably clean area in order to protect the red shipping container, which should only be opened in a class 10000 or better clean room at an ESD-safe workstation. The red shipping container has three shock-monitors attached to the top, labeled 10g, 20g and 50g. The monitors have steel balls and springs which are contained between plastic rails if the unit has not seen the marked shock level. If the monitors have experienced their specified shock, some of the balls will be loose in the bottom. Please note the state of the three shock monitors and report the result to JPL. These monitors may need to be removed from the top of the red shipping container before it is opened, since they probably obstruct access to the vent plug. They are attached with a double-stick tape adhesive and may be pulled off by applying force to the white base. (Avoid just pulling on the clear case, as this will likely open up the monitor and spill the contents.) **NOTE: The cases holding the red shipping container must be returned to JPL for use in future shipments.**

Opening the Red Shipping Container:

An exploded view of the container is shown below. The top is the side with the vent plug in the center. Make sure the area around the plug is clean, then remove the plug to equalize the pressure. The 8 closeout screws are next loosened alternately (with a 1/8"

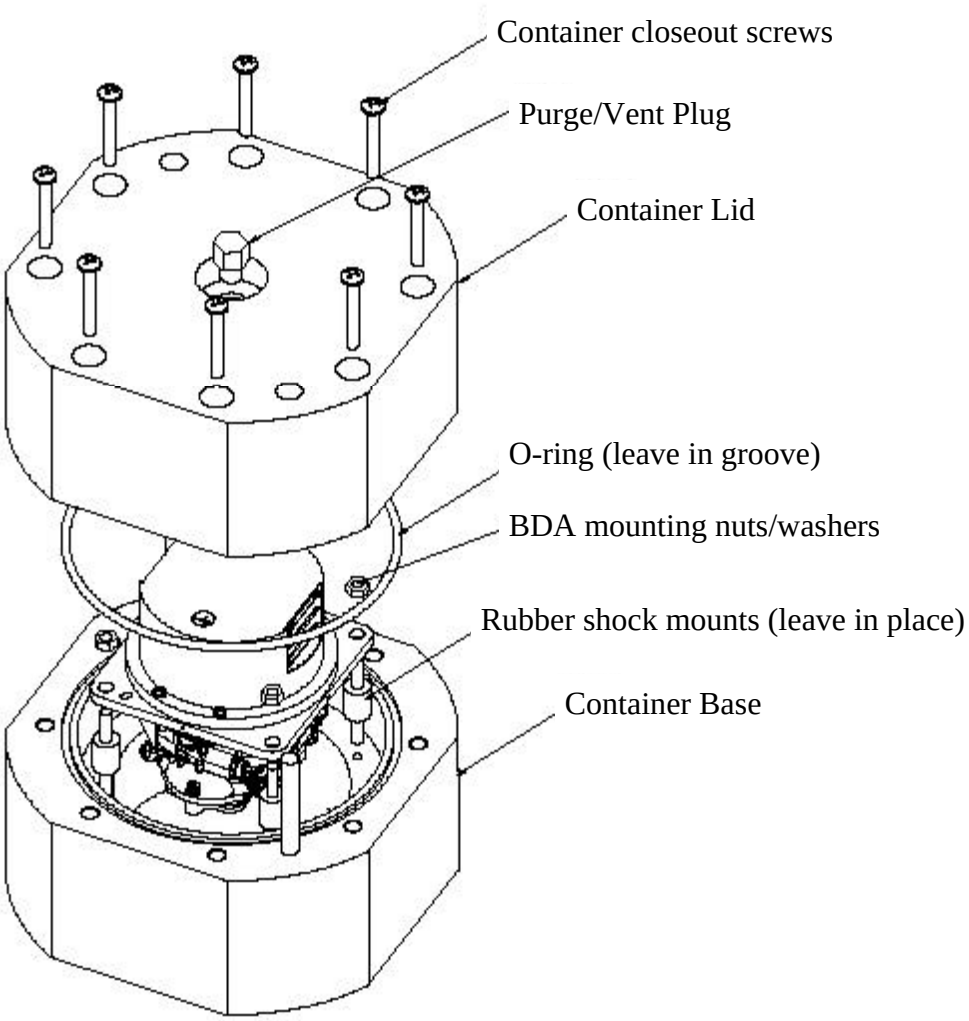

hex key) to relieve pressure on the o-ring seal, and then backed off completely to disengage the screws from the base. The container lid is then lifted straight up to open the container. Two guide pins prevent significant sideways motion of the lid until it is high enough to clear the BDA The BDA is removed from the shipping container base by removing the mounting nuts and washers from the rubber shock mounts and lifting the BDA straight up.

For re-installation of the BDA into the red container, note that the light can must be up, as shown, to prevent the container lid from hitting the BDA. Also, the epoxy terminations of the Kevlar braids should be oriented towards the cutouts in the container base.

BDA Electronic Handing Procedure

---TO BE PROVIDED ---

EIDP Coverpage For PSW BDA (SN013)

Unit Identfication							
Name	PSW BDA						
Part #	10209800-3						
S/N	#013						

Environmemtal Testing							
	Axes Tested	Temperature	Duration or Number of Cycles	Pass/Fail	Requirement	Source	Waiver #
Random Vibration Test	X	100 K	2 min per axis	P	X, Y, Z at 90 K 1 min per axis	SSSD Sec # 3.4	HR-SP-JPL-RFW-006
High Level Sine Vibe Test	None	NA	NA	NA	X, Y, Z at 90 K	SSSD Sec # 3.4	HR-SP-JPL-RFW-005
Bakeout	NA	NA	NA	NA	None (other than as part of the assembly procedure)	D-20549	
Thermal Cycles	NA	RoomT to ~ 6 K	2	P	1 thermal cycle roomT to 77 K (max 5)	D-20549	

Other Testing	Frequency [Hz]						
	Pre-full level	Post-full level			Minimum Performance	Source	Waiver #
Lowest Resonant Frequency	314 Hz	312 Hz			> 200 Hz (Goal: >250 Hz)	SSSD Sec # 3.1.3	NA
Metrology Measurements were performed before and after the Vibration Test and the Thermal Cycles							
	Motion in X/Y	Motion in Z		Meets Goal ?	Performance Goal	Source	Waiver #
Maximum motion due to Random Vibration Test	22 μm	47 μm		Y	125 μm in X/Y and 500 μm in Z	SSSD Sec # 3.1.1	NA
Maximum motion due to the 1st thermal cycle	15 μm	7.6 μm		Y	125 μm in X/Y and 500 μm in Z	SSSD Sec # 3.1.1	NA
Maximum motion due to the 2nd thermal cycle	16 μm	4.1 μm		Y	125 μm in X/Y and 500 μm in Z	SSSD Sec # 3.1.1	NA
Cumulative Maximum motion	31.5 μm	76.7 μm		Y	125 μm in X/Y and 500 μm in Z	SSSD Sec # 3.1.1	NA
Cold Continuity Measurements were made during each of the thermal cycles							
				Pass/Fail	Requirement	Source	Waiver #
Cold Continuity Test (1st Thermal Cycle)				P	None	NA	NA
Cold Continuity Test (2nd Thermal Cycle)				P	None	NA	NA

Sine

101605, Run 3, X axis

Spire BDA

P/N 10209800-, S/N : 013

Force Sum X

Before Shake, Cold

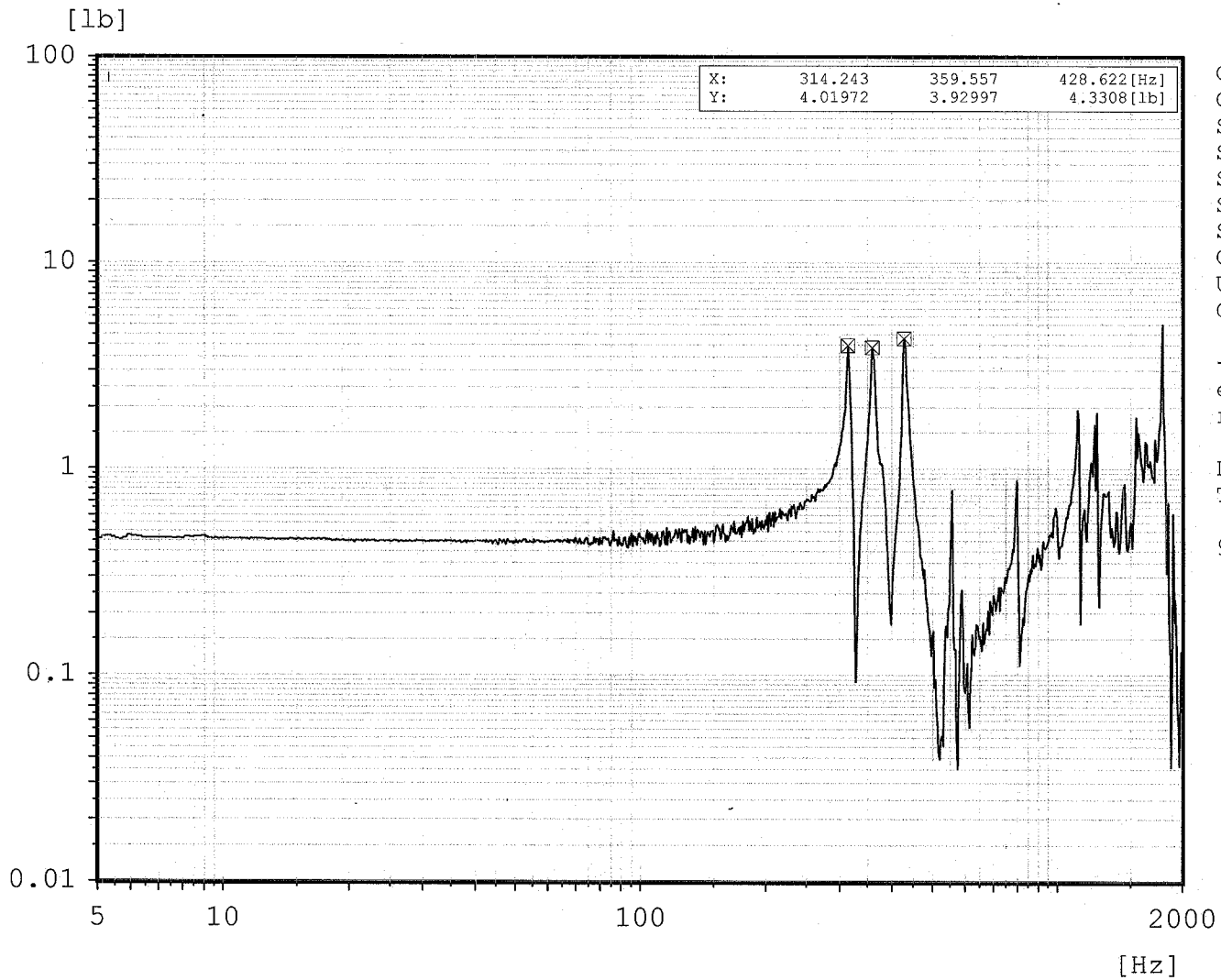

Chan.no: 6
Chan.type: W RMS
Sweep type: logarithmic
Sweeps done: 1
Sweeps req.: 1
Sweep direct.: up
Sweep rate: 4.00 Oct/min
Contr.strat.: Maximum
Unit: lb
Contr.strat.: Closed loop

-- Testing time --
elapsed: 000:02:09
remaining: 000:00:00

Date: 10-29-04
Time: 13:02:57

964#1/Amp #1/ M+P #2

C:\VcpNT\Daten\m+p\SPIRE\BDA\101605 run 3 xax.rsn

Sine

101605, Run 3, X axis

Spire BDA

P/N 10209800-, S/N : 013

Force Sum Y

Before Shake, Cold

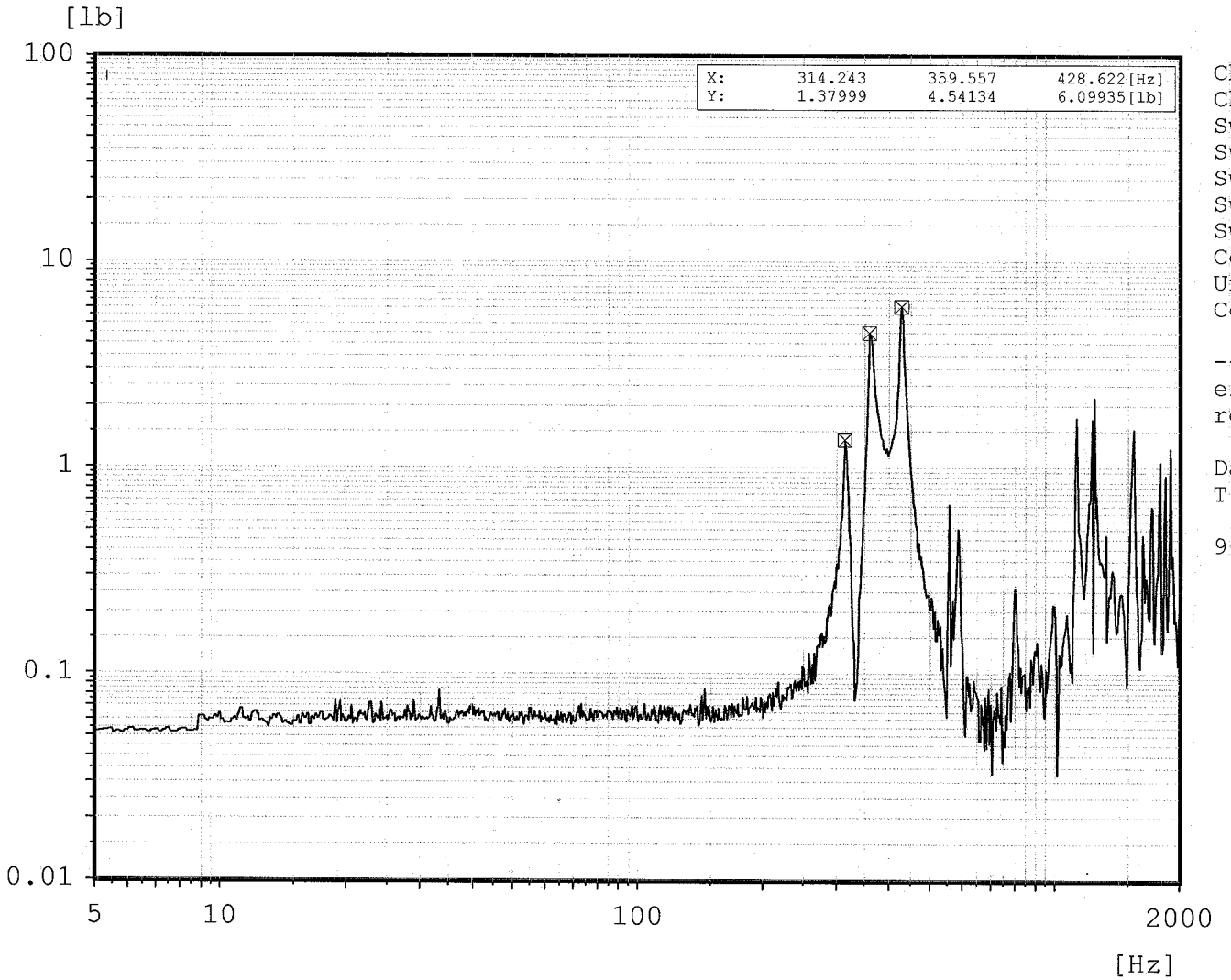

Chan.no: 7
Chan.type: W RMS
Sweep type: logarithmic
Sweeps done: 1
Sweeps req.: 1
Sweep direct.: up
Sweep rate: 4.00 Oct/min
Contr.strat.: Maximum
Unit: lb
Contr.strat.: Closed loop

-- Testing time --
elapsed: 000:02:09
remaining: 000:00:00

Date: 10-29-04
Time: 13:02:57

964#1/Amp #1/ M+P #2

C:\VcpNT\Daten\m+p\SPIRE\BDA\101605 run 3 xax.rsn

Random

101605, Run 7, X axis

SPIRE BDA

P/N 10209800, S/N : 013

Control channel

0dB, Cold

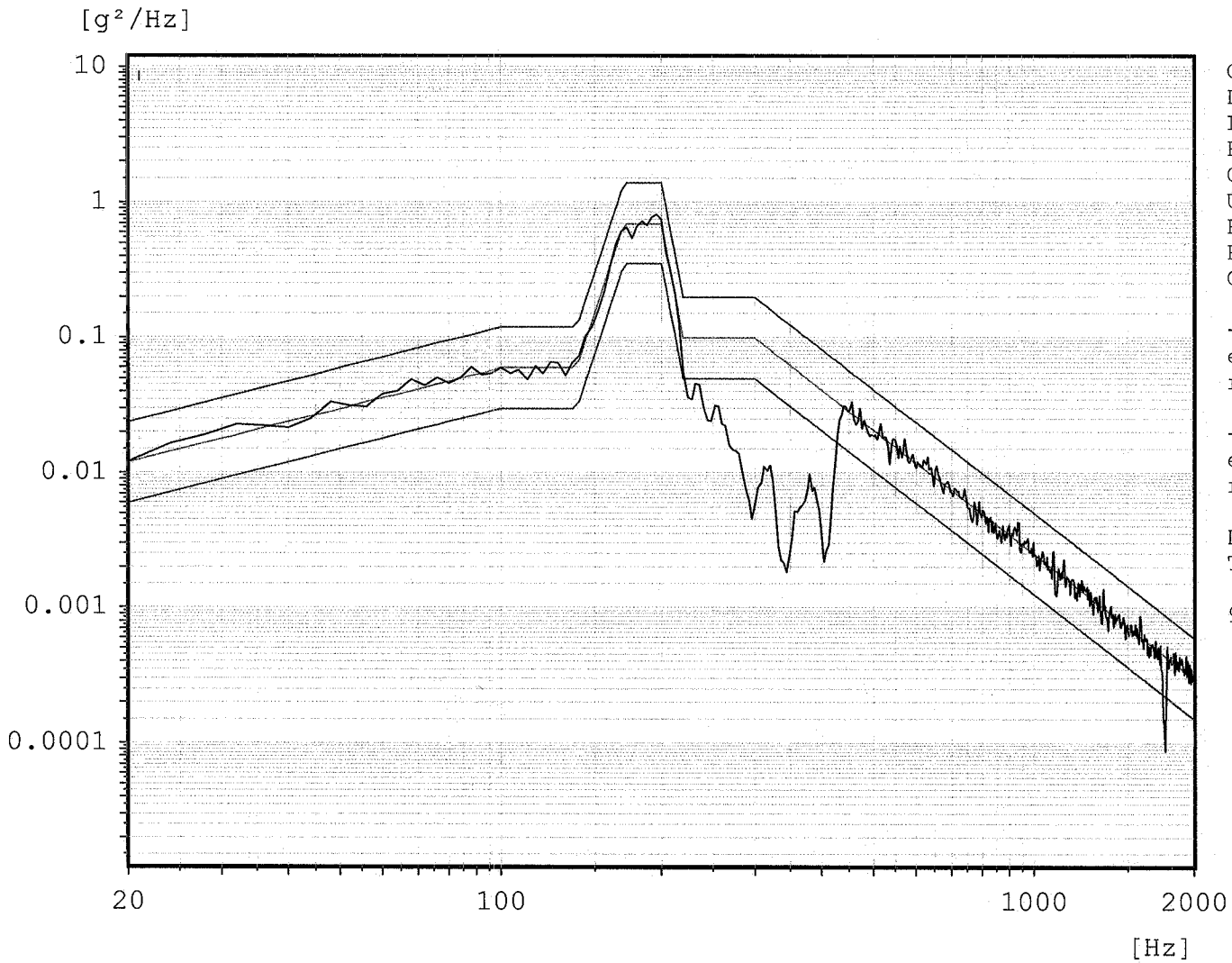

Chan.type:	X
DOF:	180
Level:	0.0 dB
Resolution:	4 Hz
Contr.strat.:	Maximum
Unit:	g²/Hz
RMS (act.):	7.074 g
RMS (req.):	7.945 g
Contr.strat.:	Closed loop

-- Time on act. level --

elapsed:	000:02:00
remaining:	000:00:00

-- Time total --

elapsed:	000:03:33
remaining:	000:00:00

Date:	10-29-04
Time:	13:58:02

964#1/ Amp#1/ M+P#2

C:\VcpNT\Daten\m+p\SPIRE\BDA\101605 run 7 xax.rrn

Random

101605, Run 7, X axis

SPIRE BDA

P/N 10209800, S/N : 013

Force Sum X

0dB, Cold

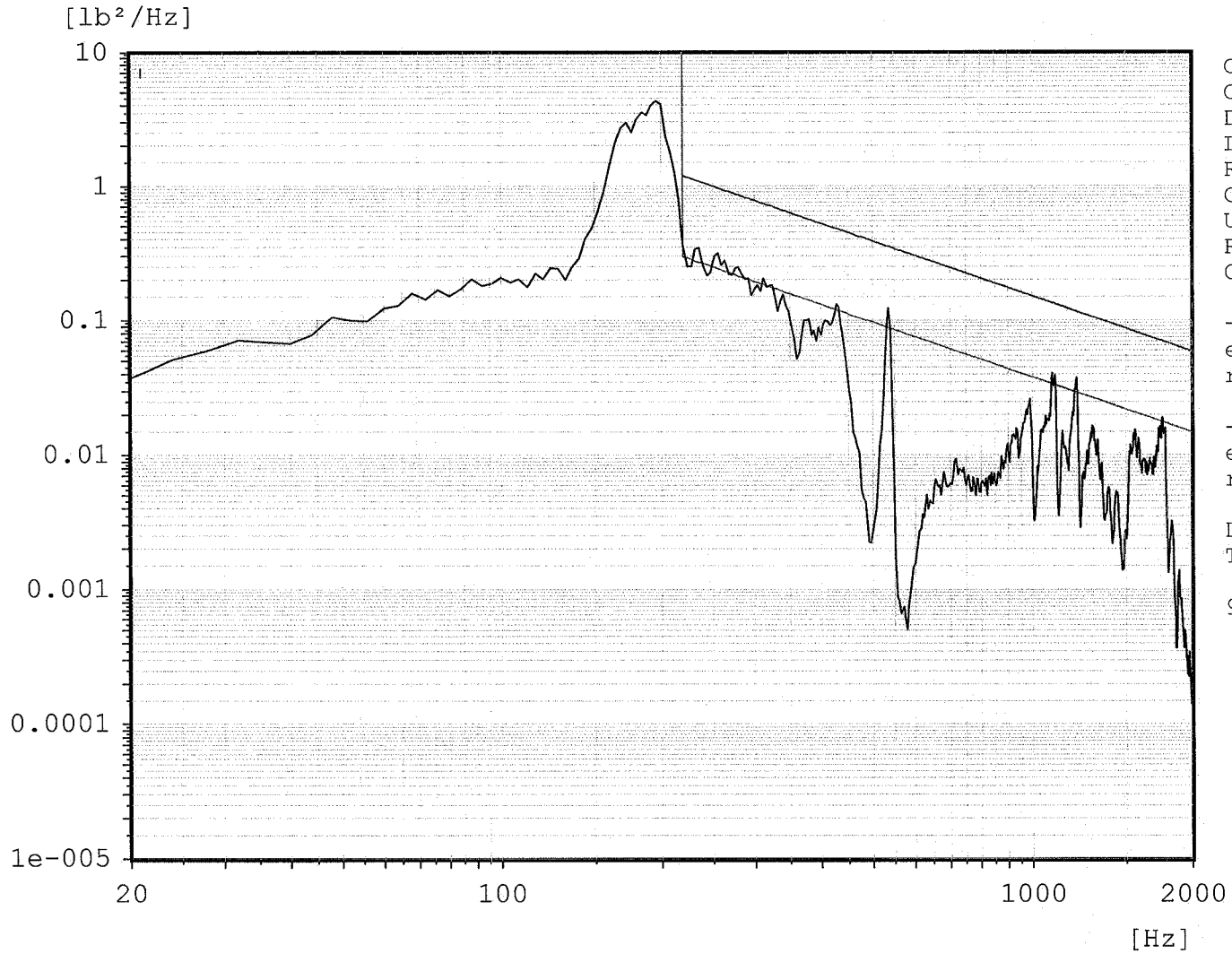

Chan.no:	6
Chan.type:	W
DOF:	90
Level:	0.0 dB
Resolution:	4 Hz
Contr.strat.:	Maximum
Unit:	lb²/Hz
RMS (act.):	15.64 lb
Contr.strat.:	Closed loop

-- Time on act. level --

elapsed:	000:02:00
remaining:	000:00:00

-- Time total --

elapsed:	000:03:33
remaining:	000:00:00

Date:	10-29-04
Time:	13:58:02

964#1/ Amp#1/ M+P#2

C:\VcpNT\Daten\m+p\SPIRE\BDA\101605 run 7 xax.rrn

Random

101605, Run 7, X axis

SPIRE BDA

P/N 10209800, S/N : 013

Force Sum Y

0dB, Cold

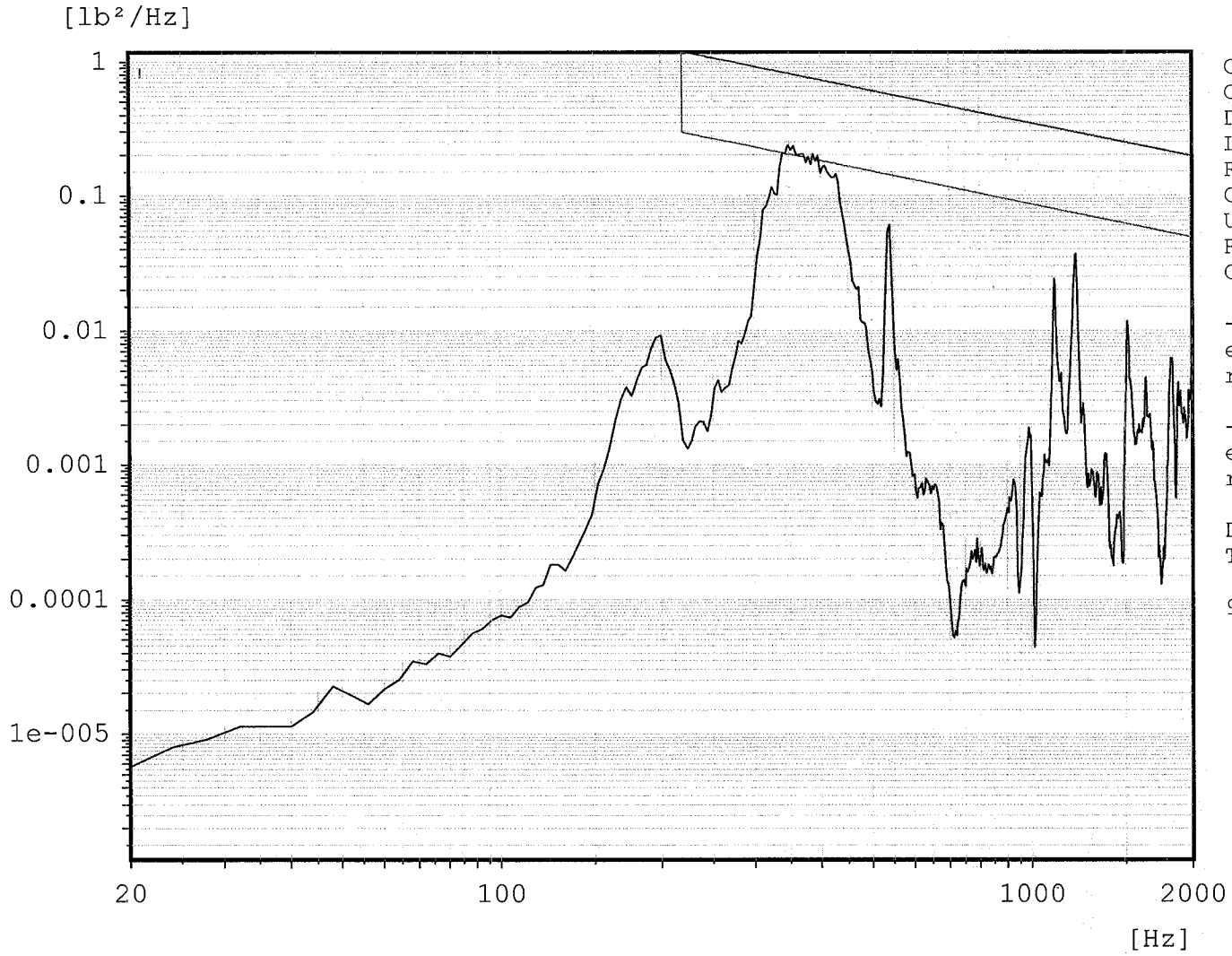

Chan.no:	7
Chan.type:	W
DOF:	90
Level:	0.0 dB
Resolution:	4 Hz
Contr.strat.:	Maximum
Unit:	lb²/Hz
RMS (act.):	5.288 lb
Contr.strat.:	Closed loop

-- Time on act. level --

elapsed:	000:02:00
remaining:	000:00:00

-- Time total --

elapsed:	000:03:33
remaining:	000:00:00

Date:	10-29-04
Time:	13:58:02

964#1/ Amp#1/ M+P#2

C:\VcpNT\Daten\m+p\SPIRE\BDA\101605 run 7 xax.rrn

Random

101605, Run 7, X axis

SPIRE BDA

P/N 10209800, S/N : 013

Force Sum Z

0dB, Cold

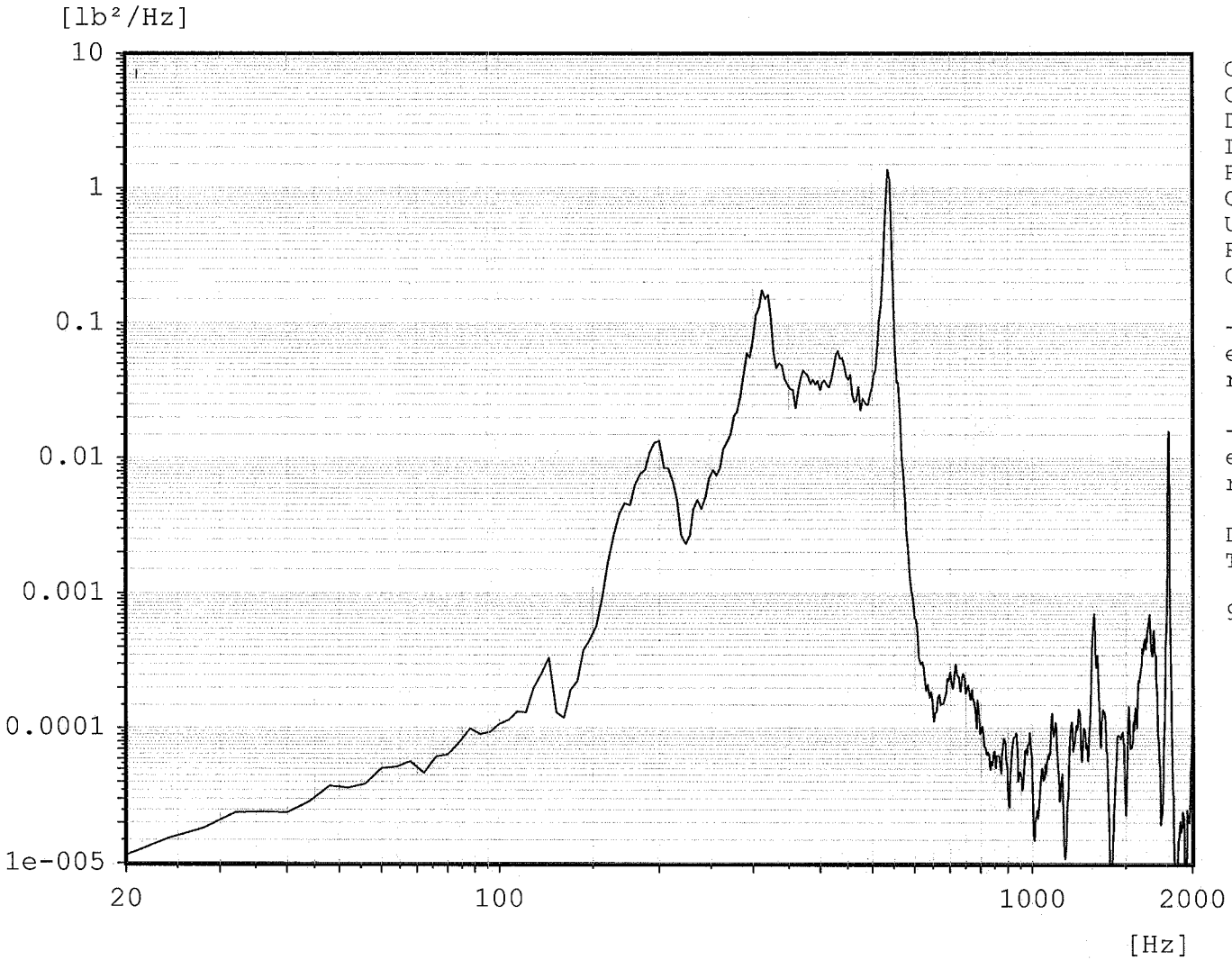

Chan.no:	8
Chan.type:	W
DOF:	90
Level:	0.0 dB
Resolution:	4 Hz
Contr.strat.:	Maximum
Unit:	lb²/Hz
RMS (act.):	5.872 lb
Contr.strat.:	Closed loop

-- Time on act. level --

elapsed:	000:02:00
remaining:	000:00:00

-- Time total --

elapsed:	000:03:33
remaining:	000:00:00

Date:	10-29-04
Time:	13:58:02

964#1/ Amp#1/ M+P#2

C:\VcpNT\Daten\m+p\SPIRE\BDA\101605 run 7 xax.rrn

Sine

101605, Run 9, X axis

Spire BDA

P/N 10209800-, S/N : 013

Force Sum X

After Shake, Cold

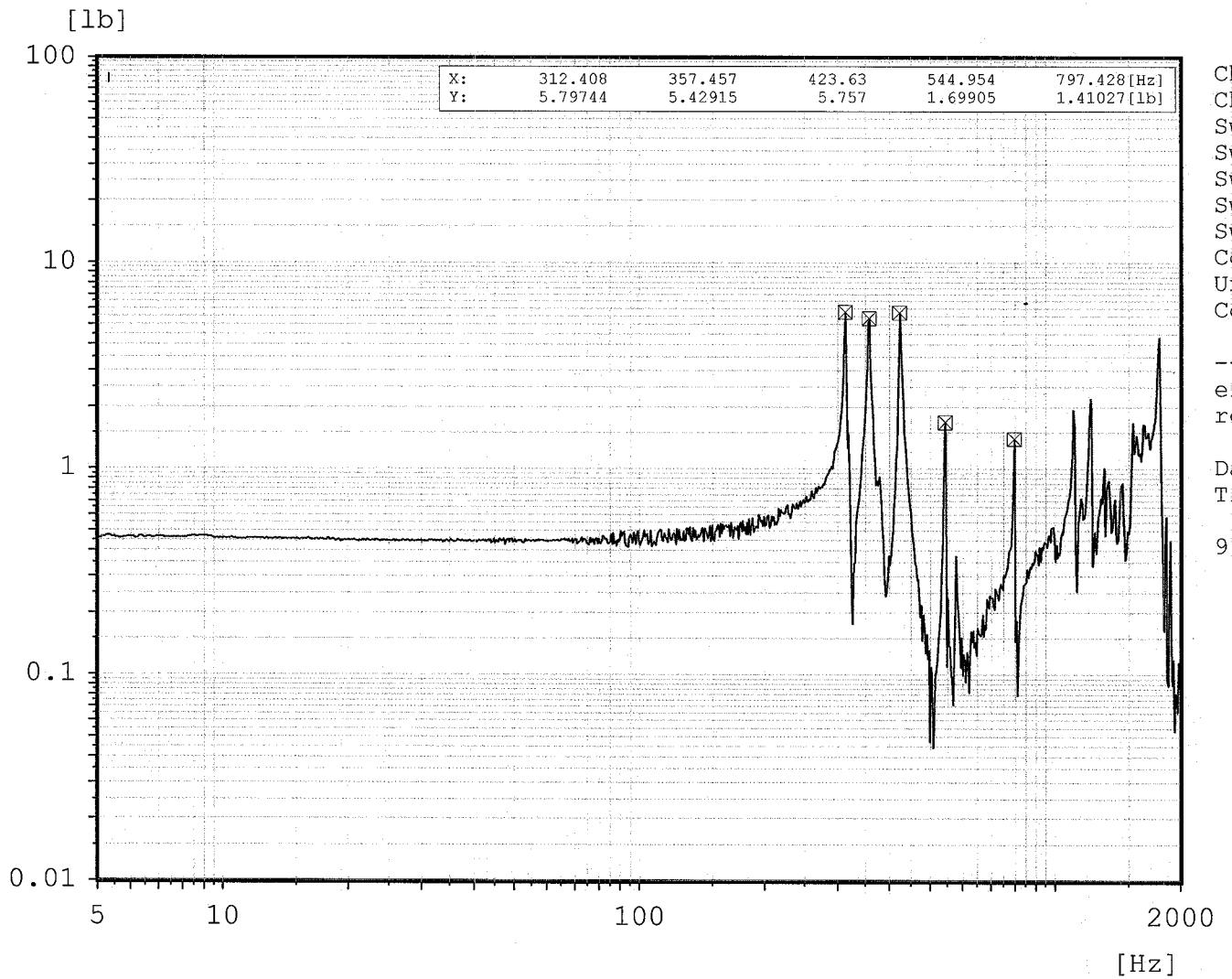

Chan.no: 6
Chan.type: W RMS
Sweep type: logarithmic
Sweeps done: 1
Sweeps req.: 1
Sweep direct.: up
Sweep rate: 4.00 Oct/min
Contr.strat.: Maximum
Unit: lb
Contr.strat.: Closed loop

-- Testing time --
elapsed: 000:02:09
remaining: 000:00:00

Date: 10-29-04
Time: 14:08:48

964#1/Amp #1/ M+P #2

C:\VcpNT\Daten\m+p\SPIRE\BDA\101605 run 9 xax.rsn

Sine

101605, Run 9, X axis

Spire BDA

P/N 10209800-, S/N : 013

Force Sum Y

After Shake, Cold

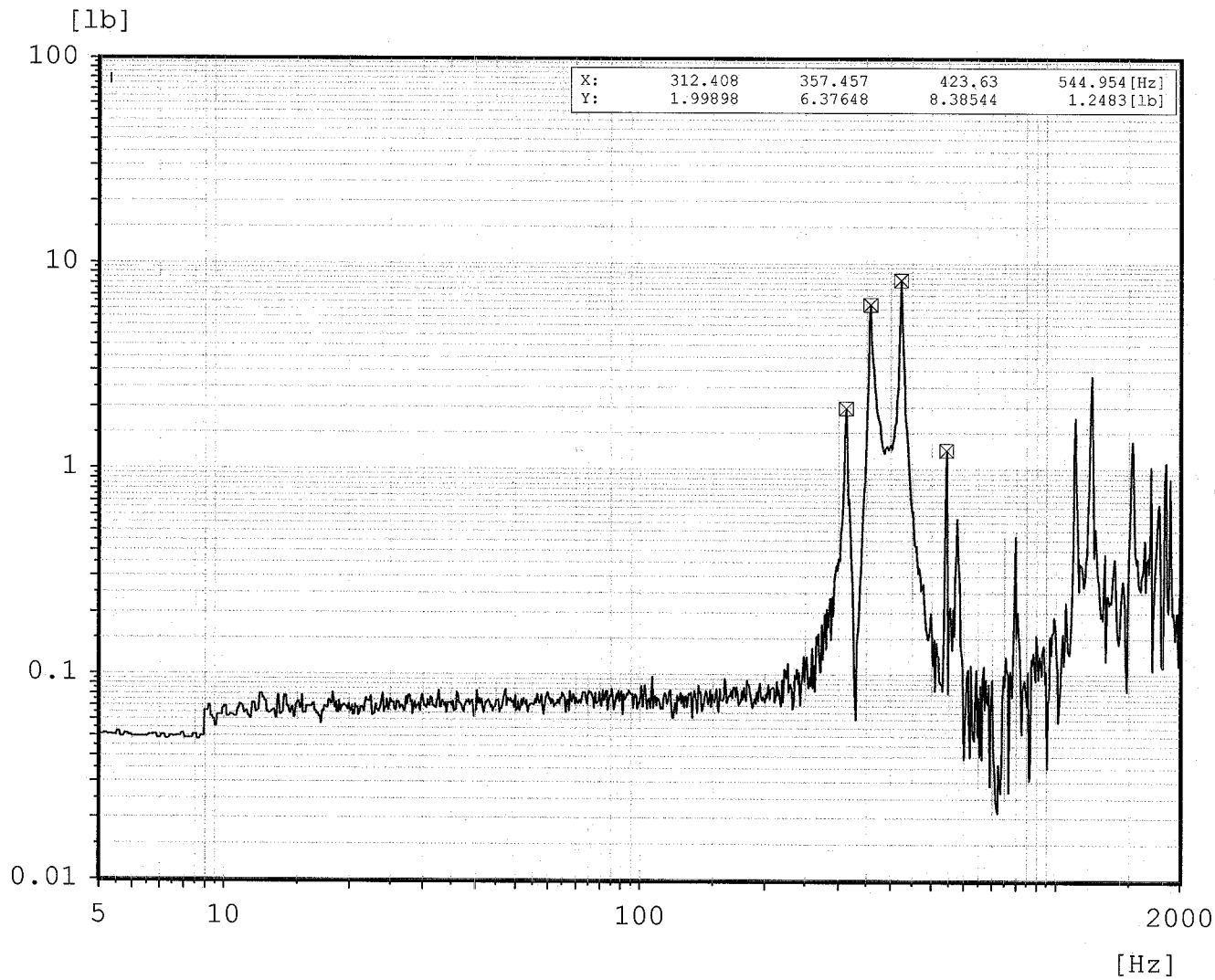

Chan.no: 7
Chan.type: W RMS
Sweep type: logarithmic
Sweeps done: 1
Sweeps req.: 1
Sweep direct.: up
Sweep rate: 4.00 Oct/min
Contr.strat.: Maximum
Unit: lb
Contr.strat.: Closed loop

-- Testing time --
elapsed: 000:02:09
remaining: 000:00:00

Date: 10-29-04
Time: 14:08:48

964#1/Amp #1/ M+P #2

C:\VcpNT\Daten\m+p\SPIRE\BDA\101605 run 9 xax.rsn

PRELIMINARY

2/18/2005

PERFORMANCE VERIFICATION MATRIX - PFM PSW BDA - S/N 10209800-3-013

BDA Performance

Item	D. Value	Min Perf	Measured Median	Unit	Reference	Note
Number of bad optical pixels	= 9	= 22	2		BDA-PER-01	see next spreadsheet
(NEPphoton/NEPtotal)^2 (derived)	> 0.63	> 0.53	0.56		BDA-PER-02	at 32.0 mVrms bias
Optical efficiency*	> 0.85	> 0.65	0.71		BDA-PER-03	
Detector time constant	< 13	< 32	5.2	ms	BDA-PER-06	at 20 mV bias
Vmax***	< 11***		5.3	mV	BDA-DRCU-22	
Calibration uniformity**	> 0.99	> 0.99	N/M		BDA-PER-08	
Cross-talk (n-n)**	< 0.01	< 0.05	N/M		BDA-PER-09	
Cross-talk (non n-n)**	< 0.001	< 0.001	N/M		BDA-PER-09	
1/f knee frequency	< 30	< 100	< 30	mHz	BDA-PER-10	at 21.2 mVrms bias
Average conducted heat load from 1.7 K	< 8	< 15	< 3.9	uW	BDA-TEC-06	

BDA Design Values (at 300 mK)

Item	Target	Measured Median	Unit	Reference	Note
R0	180.0	88.1	Ohms	BDA-SSSD	
Delta	41.8	41.6	K	BDA-SSSD	
R300	24.0	11.5	MOhms	BDA-SSSD	
G300	53.0	63.7	pW/K	BDA-SSSD	
Beta	1.50	1.56		BDA-SSSD	
C300	1.00	0.52	pJ/K	BDA-SSSD	
Rlr	10.0	8.2	MOhms	BDA-SSSD	room temp
Dark Sdc	5.9	4.1	e8 V/W	BDA-SSSD	at 21.2 mVrms bias
Dark NEP (1 Hz), incl 10 nV/rtHz amp. noise	3.5	4.8	e-17 W/rtHz	derived	at 21.2 mVrms bias
Dark NEP (0.1 Hz), incl 10 nV/rtHz amp. noise	3.5	6.9	e-17 W/rtHz	derived	at 21.2 mVrms bias
Vmax	10.3	4.4	mVrms	BDA-SSSD	SSSD value in error
BDA temperature rise from 1.7 K	< 10	9.8	mK	BDA-HCO-1	
BDA thermal time constant	~ 100	98	s	BDA-HCO-2	

*assumes νlower = 1.02 νcutoff

**not tested

***Thermistor values are not included

	Problem Channels					
			Pixel functional at			
	Pixel	**Diagnosis**	**300 K**	**4 K**	**0.3 K**	**Notes**
	C12	BDA dead	No	No	No	pixel dead in fabrication
	J7	BDA dead	No	No	No	pixel dead in fabrication
	G11	open load resistor	TBD	N/M	Yes	logged to have open load resistor
	H16	BoDAC dead	Yes	Yes	N/M	Dead BoDAC JFET
	E9	BoDAC dead	Yes	N/M	N/M	Dead BoDAC JFET
	G9	BoDAC dead	Yes	Yes	N/M	Dead BoDAC JFET
	F1	BoDAC LIA dead	Yes	Yes	Yes	no noise data available
	F14	BoDAC LIA dead	Yes	Yes	Yes	no noise data available
	G2	BoDAC Very Noisy	Yes	Yes	Yes	TBD
	G6	BoDAC Noisy	Yes	Yes	Yes	microphonic cable
	F7	BoDAC Noisy	Yes	Yes	Yes	microphonic cable
	G7	BoDAC Noisy	Yes	Yes	Yes	microphonic cable
	F8	BoDAC Noisy	Yes	Yes	Yes	microphonic cable
	B5	BoDAC Moderately Noisy	Yes	Yes	Yes	microphonic cable
	A2	BoDAC Moderately Noisy	Yes	Yes	Yes	microphonic cable
	F12	BoDAC Moderately Noisy	Yes	Yes	Yes	microphonic cable
	F16	BoDAC Moderately Noisy	Yes	Yes	Yes	microphonic cable
	H7	BoDAC Moderately Noisy	Yes	Yes	Yes	microphonic cable
	H8	BoDAC Moderately Noisy	Yes	Yes	Yes	microphonic cable
	G8	BoDAC Moderately Noisy	Yes	Yes	Yes	microphonic cable

PRELIMINARY

Pixel Performance

Item	DV	MP								
BDA connector			J01	J01	J01	J01	J01	J01	J01	J01
BDA pins			1,26	2,27	3,28	4,29	5,30	6,31	7,32	8,33
BoDAC Connector			4	4	4	4	4	4	4	4
Channel ID			**1**	**2**	**3**	**4**	**5**	**6**	**7**	**8**
Detector ID			D6	B6	C5	A5	E5	B5	D5	C4
BDA Pixel Operability			Yes	Yes	Yes	Yes	Yes	Yes	Yes	Yes
BoDAC channel Operability	N/A	N/A	Yes	Yes	Yes	Yes	Yes	Yes	Yes	Yes
Noisy BoDAC channel	N/A	N/A	No	No	No	No	No	M. Noisy	No	No
(NEPphoton/NEPtotal)^2 (derived)	> 0.63	> 0.53	0.57	0.53	0.54	0.56	0.57	0.60	0.56	0.53
Optical efficiency*	> 0.85	> 0.65	0.63	0.66	0.61	0.72	0.71	0.75	0.66	0.65
Detector time constant	< 13	< 32	5.0	5.4	5.6	5.1	6.0	11.6	5.0	5.4
Calibration uniformity**	> 0.99	> 0.99	N/A	N/A	N/A	N/A	N/A	N/A	N/A	N/A
Cross-talk (n-n)**	< 0.01	< 0.05	N/A	N/A	N/A	N/A	N/A	N/A	N/A	N/A
Cross-talk (non n-n)**	< 0.001	< 0.001	N/A	N/A	N/A	N/A	N/A	N/A	N/A	N/A
1/f knee frequency***	< 30	< 100	27	55	27	27	27	64	46	27

Pixel Design Values

Item	Target								
R0	180.0	97.0	78.6	79.4	84.3	84.7	90.5	84.8	77.4
Delta	41.8	40.85	41.19	41.24	41.75	41.92	43.18	41.67	40.90
G300	53	65.8	64.1	64.1	63.7	64.3	60.6	64.1	67.1
Beta	1.5	1.56	1.57	1.56	1.56	1.56	1.61	1.57	1.52
C300	1.00	0.51	0.54	0.56	0.51	0.61	1.12	0.51	0.56
Gamma	1 (fixed)	1.0	1.0	1.0	1.0	1.0	1.0	1.0	1.0
R300	24.1	11.3	9.6	9.8	11.2	11.5	14.7	11.1	9.1
Rlr+	10.00	8.21	8.24	8.19	8.16	8.24	8.16	8.19	8.24
Rlr-	10.00	8.15	8.19	8.12	8.16	8.12	8.08	8.16	8.12
Dark Sdc	5.9	4.1	3.9	3.9	4.1	4.1	4.4	4.1	3.8
Dark NEP (1 Hz)****, incl 10 nV/rtHz amp. noise	3.5	4.70	4.70	4.59	4.75	4.81	6.85	4.50	4.77
Dark NEP (0.1 Hz)****, incl 10 nV/rtHz amp. noise	3.5	7.49	7.00	6.60	6.84	7.19	20.58	6.71	7.02
Dark NEP (0.1 Hz)***, incl 10 nV/rtHz amp. noise	3.5	6.53	6.49	5.96	6.64	6.34	7.49	6.76	6.68
Vmax	10.3	4.47	4.06	4.09	4.33	4.41	4.80	4.34	4.03

*assumes νlower = 1.02 νcutoff

**not tested

***from TC data set

****from non-TC data set

PRELIMINARY

Pixel Performance											
Item											
BDA connector	J01	J01	J01	J01	J01	J01	J01	J01	J01	J01	J01
BDA pins	9,34	10,35	11,36	12,37	13,38	14,39	15,40	16,41	17,42	18,43	19,44
BoDAC Connector	4	4	4	4	4	4	4	4	4	4	4
Channel ID	**9**	**10**	**11**	**12**	**13**	**14**	**15**	**16**	**17**	**18**	**19**
Detector ID	A4	D4	B4	C3	B3	A3	A2	D3	C2	B2	D2
BDA Pixel Operability	Yes	Yes	Yes	Yes	Yes	Yes	Yes	Yes	Yes	Yes	Yes
BoDAC channel Operability	Yes	Yes	Yes	Yes	Yes	Yes	Yes	Yes	Yes	Yes	Yes
Noisy BoDAC channel	No	No	No	No	No	No	M. Noisy	No	No	No	No
(NEPphoton/NEPtotal)^2 (derived)	0.59	0.53	0.57	0.63	0.56	0.56	0.55	0.55	0.56	0.56	0.60
Optical efficiency*	0.76	0.68	0.63	0.62	0.62	0.70	0.74	0.71	0.65	0.63	0.72
Detector time constant	5.7	5.6	5.1	4.4	6.4	6.4	5.7	5.3	5.4	5.2	6.2
Calibration uniformity**	N/A	N/A	N/A	N/A	N/A	N/A	N/A	N/A	N/A	N/A	N/A
Cross-talk (n-n)**	N/A	N/A	N/A	N/A	N/A	N/A	N/A	N/A	N/A	N/A	N/A
Cross-talk (non n-n)**	N/A	N/A	N/A	N/A	N/A	N/A	N/A	N/A	N/A	N/A	N/A
1/f knee frequency***	55	46	37	37	46	37	27	37	37	37	27
Pixel Design Values											
Item											
R0	100.5	80.0	104.0	135.3	88.0	87.7	77.4	85.9	108.2	106.8	107.7
Delta	41.22	41.01	40.19	40.94	41.34	41.28	41.97	41.09	41.43	41.58	42.83
G300	66.4	64.2	66.0	66.2	63.7	65.1	63.6	65.0	50.4	50.2	51.4
Beta	1.54	1.51	1.51	1.51	1.56	1.56	1.56	1.54	1.55	1.57	1.54
C300	0.59	0.56	0.52	0.44	0.64	0.65	0.57	0.54	0.45	0.44	0.52
Gamma	1.0	1.0	1.0	1.0	1.0	1.0	1.0	1.0	1.0	1.0	1.0
R300	12.4	9.6	11.1	16.0	11.0	10.9	10.6	10.4	13.7	13.8	16.6
Rlr+	8.2	8.24	8.24	8.18	8.19	8.2	8.21	8.22	8.24	8.22	8.23
Rlr-	8.12	8.16	8.12	8.12	8.16	8.12	8.15	8.16	8.11	8.12	8.16
Dark Sdc	4.2	3.9	4.0	4.5	4.1	4.0	4.0	4.0	4.4	4.4	4.7
Dark NEP (1 Hz)****, incl 10 nV/rtHz amp. noise	4.59	4.67	4.79	4.56	4.78	4.87	6.57	4.95	4.41	4.29	4.05
Dark NEP (0.1 Hz)****, incl 10 nV/rtHz amp. noise	6.80	7.56	6.57	6.72	7.07	6.88	8.43	6.48	6.05	6.14	5.97
Dark NEP (0.1 Hz)***, incl 10 nV/rtHz amp. noise	6.83	7.10	6.79	6.99	7.49	6.88	9.03	6.58	6.08	5.82	5.76
Vmax	4.67	4.03	4.43	5.30	4.32	4.34	4.20	4.23	4.28	4.28	4.69
*assumes νlower = 1.02 νcutoff											
**not tested											
***from TC data set											
****from non-TC data set											

PRELIMINARY

Pixel Performance

Item											
BDA connector	J01	J01	J01	J01	J01	J02	J02	J02	J02	J02	J02
BDA pins	20,45	21,46	22,47	23,48	24,49	1,26	2,27	3,28	4,29	5,30	6,31
BoDAC Connector	4	4	4	4	4	1	1	1	1	1	1
Channel ID	**20**	**21**	**22**	**23**	**24**	**1**	**2**	**3**	**4**	**5**	**6**
Detector ID	A1	C1	B1	DK1	D1	F12	J11	E12	H12	G12	F13
BDA Pixel Operability	Yes	Yes	Yes	Yes	Yes	Yes	Yes	Yes	Yes	Yes	Yes
BoDAC channel Operability	Yes	Yes	Yes	Yes	Yes	Yes	Yes	Yes	Yes	Yes	Yes
Noisy BoDAC channel	No	No	No	No	No	M. Noisy	No	No	No	No	No
(NEPphoton/NEPtotal)^2 (derived)	0.59	0.56	0.56	0.57	0.57	0.55	0.54	0.57	0.55	0.53	0.57
Optical efficiency*	0.81	0.72	0.79	1.43	0.87	0.67	0.71	0.67	0.74	0.74	0.68
Detector time constant	5.7	5.3	6.2	13.2	6.5	6.4	5.0	5.1	4.9	5.1	4.8
Calibration uniformity**	N/A	N/A	N/A	N/A	N/A	N/A	N/A	N/A	N/A	N/A	N/A
Cross-talk (n-n)**	N/A	N/A	N/A	N/A	N/A	N/A	N/A	N/A	N/A	N/A	N/A
Cross-talk (non n-n)**	N/A	N/A	N/A	N/A	N/A	N/A	N/A	N/A	N/A	N/A	N/A
1/f knee frequency***	37	37	27	27	18	< 18	18	18	18	18	18

Pixel Design Values

Item											
R0	118.3	101.6	112.2	111.4	114.1	88.4	78.0	81.1	81.4	79.2	78.4
Delta	41.63	41.86	41.05	41.46	41.43	40.75	41.37	42.24	41.47	40.95	42.19
G300	51.6	50.7	51.2	51.7	51.8	64.4	66.0	64.5	65.7	66.5	69.2
Beta	1.48	1.56	1.53	1.52	1.54	1.56	1.56	1.60	1.55	1.55	1.55
C300	0.48	0.45	0.52	1.12	0.55	0.65	0.51	0.52	0.50	0.53	0.51
Gamma	1.0	1.0	1.0	1.0	1.0	1.0	1.0	1.0	1.0	1.0	1.0
R300	15.4	13.7	13.5	14.2	14.5	10.2	9.8	11.6	10.4	9.4	11.1
Rlr+	8.28	8.26	8.24	8.28	8.28	8.08	8.08	8.11	8.08	8.04	8.08
Rlr-	8.15	8.16	8.2	8.2	8.2	8	8.08	8	8.01	8.08	8.04
Dark Sdc	4.6	4.5	4.4	4.5	4.5	3.9	3.9	4.1	3.9	3.8	4.0
Dark NEP (1 Hz)****, incl 10 nV/rtHz amp. noise	5.17	4.24	6.07	5.40	4.38	5.92	4.81	4.51	4.67	4.82	5.43
Dark NEP (0.1 Hz)****, incl 10 nV/rtHz amp. noise	8.55	7.09	8.40	9.60	6.84	11.54	7.05	6.23	6.24	6.86	6.99
Dark NEP (0.1 Hz)***, incl 10 nV/rtHz amp. noise	7.45	6.15	7.83	7.75	6.02	8.07	6.67	5.62	6.16	6.23	6.41
Vmax	4.56	4.27	4.28	4.39	4.45	4.19	4.14	4.42	4.25	4.08	4.47

*assumes νlower = 1.02 νcutoff

**not tested

***from TC data set

****from non-TC data set

PRELIMINARY

Pixel Performance											
Item											
BDA connector	J02	J02	J02	J02	J02	J02	J02	J02	J02	J02	J02
BDA pins	7,32	8,33	9,34	10,35	11,36	12,37	13,38	14,39	15,40	16,41	17,42
BoDAC Connector	1	1	1	1	1	1	1	1	1	1	1
Channel ID	**7**	**8**	**9**	**10**	**11**	**12**	**13**	**14**	**15**	**16**	**17**
Detector ID	E13	J12	H13	G13	F14	E14	J13	H14	G14	J14	F15
BDA Pixel Operability	Yes	Yes	Yes	Yes	Yes	Yes	Yes	Yes	Yes	Yes	Yes
BoDAC channel Operability	Yes	Yes	Yes	Yes	Yes	Yes	Yes	Yes	Yes	Yes	Yes
Noisy BoDAC channel	No	No	No	No	Dead LIA	No	No	No	No	No	No
(NEPphoton/NEPtotal)^2 (derived)	0.57	0.57	0.58	0.56	0.57	0.58	0.55	0.54	0.56	0.57	0.57
Optical efficiency*	0.65	0.73	0.78	0.69	0.71	0.68	0.67	0.71	0.69	0.69	0.69
Detector time constant	4.5	4.3	4.6	4.5	4.6	5.3	5.8	5.3	4.8	5.2	4.8
Calibration uniformity**	N/A	N/A	N/A	N/A	N/A	N/A	N/A	N/A	N/A	N/A	N/A
Cross-talk (n-n)**	N/A	N/A	N/A	N/A	N/A	N/A	N/A	N/A	N/A	N/A	N/A
Cross-talk (non n-n)**	N/A	N/A	N/A	N/A	N/A	N/A	N/A	N/A	N/A	N/A	N/A
1/f knee frequency***	18	18	18	18	18	< 18	18	18	18	18	18
Pixel Design Values											
Item											
R0	95.0	94.8	81.7	83.2	89.4	85.7	75.6	83.8	81.5	85.1	87.9
Delta	41.34	41.04	42.39	41.67	41.76	42.39	41.96	40.87	41.82	42.12	41.55
G300	63.7	65.7	68.0	66.7	65.1	63.6	66.2	66.9	66.4	64.7	64.9
Beta	1.57	1.54	1.55	1.57	1.57	1.55	1.55	1.54	1.56	1.55	1.58
C300	0.45	0.44	0.48	0.46	0.47	0.53	0.60	0.55	0.49	0.53	0.49
Gamma	1.0	1.0	1.0	1.0	1.0	1.0	1.0	1.0	1.0	1.0	1.0
R300	11.9	11.4	11.9	10.9	11.9	12.5	10.3	9.8	10.9	11.9	11.4
Rlr+	8.08	8.08	8.02	8.08	8.08	8.08	8.13	8.08	8.12	8.12	8.08
Rlr-	8.04	8.12	8.04	8.09	8.05	8.16	8.08	8.08	8.16	8.08	8.08
Dark Sdc	4.1	4.1	4.1	4.0	4.1	4.2	4.0	3.9	4.0	4.1	4.1
Dark NEP (1 Hz)****, incl 10 nV/rtHz amp. noise	4.82	5.13	4.80	4.83	N/M	5.95	4.80	4.62	4.60	4.33	4.66
Dark NEP (0.1 Hz)****, incl 10 nV/rtHz amp. noise	6.47	7.08	6.03	6.38	N/M	7.04	7.20	6.64	6.49	6.51	6.12
Dark NEP (0.1 Hz)***, incl 10 nV/rtHz amp. noise	6.23	6.64	6.08	6.35	N/M	6.16	6.16	5.53	5.77	6.15	6.05
Vmax	4.49	4.46	4.58	4.39	4.52	4.54	4.24	4.18	4.37	4.49	4.42
*assumes νlower = 1.02 νcutoff											
**not tested											
***from TC data set											
****from non-TC data set											

PRELIMINARY

Pixel Performance

Item											
BDA connector	J02	J02	J02	J02	J02	J02	J02	J03	J03	J03	J03
BDA pins	18,43	19,44	20,45	21,46	22,47	23,48	24,49	1,26	2,27	3,28	4,29
BoDAC Connector	1	1	1	1	1	1	1	5	5	5	5
Channel ID	**18**	**19**	**20**	**21**	**22**	**23**	**24**	**1**	**2**	**3**	**4**
Detector ID	H15	J15	G15	H16	DK2	F16	E15	R1	D16	T1	B16
BDA Pixel Operability	Yes	Yes	Yes	Yes	Yes	Yes	Yes	Yes	Yes	Yes	Yes
BoDAC channel Operability	Yes	Yes	Yes	No	Yes	Yes	Yes	Yes	Yes	Yes	Yes
Noisy BoDAC channel	No	No	No	No	No	M. Noisy	No	No	No	No	No
(NEPphoton/NEPtotal)^2 (derived)	0.56	0.55	0.56	N/A	0.56	0.56	0.55	N/A	0.56	N/A	0.56
Optical efficiency*	0.69	0.75	0.84	N/A	0.51	0.70	0.61	N/A	0.69	N/A	0.72
Detector time constant	5.3	4.7	4.5	0.5	5.0	4.9	5.2	0.0	4.5	3.2	5.2
Calibration uniformity**	N/A	N/A	N/A	N/A	N/A	N/A	N/A	N/A	N/A	N/A	N/A
Cross-talk (n-n)**	N/A	N/A	N/A	N/A	N/A	N/A	N/A	N/A	N/A	N/A	N/A
Cross-talk (non n-n)**	N/A	N/A	N/A	N/A	N/A	N/A	N/A	N/A	N/A	N/A	N/A
1/f knee frequency***	18	18	18	< 18	18	73	18	< 18	18	< 18	27

Pixel Design Values

Item											
R0	82.3	77.1	88.7	N/M	85.7	86.6	82.0	5.05E+06	92.1	148.6	81.3
Delta	41.84	41.76	41.48	N/M	41.59	41.62	41.74	0.00	41.30	41.74	41.77
G300	65.6	64.3	64.0	N/M	62.5	62.3	63.2	N/A	62.6	N/A	63.8
Beta	1.56	1.55	1.57	N/M	1.56	1.58	1.56	N/A	1.53	N/A	1.57
C300	0.54	0.47	0.45	N/M	0.49	0.48	0.52	N/M	0.44	0.10	0.52
Gamma	1.0	1.0	1.0	1.0	1.0	1.0	1.0	1.0	1.0	1.0	1.0
R300	11.1	10.3	11.3	N/M	11.1	11.3	10.9	5.05E+06	11.5	19.7	10.8
Rlr+	8.12	8.09	8.08	8.12	8.11	8.08	8.04	8.35	8.36	8.4	8.36
Rlr-	8.08	8.08	8.04	8.04	8.15	8.07	8.04	8.36	8.29	8.32	8.32
Dark Sdc	4.0	4.0	4.1	N/M	4.1	4.1	4.0	N/M	4.2	N/A	4.1
Dark NEP (1 Hz)****, incl 10 nV/rtHz amp. noise	4.61	5.08	4.68	N/M	4.96	4.84	4.93	N/M	4.99	N/A	4.96
Dark NEP (0.1 Hz)****, incl 10 nV/rtHz amp. noise	6.27	6.72	6.26	N/M	6.52	8.15	6.00	N/M	6.58	N/A	6.85
Dark NEP (0.1 Hz)***, incl 10 nV/rtHz amp. noise	6.37	7.10	6.02	N/M	6.18	9.95	5.87	N/M	6.22	N/M	6.41
Vmax	4.37	4.16	4.38	N/M	4.28	4.32	4.25	N/M	4.36	N/M	4.27

*assumes νlower = 1.02 νcutoff

**not tested

***from TC data set

****from non-TC data set

PRELIMINARY

Pixel Performance											
Item											
BDA connector	J03	J03	J03	J03	J03	J03	J03	J03	J03	J03	J03
BDA pins	5,30	6,31	7,32	8,33	9,34	10,35	11,36	12,37	13,38	14,39	15,40
BoDAC Connector	5	5	5	5	5	5	5	5	5	5	5
Channel ID	**5**	**6**	**7**	**8**	**9**	**10**	**11**	**12**	**13**	**14**	**15**
Detector ID	C15	A15	D15	B15	C14	D14	A14	A13	B14	C13	B13
BDA Pixel Operability	Yes	Yes	Yes	Yes	Yes	Yes	Yes	Yes	Yes	Yes	Yes
BoDAC channel Operability	Yes	Yes	Yes	Yes	Yes	Yes	Yes	Yes	Yes	Yes	Yes
Noisy BoDAC channel	No	No	No	No	No	No	No	No	No	No	No
(NEPphoton/NEPtotal)^2 (derived)	0.56	0.56	0.54	0.56	0.56	0.62	0.56	0.55	0.55	0.56	0.56
Optical efficiency*	0.70	0.73	0.62	0.75	0.60	0.68	0.69	0.77	0.71	0.60	0.63
Detector time constant	4.4	5.1	5.1	4.8	5.3	4.0	5.2	360.6	5.9	4.8	5.9
Calibration uniformity**	N/A	N/A	N/A	N/A	N/A	N/A	N/A	N/A	N/A	N/A	N/A
Cross-talk (n-n)**	N/A	N/A	N/A	N/A	N/A	N/A	N/A	N/A	N/A	N/A	N/A
Cross-talk (non n-n)**	N/A	N/A	N/A	N/A	N/A	N/A	N/A	N/A	N/A	N/A	N/A
1/f knee frequency***	18	27	18	27	146	27	27	37	27	27	37
Pixel Design Values											
Item											
R0	83.5	83.0	74.9	84.6	79.3	122.1	87.2	87.1	86.2	86.5	80.4
Delta	41.74	41.82	41.50	41.61	42.08	41.60	41.46	41.29	41.28	41.19	42.04
G300	64.3	65.1	65.6	64.5	65.3	65.9	64.0	62.0	64.4	66.3	64.1
Beta	1.61	1.56	1.57	1.59	1.58	1.56	1.59	1.57	1.57	1.55	1.58
C300	0.45	0.52	0.52	0.49	0.54	0.40	0.52	35.27	0.59	0.50	0.60
Gamma	1.0	1.0	1.0	1.0	1.0	1.0	1.0	1.0	1.0	1.0	1.0
R300	11.1	11.1	9.6	11.0	11.0	15.9	11.1	10.8	10.7	10.6	11.1
Rlr+	8.44	8.32	8.35	8.4	8.28	8.36	8.32	8.32	8.32	8.36	8.29
Rlr-	8.29	8.32	8.32	8.32	8.31	8.28	8.32	8.36	8.36	8.32	8.32
Dark Sdc	4.1	4.1	3.9	4.1	4.1	4.5	4.1	4.1	4.1	4.0	4.1
Dark NEP (1 Hz)****, incl 10 nV/rtHz amp. noise	6.68	5.00	4.68	4.91	5.07	5.93	4.81	4.12	4.85	5.85	4.65
Dark NEP (0.1 Hz)****, incl 10 nV/rtHz amp. noise	8.24	6.56	6.67	10.47	6.37	7.08	6.73	6.14	6.57	7.34	6.45
Dark NEP (0.1 Hz)***, incl 10 nV/rtHz amp. noise	7.48	6.63	6.13	6.62	13.10	6.88	6.32	6.38	6.92	7.07	7.11
Vmax	4.35	4.36	4.09	4.34	4.35	5.26	4.35	4.23	4.28	4.32	4.33
*assumes νlower = 1.02 νcutoff											
**not tested											
***from TC data set											
****from non-TC data set											

PRELIMINARY

Pixel Performance											
Item											
BDA connector	J03	J03	J03	J03	J03	J03	J03	J03	J03	J04	J04
BDA pins	16,41	17,42	18,43	19,44	20,45	21,46	22,47	23,48	24,49	1,26	2,27
BoDAC Connector	5	5	5	5	5	5	5	5	5	2	2
Channel ID	**16**	**17**	**18**	**19**	**20**	**21**	**22**	**23**	**24**	**1**	**2**
Detector ID	D13	A12	C12	D12	B12	E11	A11	C11	B11	E1	F1
BDA Pixel Operability	Yes	Yes	No	Yes	Yes	Yes	Yes	Yes	Yes	Yes	Yes
BoDAC channel Operability	Yes	Yes	Yes	Yes	Yes	Yes	Yes	Yes	Yes	Yes	Yes
Noisy BoDAC channel	No	No	No	No	No	No	No	No	No	No	Dead LIA
(NEPphoton/NEPtotal)^2 (derived)	0.57	0.56	N/A	0.53	0.57	0.56	0.55	0.55	0.53	0.61	0.57
Optical efficiency*	0.68	0.74	N/A	0.77	0.73	0.69	0.74	0.62	0.69	0.72	0.84
Detector time constant	4.9	5.2	2.0	6.3	4.5	5.3	15.8	5.3	5.4	6.0	5.8
Calibration uniformity**	N/A	N/A	N/A	N/A	N/A	N/A	N/A	N/A	N/A	N/A	N/A
Cross-talk (n-n)**	N/A	N/A	N/A	N/A	N/A	N/A	N/A	N/A	N/A	N/A	N/A
Cross-talk (non n-n)**	N/A	N/A	N/A	N/A	N/A	N/A	N/A	N/A	N/A	N/A	N/A
1/f knee frequency***	27	27	< 18	27	27	27	64	27	27	27	< 18
Pixel Design Values											
Item											
R0	92.0	95.8	N/M	79.2	86.9	78.1	83.3	77.1	75.5	130.0	105.5
Delta	41.14	40.97	N/M	40.93	41.61	42.03	41.62	41.91	41.36	42.23	41.69
G300	69.1	62.5	N/M	64.0	67.2	64.4	60.7	63.1	63.6	51.7	51.9
Beta	1.58	1.58	N/M	1.57	1.59	1.58	1.57	1.61	1.59	1.53	1.57
C300	0.52	0.51	N/M	0.64	0.47	0.53	1.53	0.53	0.54	0.50	0.50
Gamma	1.0	1.0	1.0	1.0	1.0	1.0	1.0	1.0	1.0	1.0	1.0
R300	11.2	11.4	N/M	9.4	11.3	10.8	10.9	10.5	9.5	18.5	13.9
Rlr+	8.32	8.32	8.31	8.32	8.27	8.29	8.28	8.32	8.24	8.28	8.28
Rlr-	8.32	8.32	8.32	8.28	8.28	8.28	8.24	8.24	8.23	8.2	8.16
Dark Sdc	4.0	4.1	N/M	3.9	4.1	4.1	4.1	4.0	3.9	4.8	4.5
Dark NEP (1 Hz)****, incl 10 nV/rtHz amp. noise	5.14	4.86	N/M	4.51	4.76	4.30	5.02	5.08	4.94	4.50	N/M
Dark NEP (0.1 Hz)****, incl 10 nV/rtHz amp. noise	6.67	7.50	N/M	6.26	7.44	6.71	10.55	8.20	8.60	5.74	N/M
Dark NEP (0.1 Hz)***, incl 10 nV/rtHz amp. noise	6.99	6.53	N/M	6.10	6.75	5.98	7.65	6.59	6.60	5.74	N/M
Vmax	4.55	4.37	N/M	4.01	4.49	4.27	4.17	4.18	4.01	4.98	4.36
*assumes vlower = 1.02 vcutoff											
**not tested											
***from TC data set											
****from non-TC data set											

PRELIMINARY

Pixel Performance											
Item											
BDA connector	J04	J04	J04	J04	J04	J04	J04	J04	J04	J04	J04
BDA pins	3,28	4,29	5,30	6,31	7,32	8,33	9,34	10,35	11,36	12,37	13,38
BoDAC Connector	2	2	2	2	2	2	2	2	2	2	2
Channel ID	**3**	**4**	**5**	**6**	**7**	**8**	**9**	**10**	**11**	**12**	**13**
Detector ID	T2	H1	G1	J1	H2	F2	J2	G2	H3	J3	E2
BDA Pixel Operability	Yes	Yes	Yes	Yes	Yes	Yes	Yes	Yes	Yes	Yes	Yes
BoDAC channel Operability	Yes	Yes	Yes	Yes	Yes	Yes	Yes	Yes	Yes	Yes	Yes
Noisy BoDAC channel	No	No	No	No	No	No	No	V. Noisy	No	No	No
(NEPphoton/NEPtotal)^2 (derived)	N/A	0.56	0.59	0.57	0.59	0.55	0.57	0.57	0.54	0.56	0.56
Optical efficiency*	N/A	0.87	0.80	0.77	0.74	0.72	0.71	0.81	0.71	0.68	0.74
Detector time constant	3.4	6.4	4.5	7.1	5.5	5.3	5.2	5.4	5.5	5.8	5.2
Calibration uniformity**	N/A	N/A	N/A	N/A	N/A	N/A	N/A	N/A	N/A	N/A	N/A
Cross-talk (n-n)**	N/A	N/A	N/A	N/A	N/A	N/A	N/A	N/A	N/A	N/A	N/A
Cross-talk (non n-n)**	N/A	N/A	N/A	N/A	N/A	N/A	N/A	N/A	N/A	N/A	N/A
1/f knee frequency***	18	18	27	18	27	46	27	< 18	64	27	27
Pixel Design Values											
Item											
R0	158.2	103.0	126.3	103.0	124.2	99.0	96.3	78.1	81.7	90.3	80.8
Delta	41.05	41.62	41.23	41.81	41.42	41.29	40.93	42.44	40.99	41.23	42.09
G300	N/M	52.0	51.4	52.5	52.9	52.1	63.3	65.6	66.7	63.1	63.6
Beta	N/M	1.55	1.56	1.54	1.54	1.54	1.50	1.55	1.50	1.51	1.57
C300	N/M	0.55	0.38	0.62	0.47	0.46	0.51	0.55	0.56	0.58	0.52
Gamma	N/A	1.0	1.0	1.0	1.0	1.0	1.0	1.0	1.0	1.0	1.0
R300	19.0	13.4	15.6	13.8	15.7	12.3	11.4	11.4	9.7	11.1	11.3
Rlr+	8.36	8.24	8.28	8.36	8.32	8.24	8.32	8.23	8.2	8.28	8.19
Rlr-	8.16	8.24	8.24	8.12	8.16	8.16	8.12	8.12	8.12	8.12	8.08
Dark Sdc	N/M	4.4	4.6	4.5	4.6	4.3	4.1	4.1	3.9	4.1	4.1
Dark NEP (1 Hz)****, incl 10 nV/rtHz amp. noise	N/M	4.36	4.24	4.82	4.32	4.79	4.90	13.77	4.80	5.00	4.58
Dark NEP (0.1 Hz)****, incl 10 nV/rtHz amp. noise	N/M	6.46	5.76	6.59	6.26	6.69	6.70	157.39	6.98	7.30	6.78
Dark NEP (0.1 Hz)***, incl 10 nV/rtHz amp. noise	N/M	6.00	6.58	6.88	6.45	7.66	6.53	138.38	8.85	7.17	6.81
Vmax	N/M	4.29	4.61	4.36	4.69	4.12	4.37	4.41	4.14	4.30	4.33
*assumes νlower = 1.02 νcutoff											
**not tested											
***from TC data set											
****from non-TC data set											

PRELIMINARY

Pixel Performance											
Item											
BDA connector	J04	J04	J04	J04	J04	J04	J04	J04	J04	J04	J04
BDA pins	14,39	15,40	16,41	17,42	18,43	19,44	20,45	21,46	22,47	23,48	24,49
BoDAC Connector	2	2	2	2	2	2	2	2	2	2	2
Channel ID	**14**	**15**	**16**	**17**	**18**	**19**	**20**	**21**	**22**	**23**	**24**
Detector ID	F3	G3	H4	J4	E3	F4	G4	H5	E4	J5	F5
BDA Pixel Operability	Yes	Yes	Yes	Yes	Yes	Yes	Yes	Yes	Yes	Yes	Yes
BoDAC channel Operability	Yes	Yes	Yes	Yes	Yes	Yes	Yes	Yes	Yes	Yes	Yes
Noisy BoDAC channel	No	No	No	No	No	No	No	No	No	No	No
(NEPphoton/NEPtotal)^2 (derived)	0.58	0.55	0.58	0.57	0.57	0.59	0.58	0.57	0.57	0.57	0.57
Optical efficiency*	0.75	0.78	0.72	0.68	0.79	0.80	0.75	0.68	0.75	0.70	0.77
Detector time constant	5.6	6.3	5.1	6.3	5.0	6.8	7.1	4.7	4.9	5.8	5.4
Calibration uniformity**	N/A	N/A	N/A	N/A	N/A	N/A	N/A	N/A	N/A	N/A	N/A
Cross-talk (n-n)**	N/A	N/A	N/A	N/A	N/A	N/A	N/A	N/A	N/A	N/A	N/A
Cross-talk (non n-n)**	N/A	N/A	N/A	N/A	N/A	N/A	N/A	N/A	N/A	N/A	N/A
1/f knee frequency***	18	27	46	27	37	46	46	27	27	55	27
Pixel Design Values											
Item											
R0	91.1	85.2	84.3	94.0	91.6	106.9	95.0	91.6	84.2	82.2	87.6
Delta	41.85	41.04	42.05	41.44	41.66	41.24	41.70	41.34	42.11	42.25	42.28
G300	64.7	63.7	66.2	63.5	61.8	61.2	64.3	65.6	65.5	64.4	61.3
Beta	1.53	1.51	1.52	1.52	1.55	1.54	1.54	1.55	1.56	1.55	1.56
C300	0.57	0.63	0.53	0.63	0.49	0.66	0.71	0.48	0.50	0.58	0.53
Gamma	1.0	1.0	1.0	1.0	1.0	1.0	1.0	1.0	1.0	1.0	1.0
R300	12.3	10.2	11.7	12.0	12.0	13.2	12.5	11.5	11.8	11.7	12.5
Rlr+	8.2	8.16	8.16	8.2	8.23	8.16	8.12	8.29	8.12	8.11	7.96
Rlr-	8.08	8.08	8.12	8.07	8.04	8.12	8.02	8.04	8.08	8.04	8.04
Dark Sdc	4.2	4.0	4.1	4.2	4.2	4.3	4.2	4.1	4.1	4.1	4.2
Dark NEP (1 Hz)****, incl 10 nV/rtHz amp. noise	4.76	4.46	4.62	5.17	4.82	4.65	4.97	5.36	5.13	4.52	4.27
Dark NEP (0.1 Hz)****, incl 10 nV/rtHz amp. noise	6.63	7.32	7.71	7.44	6.86	7.33	7.75	7.17	6.35	7.73	6.56
Dark NEP (0.1 Hz)***, incl 10 nV/rtHz amp. noise	6.82	6.95	7.66	7.44	6.90	6.91	7.37	7.42	7.37	8.07	6.08
Vmax	4.55	4.15	4.49	4.47	4.42	4.63	4.60	4.46	4.49	4.44	4.48
*assumes νlower = 1.02 νcutoff											
**not tested											
***from TC data set											
****from non-TC data set											

PRELIMINARY

Pixel Performance											
Item											
BDA connector	J05	J05	J05	J05	J05	J05	J05	J05	J05	J05	J05
BDA pins	1,26	2,27	3,28	4,29	5,30	6,31	7,32	8,33	9,34	10,35	11,36
BoDAC Connector	6	6	6	6	6	6	6	6	6	6	6
Channel ID	**1**	**2**	**3**	**4**	**5**	**6**	**7**	**8**	**9**	**10**	**11**
Detector ID	D11	A10	E10	C10	B10	D10	A9	E9	C9	B9	D9
BDA Pixel Operability	Yes	Yes	Yes	Yes	Yes	Yes	Yes	Yes	Yes	Yes	Yes
BoDAC channel Operability	Yes	Yes	Yes	Yes	Yes	Yes	Yes	No	Yes	Yes	Yes
Noisy BoDAC channel	No	No	No	No	No	No	No	No	No	No	No
(NEPphoton/NEPtotal)^2 (derived)	0.56	0.56	0.60	0.58	0.56	0.55	0.57	N/A	0.57	0.57	0.56
Optical efficiency*	0.91	0.67	0.71	0.66	0.64	0.73	0.69	N/A	0.61	0.73	0.72
Detector time constant	45.4	41.4	4.3	4.8	4.6	5.6	4.9	0.0	5.6	4.7	4.2
Calibration uniformity**	N/A	N/A	N/A	N/A	N/A	N/A	N/A	N/A	N/A	N/A	N/A
Cross-talk (n-n)**	N/A	N/A	N/A	N/A	N/A	N/A	N/A	N/A	N/A	N/A	N/A
Cross-talk (non n-n)**	N/A	N/A	N/A	N/A	N/A	N/A	N/A	N/A	N/A	N/A	N/A
1/f knee frequency***	< 18	46	37	37	46	64	55	< 18	55	37	37
Pixel Design Values											
Item											
R0	141.3	99.2	114.4	107.5	96.5	94.3	107.5	N/M	92.9	86.2	94.2
Delta	39.68	41.94	42.25	42.06	41.69	41.80	41.68	N/M	41.31	42.03	41.22
G300	50.6	50.9	52.8	52.3	56.0	51.9	51.8	N/M	64.4	63.1	62.4
Beta	1.59	1.59	1.56	1.61	1.60	1.60	1.57	N/M	1.60	1.58	1.58
C300	3.81	3.53	0.38	0.41	0.42	0.49	0.42	N/M	0.57	0.47	0.41
Gamma	1.0	1.0	1.0	1.0	1.0	1.0	1.0	1.0	1.0	1.0	1.0
R300	14.0	13.5	16.3	14.9	12.7	12.6	14.1	N/M	11.6	11.9	11.6
Rlr+	8.32	8.32	8.25	8.28	8.24	8.24	8.2	8.24	8.23	8.29	8.24
Rlr-	8.24	8.24	8.15	8.21	8.14	8.12	8.12	8.16	8.11	8.12	8.18
Dark Sdc	4.4	4.5	4.6	4.5	4.3	4.3	4.5	N/M	4.1	4.2	4.1
Dark NEP (1 Hz)****, incl 10 nV/rtHz amp. noise	5.42	4.31	4.33	4.61	4.33	4.07	4.45	N/M	4.57	4.60	4.53
Dark NEP (0.1 Hz)****, incl 10 nV/rtHz amp. noise	5.26	5.57	6.08	6.13	6.56	6.56	6.58	N/M	7.06	6.88	7.14
Dark NEP (0.1 Hz)***, incl 10 nV/rtHz amp. noise	5.87	5.79	6.03	6.57	6.40	7.12	6.08	N/M	6.84	6.52	6.80
Vmax	4.40	4.26	4.74	4.54	4.34	4.16	4.40	N/M	4.46	4.45	4.39
*assumes νlower = 1.02 νcutoff											
**not tested											
***from TC data set											
****from non-TC data set											

PRELIMINARY

Pixel Performance											
Item											
BDA connector	J05	J05	J05	J05	J05	J05	J05	J05	J05	J05	J05
BDA pins	12,37	13,38	14,39	15,40	16,41	17,42	18,43	19,44	20,45	21,46	22,47
BoDAC Connector	6	6	6	6	6	6	6	6	6	6	6
Channel ID	**12**	**13**	**14**	**15**	**16**	**17**	**18**	**19**	**20**	**21**	**22**
Detector ID	A8	C8	E8	D8	B8	C7	E7	A7	D7	B7	C6
BDA Pixel Operability	Yes	Yes	Yes	Yes	Yes	Yes	Yes	Yes	Yes	Yes	Yes
BoDAC channel Operability	Yes	Yes	Yes	Yes	Yes	Yes	Yes	Yes	Yes	Yes	Yes
Noisy BoDAC channel	No	No	No	No	No	No	No	No	No	No	No
(NEPphoton/NEPtotal)^2 (derived)	0.56	0.55	0.58	0.61	0.58	0.58	0.57	0.57	0.55	0.57	0.59
Optical efficiency*	0.68	0.67	0.68	0.70	0.67	0.67	0.71	0.65	0.69	0.64	0.59
Detector time constant	5.8	7.5	4.2	4.1	4.7	4.7	4.5	5.5	4.5	5.3	3.9
Calibration uniformity**	N/A	N/A	N/A	N/A	N/A	N/A	N/A	N/A	N/A	N/A	N/A
Cross-talk (n-n)**	N/A	N/A	N/A	N/A	N/A	N/A	N/A	N/A	N/A	N/A	N/A
Cross-talk (non n-n)**	N/A	N/A	N/A	N/A	N/A	N/A	N/A	N/A	N/A	N/A	N/A
1/f knee frequency***	46	55	27	46	46	46	119	46	27	46	37
Pixel Design Values											
Item											
R0	97.7	80.2	91.6	105.4	97.9	100.0	88.1	88.0	83.7	89.5	109.6
Delta	41.03	41.76	42.07	42.09	41.30	41.52	41.86	41.93	41.62	41.81	41.38
G300	62.0	62.8	62.6	66.7	63.5	62.0	62.4	62.4	63.2	62.0	61.8
Beta	1.59	1.57	1.58	1.59	1.56	1.59	1.60	1.58	1.60	1.58	1.59
C300	0.57	0.75	0.41	0.42	0.47	0.46	0.45	0.54	0.45	0.52	0.38
Gamma	1.0	1.0	1.0	1.0	1.0	1.0	1.0	1.0	1.0	1.0	1.0
R300	11.7	10.7	12.7	14.7	12.2	12.9	11.9	12.0	10.9	12.0	13.8
Rlr+	8.2	8.22	8.24	8.24	8.22	8.24	8.24	8.2	8.24	8.24	8.28
Rlr-	8.08	8.12	8.13	8.11	8.12	8.12	8.08	8.11	8.15	8.12	8.12
Dark Sdc	4.1	4.0	4.2	4.4	4.2	4.2	4.2	4.2	4.1	4.2	4.3
Dark NEP (1 Hz)****, incl 10 nV/rtHz amp. noise	4.83	4.71	4.57	4.58	4.75	4.22	5.13	4.68	4.76	4.69	4.68
Dark NEP (0.1 Hz)****, incl 10 nV/rtHz amp. noise	6.91	7.06	6.67	6.82	6.93	6.90	7.18	6.91	6.49	6.78	8.56
Dark NEP (0.1 Hz)***, incl 10 nV/rtHz amp. noise	7.45	7.33	6.41	6.39	7.05	6.67	12.43	7.20	6.09	7.06	6.78
Vmax	4.41	4.20	4.57	5.07	4.53	4.60	4.42	4.44	4.28	4.43	4.77
*assumes νlower = 1.02 νcutoff											
**not tested											
***from TC data set											
****from non-TC data set											

PRELIMINARY

Pixel Performance											
Item											
BDA connector	J05	J05	J06	J06	J06	J06	J06	J06	J06	J06	J06
BDA pins	23,48	24,49	1,26	2,27	3,28	4,29	5,30	6,31	7,32	8,33	9,34
BoDAC Connector	6	6	3	3	3	3	3	3	3	3	3
Channel ID	**23**	**24**	**1**	**2**	**3**	**4**	**5**	**6**	**7**	**8**	**9**
Detector ID	E6	A6	G5	H6	J6	F6	G6	H7	F7	J7	G7
BDA Pixel Operability	Yes	Yes	Yes	Yes	Yes	Yes	Yes	Yes	Yes	No	Yes
BoDAC channel Operability	Yes	Yes	Yes	Yes	Yes	Yes	Yes	Yes	Yes	Yes	Yes
Noisy BoDAC channel	No	No	No	No	No	No	Yes	M. Noisy	Yes	No	Yes
(NEPphoton/NEPtotal)^2 (derived)	0.53	0.57	0.56	0.57	0.55	0.57	0.56	0.55	0.57	N/A	0.56
Optical efficiency*	0.70	0.70	0.83	0.71	0.68	0.79	0.91	0.73	0.77	N/A	0.72
Detector time constant	5.8	5.0	5.8	5.2	6.1	5.2	4.9	5.3	4.5	10.3	5.0
Calibration uniformity**	N/A	N/A	N/A	N/A	N/A	N/A	N/A	N/A	N/A	N/A	N/A
Cross-talk (n-n)**	N/A	N/A	N/A	N/A	N/A	N/A	N/A	N/A	N/A	N/A	N/A
Cross-talk (non n-n)**	N/A	N/A	N/A	N/A	N/A	N/A	N/A	N/A	N/A	N/A	N/A
1/f knee frequency***	27	27	27	27	37	37	64	37	46	N/M	64
Pixel Design Values											
Item											
R0	85.9	95.2	81.0	81.8	77.5	102.8	81.5	89.2	83.7	N/M	109.3
Delta	40.70	41.14	41.96	42.15	41.74	40.85	42.20	41.13	42.03	N/M	41.40
G300	62.6	64.6	63.4	64.2	63.7	63.3	62.8	63.4	63.5	N/M	51.1
Beta	1.58	1.55	1.57	1.56	1.55	1.57	1.58	1.57	1.59	N/M	1.57
C300	0.58	0.50	0.58	0.53	0.62	0.52	0.49	0.53	0.45	N/M	0.43
Gamma	1.0	1.0	1.0	1.0	1.0	1.0	1.0	1.0	1.0	1.0	1.0
R300	9.8	11.6	11.1	11.5	10.3	12.0	11.5	10.9	11.6	N/M	13.8
Rlr+	8.24	8.28	8.04	8.07	8.07	8	8	8.09	8.08	7.99	8.08
Rlr-	8.16	8.1	8	8.04	8.04	7.94	7.99	8.04	7.95	8	8.04
Dark Sdc	3.9	4.1	4.0	4.1	4.0	4.1	4.1	4.0	4.1	N/M	4.4
Dark NEP (1 Hz)****, incl 10 nV/rtHz amp. noise	4.60	4.96	4.83	4.73	4.67	5.16	8.19	6.79	9.99	N/M	9.90
Dark NEP (0.1 Hz)****, incl 10 nV/rtHz amp. noise	6.61	7.11	6.89	7.18	7.24	6.83	19.37	14.23	23.61	N/M	24.81
Dark NEP (0.1 Hz)***, incl 10 nV/rtHz amp. noise	6.40	6.72	6.29	6.59	6.74	6.98	10.08	8.88	11.71	N/M	11.63
Vmax	4.07	4.46	4.29	4.39	4.15	4.51	4.36	4.28	4.39	N/M	4.33
*assumes νlower = 1.02 νcutoff											
**not tested											
***from TC data set											
****from non-TC data set											

PRELIMINARY

Pixel Performance											
Item											
BDA connector	J06	J06	J06	J06	J06	J06	J06	J06	J06	J06	J06
BDA pins	10,35	11,36	12,37	13,38	14,39	15,40	16,41	17,42	18,43	19,44	20,45
BoDAC Connector	3	3	3	3	3	3	3	3	3	3	3
Channel ID	**10**	**11**	**12**	**13**	**14**	**15**	**16**	**17**	**18**	**19**	**20**
Detector ID	H8	F8	G8	J8	F9	H9	G9	J9	F10	H10	G10
BDA Pixel Operability	Yes	Yes	Yes	Yes	Yes	Yes	Yes	Yes	Yes	Yes	Yes
BoDAC channel Operability	Yes	Yes	Yes	Yes	Yes	Yes	No	Yes	Yes	Yes	Yes
Noisy BoDAC channel	M. Noisy	Yes	M. Noisy	No	No	No	No	No	No	No	No
(NEPphoton/NEPtotal)^2 (derived)	0.57	0.59	0.57	0.58	0.58	0.58	N/A	0.57	0.55	0.57	0.57
Optical efficiency*	0.73	0.68	0.68	0.65	0.69	0.73	N/A	0.57	0.71	0.76	0.59
Detector time constant	4.9	3.9	5.4	5.2	4.5	4.6	1.2	5.5	5.2	4.9	4.5
Calibration uniformity**	N/A	N/A	N/A	N/A	N/A	N/A	N/A	N/A	N/A	N/A	N/A
Cross-talk (n-n)**	N/A	N/A	N/A	N/A	N/A	N/A	N/A	N/A	N/A	N/A	N/A
Cross-talk (non n-n)**	N/A	N/A	N/A	N/A	N/A	N/A	N/A	N/A	N/A	N/A	N/A
1/f knee frequency***	55	37	55	46	37	46	< 18	27	27	37	27
Pixel Design Values											
Item											
R0	108.3	130.1	119.7	106.1	110.0	103.2	N/M	88.4	84.6	89.9	86.1
Delta	41.64	41.26	41.16	42.06	41.93	42.19	N/M	41.55	41.24	41.56	41.66
G300	52.9	51.8	50.2	53.1	51.6	52.6	N/M	64.8	64.0	64.8	65.8
Beta	1.57	1.57	1.62	1.56	1.59	1.58	N/M	1.55	1.58	1.57	1.58
C300	0.43	0.33	0.45	0.46	0.39	0.40	N/M	0.56	0.53	0.50	0.46
Gamma	1.0	1.0	1.0	1.0	1.0	1.0	1.0	1.0	1.0	1.0	1.0
R300	14.2	16.1	14.6	14.7	15.0	14.6	N/M	11.4	10.5	11.6	11.3
Rlr+	8.04	8	8.08	7.98	8	8.06	7.96	8	7.96	8.04	8.01
Rlr-	7.94	8	8.04	7.92	7.92	8.04	7.94	7.96	8.04	8	8
Dark Sdc	4.4	4.5	4.4	4.4	4.4	4.4	N/M	4.0	3.9	4.1	4.0
Dark NEP (1 Hz)****, incl 10 nV/rtHz amp. noise	5.59	7.87	4.80	4.77	4.50	4.59	N/M	5.03	5.00	4.70	5.23
Dark NEP (0.1 Hz)****, incl 10 nV/rtHz amp. noise	12.80	18.10	8.01	8.36	6.91	6.81	N/M	6.76	6.95	7.09	6.62
Dark NEP (0.1 Hz)***, incl 10 nV/rtHz amp. noise	8.01	9.85	8.33	7.36	6.46	6.74	N/M	7.30	6.72	6.87	6.82
Vmax	4.45	4.71	4.44	4.52	4.51	4.48	N/M	4.42	4.22	4.46	4.43
*assumes νlower = 1.02 νcutoff											
**not tested											
***from TC data set											
****from non-TC data set											

PRELIMINARY

Pixel Performance							
Item					**Unit**	**Reference**	**Note**
BDA connector	J06	J06	J06	J06			
BDA pins	21,46	22,47	23,48	24,49			
BoDAC Connector	3	3	3	3			
Channel ID	**21**	**22**	**23**	**24**			
Detector ID	F11	J10	H11	G11			
BDA Pixel Operability	Yes	Yes	Yes	Yes			
BoDAC channel Operability	Yes	Yes	Yes	Yes			
Noisy BoDAC channel	No	No	No	No			
(NEPphoton/NEPtotal)^2 (derived)	0.56	0.56	0.54	0.57		BDA-PER-02	at 30 mV bias
Optical efficiency*	0.74	0.73	0.76	0.73		BDA-PER-05	
Detector time constant	5.7	5.8	5.1	5.0	ms	BDA-PER-07	at 20 mV bias
Calibration uniformity**	N/A	N/A	N/A	N/A		BDA-PER-08	
Cross-talk (n-n)**	N/A	N/A	N/A	N/A		BDA-PER-09	
Cross-talk (non n-n)**	N/A	N/A	N/A	N/A		BDA-PER-09	
1/f knee frequency***	27	27	27	18	mHz	BDA-PER-10	at 21.2 mV bias
Pixel Design Values							
Item					**Unit**	**Reference**	**Note**
R0	81.7	81.9	82.5	98.9	Ohms	BDA-SSSD	
Delta	41.70	41.87	41.04	40.47	K	BDA-SSSD	
G300	66.4	64.1	65.3	67.1	pW/K	BDA-SSSD	
Beta	1.56	1.57	1.55	1.53		BDA-SSSD	
C300	0.59	0.59	0.52	0.52	pJ/K	BDA-SSSD	
Gamma	1.0	1.0	1.0	1.0			
R300	10.8	11.1	9.9	10.9	MOhms	BDA-SSSD	
Rlr+	8	8.08	8.03	8	MOhms	BDA-SSSD	room temp
Rlr-	8.02	8.04	7.81	8.12	MOhms	BDA-SSSD	room temp
Dark Sdc	4.0	4.0	3.9	4.0	e8 V/W	BDA-SSSD	at 21.2 mV bias
Dark NEP (1 Hz)****, incl 10 nV/rtHz amp. noise	4.64	4.86	4.88	5.13	e-17 W/rtHz	derived	at 21.2 mV bias
Dark NEP (0.1 Hz)****, incl 10 nV/rtHz amp. noise	6.91	6.94	6.77	7.92	e-17 W/rtHz	derived	at 21.2 mV bias
Dark NEP (0.1 Hz)***, incl 10 nV/rtHz amp. noise	6.48	6.47	6.56	6.69	e-17 W/rtHz	derived	at 21.2 mV bias
Vmax	4.34	4.32	4.15	4.43	mVrms	BDA-DRCU-22	
*assumes νlower = 1.02 νcutoff							
**not tested							
***from TC data set							
****from non-TC data set							

PRELIMINARY

2/19/2005

Symbol	Units	Value	Value	Value	Value	Value	Value	Value	Value	Value	Value	Value	Value	Value
T0	K	0.3	Base Temperature											
Vn	nV/rtHz	10	Amplifier Voltage Noise											
Q	pW	0	Absorbed Power Onto Bolometer											
NEP_{photon}	1e-17 W/rtHz	0.00	Noise in Absorbed Optical Power											
Vbias	mV	21.2	Bias Across Bolometer & Load Resistors											
			Detector ID											
		Target	**D6**	**B6**	**C5**	**A5**	**E5**	**B5**	**D5**	**C4**	**A4**	**D4**	**B4**	**C3**
Pthermal	pW	4.424	4.460	4.108	4.172	4.385	4.434	4.798	4.378	4.086	4.636	4.101	4.428	5.112
Pelec+Q	pW	4.424	4.460	4.108	4.172	4.385	4.434	4.798	4.378	4.086	4.636	4.101	4.428	5.112
Tbolo	K	0.37055	0.35858	0.35568	0.35648	0.35937	0.35941	0.36673	0.35886	0.35346	0.36014	0.35579	0.35830	0.36588
T/T0		1.235	1.195	1.186	1.188	1.198	1.198	1.222	1.196	1.178	1.200	1.186	1.194	1.220
Rbolo	Ω	7.38E+06	4.19E+06	3.71E+06	3.73E+06	4.05E+06	4.15E+06	4.67E+06	4.06E+06	3.63E+06	4.45E+06	3.68E+06	4.14E+06	5.31E+06
Vbolo	mV	5.71	4.32	3.90	3.94	4.21	4.29	4.73	4.21	3.85	4.54	3.88	4.28	5.21
Ibolo	nA	0.77	1.03	1.05	1.06	1.04	1.03	1.01	1.04	1.06	1.02	1.06	1.03	0.98
A		-5.31	-5.34	-5.38	-5.38	-5.39	-5.40	-5.43	-5.39	-5.38	-5.35	-5.37	-5.30	-5.29
C	pJ/K	1.24	0.61	0.64	0.67	0.61	0.73	1.37	0.60	0.66	0.71	0.66	0.63	0.54
G	pW/K	72.8	86.9	83.8	83.9	84.4	85.3	83.7	85.0	86.0	88.1	83.1	86.2	89.4
Z/R		0.069	0.134	0.148	0.143	0.124	0.123	0.082	0.128	0.161	0.123	0.146	0.137	0.095
τ	ms	12.111	4.833	5.210	5.403	4.936	5.861	11.172	4.855	5.238	5.544	5.399	4.995	4.216
Sdc	V/W	5.86E+08	4.06E+08	3.91E+08	3.92E+08	4.08E+08	4.11E+08	4.42E+08	4.07E+08	3.82E+08	4.16E+08	3.92E+08	4.03E+08	4.48E+08
$NEP_{johnson}$	1e-17 W/rtHz	1.092	1.229	1.211	1.208	1.197	1.201	1.162	1.204	1.236	1.228	1.205	1.233	1.229
NEP_{phonon}	1e-17 W/rtHz	2.006	2.162	2.116	2.121	2.133	2.144	2.135	2.138	2.144	2.181	2.112	2.157	2.212
NEP_{load}	1e-17 W/rtHz	0.077	0.134	0.136	0.132	0.120	0.121	0.086	0.124	0.149	0.128	0.134	0.137	0.110
NEP_{amp}	1e-17 W/rtHz	1.705	2.463	2.555	2.549	2.450	2.431	2.262	2.457	2.618	2.404	2.554	2.480	2.234
NEP_{det}	1e-17 W/rtHz	3.498	4.457	4.528	4.521	4.411	4.396	4.184	4.425	4.627	4.401	4.522	4.475	4.233
DQE		0.000	0.000	0.000	0.000	0.000	0.000	0.000	0.000	0.000	0.000	0.000	0.000	0.000
Vn(det)	nV/rtHz	20.5	18.1	17.7	17.7	18.0	18.1	18.5	18.0	17.7	18.3	17.7	18.0	18.9
Vn(total)	nV/rtHz	20.5	18.1	17.7	17.7	18.0	18.1	18.5	18.0	17.7	18.3	17.7	18.0	18.9
Vn(measured) at 1Hz (300 mK)			19.1	18.4	18.0	19.4	19.8	30.3	18.3	18.2	19.1	18.3	19.3	20.4
NEP(measured) at 1 Hz			4.70	4.70	4.59	4.75	4.81	6.85	4.50	4.77	4.59	4.67	4.79	4.56
Vn(measured) at 0.1 Hz (300 mK)			30.4	27.4	25.9	27.9	29.6	91	27.3	26.8	28.3	29.6	26.5	30.1
NEP(measured) at 0.1 Hz			7.49	7.00	6.60	6.84	7.19	20.58	6.71	7.02	6.80	7.56	6.57	6.72
Vn(measured) at 1 Hz - No TC			22.6	20.2	20.4	21.3	22.9	24.5	22.1	21.1	23.6	21.4	22.9	25.4
NEP(measured) at Hz - No TC			5.6	5.2	5.2	5.2	5.6	5.5	5.4	5.5	5.7	5.5	5.7	5.7
Vn(measured) at .1 Hz - No TC			26.5	25.4	23.4	27.1	26.1	33.1	27.5	25.5	28.4	27.8	27.4	31.3
NEP(measured) at .1Hz - No TC			6.5	6.5	6.0	6.6	6.3	7.5	6.8	6.7	6.8	7.1	6.8	7.0

PRELIMINARY

2/19/2005

Symbol	Value	Value	Value	Value	Value	Value	Value	Value	Value	Value	Value	Value	Value	Value	Value
T0															
Vn															
Q															
NEP_{photon}															
Vbias															
	B3	A3	A2	D3	C2	B2	D2	A1	C1	B1	DK1	D1	F12	J11	E12
Pthermal	4.357	4.377	4.267	4.270	4.401	4.408	4.713	4.599	4.375	4.375	4.452	4.495	4.319	4.250	4.515
Pelec+Q	4.357	4.377	4.267	4.270	4.401	4.408	4.713	4.599	4.375	4.375	4.452	4.495	4.319	4.250	4.515
Tbolo	0.35900	0.35810	0.35805	0.35706	0.37294	0.37323	0.37617	0.37475	0.37223	0.37170	0.37233	0.37267	0.35804	0.35600	0.36007
T/T0	1.197	1.194	1.193	1.190	1.243	1.244	1.254	1.249	1.241	1.239	1.241	1.242	1.193	1.187	1.200
Rbolo	4.02E+06	4.03E+06	3.90E+06	3.91E+06	4.09E+06	4.10E+06	4.64E+06	4.47E+06	4.10E+06	4.11E+06	4.26E+06	4.33E+06	3.80E+06	3.75E+06	4.11E+06
Vbolo	4.19	4.20	4.08	4.09	4.24	4.25	4.67	4.53	4.23	4.24	4.36	4.41	4.05	3.99	4.31
Ibolo	1.04	1.04	1.05	1.04	1.04	1.04	1.01	1.01	1.03	1.03	1.02	1.02	1.07	1.06	1.05
A	-5.37	-5.37	-5.41	-5.36	-5.27	-5.28	-5.34	-5.27	-5.30	-5.25	-5.28	-5.27	-5.33	-5.39	-5.42
C	0.76	0.78	0.68	0.64	0.56	0.54	0.66	0.60	0.55	0.65	1.39	0.69	0.77	0.61	0.62
G	84.3	85.9	83.8	85.0	70.7	70.7	72.8	71.8	70.9	71.2	71.8	72.3	84.8	86.1	86.3
Z/R	0.129	0.134	0.130	0.140	0.064	0.063	0.043	0.052	0.064	0.070	0.064	0.064	0.137	0.145	0.119
τ	6.168	6.212	5.496	5.166	5.199	5.038	5.963	5.547	5.108	5.957	12.775	6.292	6.181	4.809	4.934
Sdc	4.06E+08	4.03E+08	4.03E+08	3.98E+08	4.44E+08	4.45E+08	4.69E+08	4.61E+08	4.46E+08	4.43E+08	4.50E+08	4.52E+08	3.92E+08	3.89E+08	4.08E+08
$NEP_{johnson}$	1.204	1.217	1.193	1.216	1.082	1.081	1.078	1.083	1.079	1.091	1.088	1.094	1.218	1.223	1.203
NEP_{phonon}	2.131	2.148	2.122	2.137	1.978	1.977	2.015	2.003	1.979	1.984	1.995	2.001	2.135	2.148	2.155
NEP_{load}	0.124	0.131	0.123	0.134	0.058	0.057	0.042	0.050	0.058	0.064	0.060	0.061	0.131	0.137	0.118
NEP_{amp}	2.464	2.484	2.481	2.510	2.251	2.248	2.132	2.171	2.244	2.258	2.221	2.214	2.553	2.574	2.453
NEP_{det}	4.428	4.467	4.437	4.490	4.049	4.045	3.935	3.973	4.040	4.064	4.028	4.026	4.537	4.571	4.427
DQE	0.000	0.000	0.000	0.000	0.000	0.000	0.000	0.000	0.000	0.000	0.000	0.000	0.000	0.000	0.000
Vn(det)	18.0	18.0	17.9	17.9	18.0	18.0	18.5	18.3	18.0	18.0	18.1	18.2	17.8	17.8	18.0
Vn(total)	18.0	18.0	17.9	17.9	18.0	18.0	18.5	18.3	18.0	18.0	18.1	18.2	17.8	17.8	18.0
Vn(measured) a	19.4	19.6	26.5	19.7	19.6	19.1	19.0	23.8	18.9	26.9	24.3	19.8	23.2	18.7	18.4
NEP(measured)	4.78	4.87	6.57	4.95	4.41	4.29	4.05	5.17	4.24	6.07	5.40	4.38	5.92	4.81	4.51
Vn(measured) a	28.7	27.7	34	25.8	26.9	27.3	28	39.4	31.6	37.2	43.2	30.9	45.2	27.4	25.4
NEP(measured)	7.07	6.88	8.43	6.48	6.05	6.14	5.97	8.55	7.09	8.40	9.60	6.84	11.54	7.05	6.23
Vn(measured) a	23	24.1	34	21.3	22.5	22.9	23.4	26.5	22.3	25.4	27.1	23	27.3	21.6	22.1
NEP(measured)	5.7	6.0	8.4	5.3	5.1	5.1	5.0	5.8	5.0	5.7	6.0	5.1	7.0	5.6	5.4
Vn(measured) a	30.4	27.7	36.4	26.2	27	25.9	27	34.3	27.4	34.7	34.9	27.2	31.6	25.9	22.9
NEP(measured)	7.5	6.9	9.0	6.6	6.1	5.8	5.8	7.4	6.1	7.8	7.8	6.0	8.1	6.7	5.6

PRELIMINARY

2/19/2005

Symbol	Value	Value	Value	Value	Value	Value	Value	Value	Value	Value	Value	Value	Value	Value	Value
T0															
Vn															
Q															
NEP_{photon}															
Vbias															
	H12	G12	F13	E13	J12	H13	G13	F14	E14	J13	H14	G14	J14	F15	H15
Pthermal	4.365	4.198	4.531	4.567	4.507	4.648	4.452	4.582	4.585	4.322	4.276	4.409	4.544	4.491	4.441
Pelec+Q	4.365	4.198	4.531	4.567	4.507	4.648	4.452	4.582	4.585	4.322	4.276	4.409	4.544	4.491	4.441
Tbolo	0.35756	0.35504	0.35680	0.36143	0.35928	0.35905	0.35773	0.36047	0.36181	0.35668	0.35575	0.35756	0.36045	0.35953	0.35845
T/T0	1.192	1.183	1.189	1.205	1.198	1.197	1.192	1.202	1.206	1.189	1.186	1.192	1.202	1.198	1.195
Rbolo	3.87E+06	3.65E+06	4.14E+06	4.19E+06	4.15E+06	4.28E+06	4.05E+06	4.22E+06	4.31E+06	3.88E+06	3.78E+06	4.06E+06	4.21E+06	4.10E+06	4.05E+06
Vbolo	4.11	3.92	4.33	4.38	4.33	4.46	4.25	4.40	4.44	4.10	4.02	4.23	4.38	4.29	4.24
Ibolo	1.06	1.07	1.05	1.04	1.04	1.04	1.05	1.04	1.03	1.06	1.06	1.04	1.04	1.05	1.05
A	-5.38	-5.37	-5.44	-5.35	-5.34	-5.43	-5.40	-5.38	-5.41	-5.42	-5.36	-5.41	-5.40	-5.38	-5.40
C	0.60	0.62	0.61	0.54	0.52	0.58	0.55	0.57	0.64	0.71	0.65	0.59	0.63	0.58	0.65
G	86.3	86.4	90.7	85.3	86.7	89.8	87.9	86.9	85.1	86.6	86.9	87.2	86.0	86.3	86.7
Z/R	0.135	0.153	0.135	0.116	0.128	0.122	0.134	0.119	0.108	0.137	0.148	0.133	0.116	0.125	0.128
τ	4.738	4.924	4.618	4.331	4.140	4.419	4.317	4.468	5.112	5.621	5.118	4.623	5.006	4.630	5.133
Sdc	3.94E+08	3.82E+08	3.99E+08	4.11E+08	4.05E+08	4.08E+08	4.00E+08	4.10E+08	4.20E+08	3.96E+08	3.87E+08	4.02E+08	4.13E+08	4.05E+08	4.03E+08
$NEP_{johnson}$	1.218	1.234	1.240	1.206	1.223	1.226	1.227	1.212	1.188	1.216	1.236	1.220	1.200	1.214	1.214
NEP_{phonon}	2.153	2.149	2.205	2.148	2.163	2.200	2.172	2.165	2.147	2.156	2.158	2.164	2.156	2.156	2.159
NEP_{load}	0.130	0.143	0.137	0.117	0.128	0.126	0.133	0.120	0.108	0.132	0.142	0.131	0.116	0.124	0.126
NEP_{amp}	2.536	2.619	2.505	2.433	2.467	2.451	2.501	2.438	2.378	2.526	2.583	2.485	2.420	2.468	2.479
NEP_{det}	4.528	4.628	4.530	4.403	4.458	4.460	4.503	4.420	4.332	4.517	4.593	4.477	4.390	4.451	4.465
DQE	0.000	0.000	0.000	0.000	0.000	0.000	0.000	0.000	0.000	0.000	0.000	0.000	0.000	0.000	0.000
Vn(det)	17.9	17.7	18.1	18.1	18.1	18.2	18.0	18.1	18.2	17.9	17.8	18.0	18.1	18.0	18.0
Vn(total)	17.9	17.7	18.1	18.1	18.1	18.2	18.0	18.1	18.2	17.9	17.8	18.0	18.1	18.0	18.0
Vn(measured) a	18.4	18.4	21.7	19.8	20.8	19.6	19.3	9.2	25.0	19.0	17.9	18.5	17.9	18.9	18.6
NEP(measured)	4.67	4.82	5.43	4.82	5.13	4.80	4.83	2.23	5.95	4.80	4.62	4.60	4.33	4.66	4.61
Vn(measured) a	24.6	26.2	27.9	26.6	28.7	24.6	25.5	12.5	29.6	28.5	25.7	26.1	26.9	24.8	25.3
NEP(measured)	6.24	6.86	6.99	6.47	7.08	6.03	6.38	3.05	7.04	7.20	6.64	6.49	6.51	6.12	6.27
Vn(measured) a	21.5	20.6	22.3	23.8	25.6	22.6	22.5	10.5	25.2	22.1	21	21.8	22.7	21.1	23
NEP(measured)	5.5	5.4	5.6	5.8	6.3	5.5	5.6	2.6	6.0	5.6	5.4	5.4	5.5	5.2	5.7
Vn(measured) a	24.3	23.8	25.6	25.6	26.9	24.8	25.4	11.2	25.9	24.4	21.4	23.2	25.4	24.5	25.7
NEP(measured)	6.2	6.2	6.4	6.2	6.6	6.1	6.4	2.7	6.2	6.2	5.5	5.8	6.1	6.0	6.4

PRELIMINARY

Symbol	Value	Value	Value	Value	Value	Value	Value	Value	Value	Value	Value	Value	Value	Value	Value
T0															
Vn															
Q															
NEP_{photon}															
Vbias															
	J15	G15	H16	DK2	F16	E15	R1	D16	T1	B16	C15	A15	D15	B15	C14
Pthermal	4.282	4.481	#VALUE!	4.367	4.425	4.391	#VALUE!	4.315	#VALUE!	4.225	4.267	4.310	4.060	4.263	4.312
Pelec+Q	4.282	4.481	#VALUE!	4.367	4.425	4.391	#VALUE!	4.315	#VALUE!	4.225	4.267	4.310	4.060	4.263	4.312
Tbolo	0.35765	0.36021	#VALUE!	0.36017	0.36086	0.35979	#VALUE!	0.35958	#VALUE!	0.35732	0.35721	0.35733	0.35398	0.35712	0.35709
T/T0	1.192	1.201	#VALUE!	1.201	1.203	1.199	#VALUE!	1.199	#VALUE!	1.191	1.191	1.191	1.180	1.190	1.190
Rbolo	3.80E+06	4.06E+06	#VALUE!	3.98E+06	4.00E+06	3.90E+06	#VALUE!	4.16E+06	#VALUE!	4.03E+06	4.13E+06	4.14E+06	3.78E+06	4.12E+06	4.11E+06
Vbolo	4.03	4.27	#VALUE!	4.17	4.20	4.14	#VALUE!	4.24	#VALUE!	4.13	4.20	4.22	3.92	4.19	4.21
Ibolo	1.06	1.05	#VALUE!	1.05	1.05	1.06	#VALUE!	1.02	#VALUE!	1.02	1.02	1.02	1.04	1.02	1.02
A	-5.40	-5.37	#VALUE!	-5.37	-5.37	-5.39	#VALUE!	-5.36	#VALUE!	-5.41	-5.40	-5.41	-5.41	-5.40	-5.43
C	0.57	0.54	#VALUE!	0.59	0.58	0.63	#VALUE!	0.52	#VALUE!	0.62	0.53	0.62	0.61	0.58	0.65
G	84.5	85.2	#VALUE!	83.0	83.5	84.0	#VALUE!	82.6	#VALUE!	83.9	85.2	85.6	85.1	85.1	86.1
Z/R	0.133	0.122	#VALUE!	0.121	0.118	0.122	#VALUE!	0.125	#VALUE!	0.135	0.138	0.135	0.156	0.138	0.135
τ	4.541	4.347	#VALUE!	4.846	4.731	5.055	#VALUE!	4.327	#VALUE!	5.029	4.268	4.943	4.930	4.666	5.148
Sdc	3.96E+08	4.06E+08	#VALUE!	4.08E+08	4.07E+08	4.02E+08	#VALUE!	4.17E+08	#VALUE!	4.09E+08	4.10E+08	4.10E+08	3.93E+08	4.10E+08	4.08E+08
$NEP_{johnson}$	1.202	1.205	#VALUE!	1.188	1.190	1.194	#VALUE!	1.189	#VALUE!	1.198	1.210	1.209	1.221	1.211	1.211
NEP_{phonon}	2.131	2.144	#VALUE!	2.117	2.122	2.128	#VALUE!	2.112	#VALUE!	2.122	2.135	2.143	2.130	2.135	2.147
NEP_{load}	0.125	0.120	#VALUE!	0.116	0.114	0.117	#VALUE!	0.120	#VALUE!	0.129	0.133	0.131	0.145	0.134	0.132
NEP_{amp}	2.526	2.465	#VALUE!	2.453	2.456	2.489	#VALUE!	2.400	#VALUE!	2.445	2.437	2.437	2.545	2.441	2.448
NEP_{det}	4.497	4.437	#VALUE!	4.400	4.407	4.449	#VALUE!	4.341	#VALUE!	4.400	4.405	4.408	4.530	4.409	4.423
DQE	0.000	0.000	#VALUE!	0.000	0.000	0.000	#VALUE!	0.000	#VALUE!	0.000	0.000	0.000	0.000	0.000	0.000
Vn(det)	17.8	18.0	#VALUE!	17.9	17.9	17.9	#VALUE!	18.1	#VALUE!	18.0	18.1	18.1	17.8	18.1	18.1
Vn(total)	17.8	18.0	#VALUE!	17.9	17.9	17.9	#VALUE!	18.1	#VALUE!	18.0	18.1	18.1	17.8	18.1	18.1
Vn(measured) a	20.1	19.0	7.9	20.2	19.7	19.8	12.8	20.8	28.5	20.3	27.4	20.5	18.4	20.1	20.7
NEP(measured)	5.08	4.68	#VALUE!	4.96	4.84	4.93	#VALUE!	4.99	#VALUE!	4.96	6.68	5.00	4.68	4.91	5.07
Vn(measured) a	26.6	25.4	8.98	26.6	33.2	24.1	12.1	27.4	35.5	28	33.8	26.9	26.2	42.9	26
NEP(measured)	6.72	6.26	#VALUE!	6.52	8.15	6.00	#VALUE!	6.58	#VALUE!	6.85	8.24	6.56	6.67	10.47	6.37
Vn(measured) a	24.8	23.3	7.71	25.1	23.4	22.6	11.9	23.2	35	22.9	30.9	22.1	20.8	22.2	23.2
NEP(measured)	6.3	5.7	#VALUE!	6.2	5.7	5.6	#VALUE!	5.6	#VALUE!	5.6	7.5	5.4	5.3	5.4	5.7
Vn(measured) a	28.1	24.4	8.62	25.2	40.5	23.6	13.1	25.9	36.9	26.2	30.7	27.2	24.1	27.1	53.5
NEP(measured)	7.1	6.0	#VALUE!	6.2	9.9	5.9	#VALUE!	6.2	#VALUE!	6.4	7.5	6.6	6.1	6.6	13.1

PRELIMINARY

Symbol	Value	Value	Value	Value	Value	Value	Value	Value	Value	Value	Value	Value	Value	Value	Value
T0															
Vn															
Q															
NEP_{photon}															
Vbias															
	D14	A14	A13	B14	C13	B13	D13	A12	C12	D12	B12	E11	A11	C11	B11
Pthermal	4.971	4.296	4.199	4.227	4.252	4.295	4.419	4.316	#VALUE!	4.014	4.419	4.260	4.209	4.186	4.059
Pelec+Q	4.971	4.296	4.199	4.227	4.252	4.295	4.419	4.316	#VALUE!	4.014	4.419	4.260	4.209	4.186	4.059
Tbolo	0.36425	0.35790	0.35850	0.35691	0.35579	0.35786	0.35557	0.35937	#VALUE!	0.35462	0.35683	0.35722	0.35972	0.35725	0.35537
T/T0	1.214	1.193	1.195	1.190	1.186	1.193	1.185	1.198	#VALUE!	1.182	1.189	1.191	1.199	1.191	1.185
Rbolo	5.35E+06	4.12E+06	3.99E+06	4.04E+06	4.07E+06	4.10E+06	4.32E+06	4.15E+06	#VALUE!	3.67E+06	4.26E+06	4.02E+06	3.91E+06	3.90E+06	3.66E+06
Vbolo	5.16	4.21	4.09	4.13	4.16	4.20	4.37	4.23	#VALUE!	3.84	4.34	4.14	4.06	4.04	3.85
Ibolo	0.96	1.02	1.03	1.02	1.02	1.02	1.01	1.02	#VALUE!	1.05	1.02	1.03	1.04	1.04	1.05
A	-5.34	-5.38	-5.37	-5.38	-5.38	-5.42	-5.38	-5.34	#VALUE!	-5.37	-5.40	-5.42	-5.38	-5.42	-5.39
C	0.49	0.63	42.15	0.70	0.59	0.71	0.62	0.61	#VALUE!	0.75	0.56	0.63	1.83	0.63	0.64
G	89.2	84.7	81.9	84.5	86.4	84.7	90.3	83.2	#VALUE!	83.3	88.7	84.9	80.6	83.5	83.3
Z/R	0.101	0.135	0.132	0.141	0.147	0.131	0.149	0.130	#VALUE!	0.156	0.140	0.135	0.123	0.136	0.150
τ	3.879	5.055	349.771	5.712	4.693	5.759	4.781	5.041	#VALUE!	6.154	4.375	5.101	15.319	5.164	5.205
Sdc	4.52E+08	4.10E+08	4.10E+08	4.06E+08	4.03E+08	4.11E+08	4.05E+08	4.13E+08	#VALUE!	3.90E+08	4.07E+08	4.07E+08	4.10E+08	4.04E+08	3.91E+08
$NEP_{johnson}$	1.223	1.208	1.188	1.211	1.228	1.200	1.259	1.201	#VALUE!	1.214	1.237	1.203	1.171	1.196	1.207
NEP_{phonon}	2.203	2.132	2.099	2.129	2.151	2.132	2.197	2.116	#VALUE!	2.108	2.178	2.133	2.085	2.114	2.109
NEP_{load}	0.115	0.131	0.124	0.135	0.143	0.127	0.153	0.126	#VALUE!	0.142	0.141	0.129	0.114	0.128	0.136
NEP_{amp}	2.213	2.439	2.437	2.462	2.480	2.434	2.471	2.419	#VALUE!	2.564	2.455	2.459	2.436	2.477	2.560
NEP_{det}	4.204	4.405	4.375	4.430	4.471	4.393	4.500	4.370	#VALUE!	4.536	4.461	4.424	4.357	4.431	4.528
DQE	0.000	0.000	0.000	0.000	0.000	0.000	0.000	0.000	#VALUE!	0.000	0.000	0.000	0.000	0.000	0.000
Vn(det)	19.0	18.1	18.0	18.0	18.0	18.1	18.2	18.1	#VALUE!	17.7	18.2	18.0	17.9	17.9	17.7
Vn(total)	19.0	18.1	18.0	18.0	18.0	18.1	18.2	18.1	#VALUE!	17.7	18.2	18.0	17.9	17.9	17.7
Vn(measured) a	26.8	19.7	16.9	19.7	23.6	19.1	20.8	20.1	46.0	17.6	19.4	17.5	20.6	20.5	19.3
NEP(measured)	5.93	4.81	4.12	4.85	5.85	4.65	5.14	4.86	#VALUE!	4.51	4.76	4.30	5.02	5.08	4.94
Vn(measured) a	32	27.6	25.2	26.7	29.6	26.5	27	31	46.3	24.4	30.3	27.3	43.3	33.1	33.6
NEP(measured)	7.08	6.73	6.14	6.57	7.34	6.45	6.67	7.50	#VALUE!	6.26	7.44	6.71	10.55	8.20	8.60
Vn(measured) a	28.9	21.8	19.3	20.8	26.2	22	22.1	21.8	44.5	19.6	22.3	21.4	22	22.6	21.5
NEP(measured)	6.4	5.3	4.7	5.1	6.5	5.4	5.5	5.3	#VALUE!	5.0	5.5	5.3	5.4	5.6	5.5
Vn(measured) a	31.1	25.9	26.2	28.1	28.5	29.2	28.3	27	44.5	23.8	27.5	24.3	31.4	26.6	25.8
NEP(measured)	6.9	6.3	6.4	6.9	7.1	7.1	7.0	6.5	#VALUE!	6.1	6.8	6.0	7.7	6.6	6.6

PRELIMINARY

Symbol	Value	Value	Value	Value	Value	Value	Value	Value	Value	Value	Value	Value	Value	Value	Value
T0															
Vn															
Q															
NEP_{photon}															
Vbias															
	E1	F1	T2	H1	G1	J1	H2	F2	J2	G2	H3	J3	E2	F3	G3
Pthermal	4.893	4.434	#VALUE!	4.367	4.605	4.420	4.673	4.247	4.381	4.437	4.205	4.342	4.401	4.576	4.255
Pelec+Q	4.893	4.434	#VALUE!	4.367	4.605	4.420	4.673	4.247	4.381	4.437	4.205	4.342	4.401	4.576	4.255
Tbolo	0.37821	0.37147	#VALUE!	0.37056	0.37458	0.37080	0.37372	0.36894	0.35990	0.35848	0.35517	0.35961	0.35954	0.36093	0.35805
T/T0	1.261	1.238	#VALUE!	1.235	1.249	1.236	1.246	1.230	1.200	1.195	1.184	1.199	1.198	1.203	1.194
Rbolo	5.04E+06	4.21E+06	#VALUE!	4.13E+06	4.55E+06	4.21E+06	4.64E+06	3.89E+06	4.12E+06	4.15E+06	3.78E+06	4.03E+06	4.04E+06	4.32E+06	3.80E+06
Vbolo	4.97	4.32	#VALUE!	4.24	4.58	4.31	4.65	4.07	4.25	4.29	3.99	4.19	4.22	4.45	4.02
Ibolo	0.98	1.03	#VALUE!	1.03	1.01	1.02	1.00	1.04	1.03	1.03	1.05	1.04	1.04	1.03	1.06
A	-5.28	-5.30	#VALUE!	-5.30	-5.25	-5.31	-5.26	-5.29	-5.33	-5.44	-5.37	-5.35	-5.41	-5.38	-5.35
C	0.64	0.61	#VALUE!	0.68	0.48	0.76	0.59	0.56	0.62	0.66	0.67	0.69	0.62	0.68	0.75
G	73.8	72.6	#VALUE!	72.1	72.5	72.7	74.2	71.5	83.2	86.4	86.0	82.9	84.5	85.8	83.2
Z/R	0.039	0.069	#VALUE!	0.072	0.059	0.069	0.060	0.080	0.124	0.124	0.150	0.124	0.122	0.114	0.133
τ	5.779	5.581	#VALUE!	6.168	4.357	6.912	5.291	5.155	5.044	5.228	5.320	5.662	5.013	5.446	6.143
Sdc	4.82E+08	4.46E+08	#VALUE!	4.43E+08	4.60E+08	4.46E+08	4.60E+08	4.32E+08	4.12E+08	4.10E+08	3.90E+08	4.10E+08	4.08E+08	4.18E+08	3.97E+08
$NEP_{johnson}$	1.092	1.095	#VALUE!	1.092	1.098	1.093	1.108	1.092	1.196	1.203	1.227	1.191	1.193	1.201	1.199
NEP_{phonon}	2.034	2.001	#VALUE!	1.994	2.007	2.003	2.030	1.983	2.123	2.157	2.148	2.118	2.134	2.156	2.118
NEP_{load}	0.040	0.064	#VALUE!	0.066	0.057	0.064	0.060	0.071	0.120	0.122	0.141	0.119	0.118	0.115	0.125
NEP_{amp}	2.073	2.245	#VALUE!	2.257	2.173	2.241	2.173	2.315	2.427	2.436	2.567	2.440	2.448	2.393	2.517
NEP_{det}	3.889	4.060	#VALUE!	4.069	3.986	4.057	4.003	4.129	4.379	4.410	4.565	4.389	4.406	4.361	4.479
DQE	0.000	0.000	#VALUE!	0.000	0.000	0.000	0.000	0.000	0.000	0.000	0.000	0.000	0.000	0.000	0.000
Vn(det)	18.8	18.1	#VALUE!	18.0	18.3	18.1	18.4	17.8	18.0	18.1	17.8	18.0	18.0	18.2	17.8
Vn(total)	18.8	18.1	#VALUE!	18.0	18.3	18.1	18.4	17.8	18.0	18.1	17.8	18.0	18.0	18.2	17.8
Vn(measured) a	21.7	0.0	23.5	19.3	19.5	21.5	19.9	20.7	20.2	56.5	18.7	20.5	18.7	19.9	17.7
NEP(measured)	4.50	0.00	#VALUE!	4.36	4.24	4.82	4.32	4.79	4.90	13.77	4.80	5.00	4.58	4.76	4.46
Vn(measured) a	27.7	0	39.5	28.6	26.5	29.4	28.8	28.9	27.6	646	27.2	29.9	27.7	27.7	29.1
NEP(measured)	5.74	0.00	#VALUE!	6.46	5.76	6.59	6.26	6.69	6.70	157.39	6.98	7.30	6.78	6.63	7.32
Vn(measured) a	27.8	0	31.1	23.4	25.5	25.7	25.3	24.2	25.6	54.7	22.5	24.6	22.5	22.9	23
NEP(measured)	5.8	0.0	#VALUE!	5.3	5.5	5.8	5.5	5.6	6.2	13.3	5.8	6.0	5.5	5.5	5.8
Vn(measured) a	27.7	0	33.8	26.6	30.3	30.7	29.7	33.1	26.9	568	34.5	29.4	27.8	28.5	27.6
NEP(measured)	5.7	0.0	#VALUE!	6.0	6.6	6.9	6.5	7.7	6.5	138.4	8.9	7.2	6.8	6.8	6.9

PRELIMINARY

Symbol	Value	Value	Value	Value	Value	Value	Value	Value	Value	Value	Value	Value	Value	Value	Value
T0															
Vn															
Q															
NEP_{photon}															
Vbias															
	H4	J4	E3	F4	G4	H5	E4	J5	F5	D11	A10	E10	C10	B10	D10
Pthermal	4.517	4.513	4.483	4.646	4.655	4.476	4.542	4.521	4.617	4.426	4.326	4.737	4.555	4.414	4.293
Pelec+Q	4.517	4.513	4.483	4.646	4.655	4.476	4.542	4.521	4.617	4.426	4.326	4.737	4.555	4.414	4.293
Tbolo	0.35907	0.36126	0.36215	0.36473	0.36214	0.35895	0.35977	0.36041	0.36419	0.37274	0.37099	0.37458	0.37235	0.36653	0.36932
T/T0	1.197	1.204	1.207	1.216	1.207	1.197	1.199	1.201	1.214	1.242	1.237	1.249	1.241	1.222	1.231
Rbolo	4.23E+06	4.21E+06	4.17E+06	4.44E+06	4.35E+06	4.20E+06	4.21E+06	4.14E+06	4.19E+06	4.27E+06	4.11E+06	4.69E+06	4.44E+06	4.13E+06	3.93E+06
Vbolo	4.37	4.36	4.32	4.54	4.50	4.33	4.37	4.33	4.40	4.35	4.22	4.71	4.50	4.27	4.11
Ibolo	1.03	1.04	1.04	1.02	1.03	1.03	1.04	1.04	1.05	1.02	1.03	1.01	1.01	1.03	1.04
A	-5.41	-5.36	-5.36	-5.32	-5.37	-5.37	-5.41	-5.41	-5.39	-5.16	-5.32	-5.31	-5.31	-5.33	-5.32
C	0.63	0.75	0.59	0.80	0.86	0.57	0.60	0.70	0.64	4.73	4.36	0.47	0.51	0.52	0.60
G	87.0	84.2	82.8	82.7	85.9	86.6	86.9	85.6	83.0	71.5	71.4	74.7	74.0	77.1	72.4
Z/R	0.122	0.114	0.110	0.100	0.109	0.128	0.120	0.115	0.097	0.077	0.070	0.053	0.065	0.091	0.079
τ	4.946	6.095	4.842	6.558	6.853	4.532	4.739	5.586	5.240	43.985	40.102	4.195	4.596	4.472	5.457
Sdc	4.11E+08	4.16E+08	4.17E+08	4.28E+08	4.18E+08	4.09E+08	4.11E+08	4.11E+08	4.19E+08	4.45E+08	4.45E+08	4.64E+08	4.54E+08	4.30E+08	4.33E+08
$NEP_{johnson}$	1.210	1.194	1.181	1.181	1.201	1.219	1.208	1.196	1.170	1.114	1.084	1.100	1.102	1.135	1.095
NEP_{phonon}	2.168	2.136	2.119	2.123	2.158	2.160	2.165	2.151	2.124	1.987	1.981	2.036	2.020	2.050	1.991
NEP_{load}	0.123	0.114	0.108	0.101	0.112	0.128	0.120	0.114	0.096	0.073	0.064	0.053	0.063	0.086	0.070
NEP_{amp}	2.431	2.406	2.397	2.335	2.391	2.448	2.434	2.432	2.385	2.249	2.245	2.155	2.205	2.327	2.310
NEP_{det}	4.413	4.361	4.335	4.269	4.360	4.433	4.413	4.398	4.318	4.069	4.045	3.983	4.029	4.198	4.129
DQE	0.000	0.000	0.000	0.000	0.000	0.000	0.000	0.000	0.000	0.000	0.000	0.000	0.000	0.000	0.000
Vn(det)	18.2	18.1	18.1	18.3	18.2	18.1	18.1	18.1	18.1	18.1	18.0	18.5	18.3	18.0	17.9
Vn(total)	18.2	18.1	18.1	18.3	18.2	18.1	18.1	18.1	18.1	18.1	18.0	18.5	18.3	18.0	17.9
Vn(measured) a	19.0	21.5	20.1	19.9	20.8	21.9	21.1	18.6	17.9	24.1	19.2	20.1	20.9	18.6	17.6
NEP(measured)	4.62	5.17	4.82	4.65	4.97	5.36	5.13	4.52	4.27	5.42	4.31	4.33	4.61	4.33	4.07
Vn(measured) a	31.7	30.9	28.6	31.4	32.4	29.3	26.1	31.8	27.5	23.4	24.8	28.2	27.8	28.2	28.4
NEP(measured)	7.71	7.44	6.86	7.33	7.75	7.17	6.35	7.73	6.56	5.26	5.57	6.08	6.13	6.56	6.56
Vn(measured) a	23.4	28.5	23.8	23.7	25.9	24.2	24.3	24.5	21.3	25.6	21.8	23.7	24.3	21.9	21.5
NEP(measured)	5.7	6.9	5.7	5.5	6.2	5.9	5.9	6.0	5.1	5.8	4.9	5.1	5.4	5.1	5.0
Vn(measured) a	31.5	30.9	28.8	29.6	30.8	30.3	30.3	33.2	25.5	26.1	25.8	28	29.8	27.5	30.8
NEP(measured)	7.7	7.4	6.9	6.9	7.4	7.4	7.4	8.1	6.1	5.9	5.8	6.0	6.6	6.4	7.1

PRELIMINARY

Symbol	Value	Value	Value	Value	Value	Value	Value	Value	Value	Value	Value	Value	Value	Value	Value
T0															
Vn															
Q															
NEP_{photon}															
Vbias															
	A9	E9	C9	B9	D9	A8	C8	E8	D8	B8	C7	E7	A7	D7	B7
Pthermal	4.499	#VALUE!	4.470	4.454	4.405	4.459	4.273	4.571	4.931	4.538	4.594	4.464	4.480	4.314	4.461
Pelec+Q	4.499	#VALUE!	4.470	4.454	4.405	4.459	4.273	4.571	4.931	4.538	4.594	4.464	4.480	4.314	4.461
Tbolo	0.37245	#VALUE!	0.35963	0.36055	0.36055	0.36156	0.35869	0.36239	0.36305	0.36130	0.36310	0.36121	0.36147	0.35875	0.36155
T/T0	1.242	#VALUE!	1.199	1.202	1.202	1.205	1.196	1.208	1.210	1.204	1.210	1.204	1.205	1.196	1.205
Rbolo	4.23E+06	#VALUE!	4.19E+06	4.22E+06	4.15E+06	4.14E+06	3.89E+06	4.38E+06	5.00E+06	4.30E+06	4.41E+06	4.17E+06	4.19E+06	3.98E+06	4.19E+06
Vbolo	4.36	#VALUE!	4.33	4.33	4.27	4.29	4.08	4.47	4.97	4.42	4.50	4.31	4.33	4.15	4.32
Ibolo	1.03	#VALUE!	1.03	1.03	1.03	1.04	1.05	1.02	0.99	1.03	1.02	1.03	1.03	1.04	1.03
A	-5.29	#VALUE!	-5.36	-5.40	-5.35	-5.33	-5.39	-5.39	-5.38	-5.35	-5.35	-5.38	-5.38	-5.39	-5.38
C	0.52	#VALUE!	0.68	0.56	0.49	0.68	0.90	0.50	0.51	0.56	0.56	0.54	0.65	0.54	0.63
G	72.8	#VALUE!	86.0	84.4	83.4	83.3	83.2	84.4	90.2	84.9	84.0	83.9	83.7	84.0	83.3
Z/R	0.065	#VALUE!	0.127	0.117	0.122	0.118	0.128	0.108	0.105	0.117	0.108	0.115	0.113	0.130	0.113
τ	4.710	#VALUE!	5.433	4.546	4.027	5.593	7.311	4.024	3.937	4.528	4.536	4.404	5.292	4.360	5.103
Sdc	4.45E+08	#VALUE!	4.10E+08	4.17E+08	4.13E+08	4.12E+08	4.04E+08	4.24E+08	4.37E+08	4.17E+08	4.25E+08	4.15E+08	4.17E+08	4.05E+08	4.18E+08
$NEP_{johnson}$	1.096	#VALUE!	1.216	1.191	1.196	1.196	1.190	1.187	1.226	1.203	1.192	1.190	1.186	1.200	1.185
NEP_{phonon}	2.005	#VALUE!	2.150	2.133	2.122	2.121	2.115	2.137	2.211	2.143	2.133	2.127	2.127	2.124	2.122
NEP_{load}	0.061	#VALUE!	0.127	0.115	0.119	0.116	0.121	0.109	0.117	0.118	0.110	0.113	0.111	0.124	0.111
NEP_{amp}	2.245	#VALUE!	2.442	2.398	2.420	2.426	2.477	2.356	2.289	2.397	2.355	2.408	2.399	2.466	2.394
NEP_{det}	4.064	#VALUE!	4.420	4.349	4.371	4.377	4.428	4.303	4.289	4.360	4.303	4.357	4.345	4.426	4.335
DQE	0.000	#VALUE!	0.000	0.000	0.000	0.000	0.000	0.000	0.000	0.000	0.000	0.000	0.000	0.000	0.000
Vn(det)	18.1	#VALUE!	18.1	18.1	18.1	18.0	17.9	18.3	18.7	18.2	18.3	18.1	18.1	17.9	18.1
Vn(total)	18.1	#VALUE!	18.1	18.1	18.1	18.0	17.9	18.3	18.7	18.2	18.3	18.1	18.1	17.9	18.1
Vn(measured) a	19.8	8.0	18.7	19.2	18.7	19.9	19.0	19.4	20.0	19.8	17.9	21.3	19.5	19.3	19.6
NEP(measured)	4.45	#VALUE!	4.57	4.60	4.53	4.83	4.71	4.57	4.58	4.75	4.22	5.13	4.68	4.76	4.69
Vn(measured) a	29.3	8.9	28.9	28.7	29.5	28.5	28.5	28.3	29.8	28.9	29.3	29.8	28.8	26.3	28.3
NEP(measured)	6.58	#VALUE!	7.06	6.88	7.14	6.91	7.06	6.67	6.82	6.93	6.90	7.18	6.91	6.49	6.78
Vn(measured) a	23.6	7.82	21.5	23.1	22.4	22.5	22.6	22.5	23.3	22.1	22.4	23.2	23.2	21.3	22.8
NEP(measured)	5.3	#VALUE!	5.2	5.5	5.4	5.5	5.6	5.3	5.3	5.3	5.3	5.6	5.6	5.3	5.5
Vn(measured) a	27.1	8.18	28	27.2	28.1	30.7	29.6	27.2	27.9	29.4	28.3	51.6	30	24.7	29.5
NEP(measured)	6.1	#VALUE!	6.8	6.5	6.8	7.4	7.3	6.4	6.4	7.0	6.7	12.4	7.2	6.1	7.1

PRELIMINARY

Symbol	Value	Value	Value	Value	Value	Value	Value	Value	Value	Value	Value	Value	Value	Value	Value
T0															
Vn															
Q															
NEP_{photon}															
Vbias															
	C6	E6	A6	G5	H6	J6	F6	G6	H7	F7	J7	G7	H8	F8	G8
Pthermal	4.710	4.131	4.461	4.439	4.497	4.292	4.639	4.510	4.392	4.522	#VALUE!	4.503	4.634	4.839	4.589
Pelec+Q	4.710	4.131	4.461	4.439	4.497	4.292	4.639	4.510	4.392	4.522	#VALUE!	4.503	4.634	4.839	4.589
Tbolo	0.36465	0.35707	0.35957	0.36023	0.36027	0.35829	0.36264	0.36146	0.35962	0.36101	#VALUE!	0.37333	0.37301	0.37705	0.37533
T/T0	1.215	1.190	1.199	1.201	1.201	1.194	1.209	1.205	1.199	1.203	#VALUE!	1.244	1.243	1.257	1.251
Rbolo	4.64E+06	3.72E+06	4.21E+06	3.94E+06	4.08E+06	3.78E+06	4.18E+06	4.02E+06	3.93E+06	4.06E+06	#VALUE!	4.09E+06	4.20E+06	4.54E+06	4.23E+06
Vbolo	4.67	3.92	4.33	4.18	4.28	4.03	4.40	4.26	4.16	4.29	#VALUE!	4.29	4.41	4.69	4.40
Ibolo	1.01	1.05	1.03	1.06	1.05	1.07	1.05	1.06	1.06	1.06	#VALUE!	1.05	1.05	1.03	1.04
A	-5.33	-5.34	-5.35	-5.40	-5.41	-5.40	-5.31	-5.40	-5.35	-5.39	#VALUE!	-5.27	-5.28	-5.23	-5.24
C	0.47	0.69	0.60	0.70	0.63	0.74	0.63	0.59	0.63	0.55	#VALUE!	0.53	0.53	0.42	0.57
G	84.3	82.5	85.5	84.4	85.4	83.9	85.3	84.4	84.3	85.2	#VALUE!	72.1	74.5	74.2	72.2
Z/R	0.101	0.144	0.126	0.119	0.117	0.130	0.113	0.112	0.127	0.115	#VALUE!	0.063	0.063	0.050	0.060
τ	3.799	5.661	4.833	5.617	5.044	5.951	5.039	4.771	5.095	4.356	#VALUE!	4.860	4.695	3.724	5.178
Sdc	4.33E+08	3.94E+08	4.11E+08	4.04E+08	4.08E+08	3.96E+08	4.09E+08	4.08E+08	4.01E+08	4.07E+08	#VALUE!	4.39E+08	4.38E+08	4.54E+08	4.44E+08
$NEP_{johnson}$	1.193	1.205	1.213	1.193	1.197	1.196	1.210	1.187	1.205	1.196	#VALUE!	1.094	1.109	1.110	1.099
NEP_{phonon}	2.140	2.102	2.148	2.134	2.147	2.125	2.149	2.135	2.131	2.144	#VALUE!	1.998	2.030	2.035	1.999
NEP_{load}	0.106	0.132	0.126	0.114	0.115	0.122	0.115	0.109	0.123	0.113	#VALUE!	0.059	0.061	0.051	0.057
NEP_{amp}	2.307	2.541	2.433	2.478	2.450	2.524	2.448	2.452	2.496	2.454	#VALUE!	2.276	2.281	2.205	2.251
NEP_{det}	4.254	4.502	4.408	4.438	4.416	4.488	4.422	4.408	4.465	4.419	#VALUE!	4.093	4.122	4.041	4.069
DQE	0.000	0.000	0.000	0.000	0.000	0.000	0.000	0.000	0.000	0.000	#VALUE!	0.000	0.000	0.000	0.000
Vn(det)	18.4	17.7	18.1	17.9	18.0	17.8	18.1	18.0	17.9	18.0	#VALUE!	18.0	18.1	18.3	18.1
Vn(total)	18.4	17.7	18.1	17.9	18.0	17.8	18.1	18.0	17.9	18.0	#VALUE!	18.0	18.1	18.3	18.1
Vn(measured) a	20.3	18.1	20.4	19.5	19.3	18.5	21.1	33.4	27.2	40.7	21400.0	43.5	24.5	35.7	21.3
NEP(measured)	4.68	4.60	4.96	4.83	4.73	4.67	5.16	8.19	6.79	9.99	#VALUE!	9.90	5.59	7.87	4.80
Vn(measured) a	37.1	26	29.2	27.8	29.3	28.7	27.9	79	57	96.2	64700	109	56.1	82.1	35.6
NEP(measured)	8.56	6.61	7.11	6.89	7.18	7.24	6.83	19.37	14.23	23.61	#VALUE!	24.81	12.80	18.10	8.01
Vn(measured) a	25.1	20.5	22.5	22.4	22	21.7	23.2	25.2	24.6	27.1	10700	29.3	22.7	28.4	25.7
NEP(measured)	5.8	5.2	5.5	5.5	5.4	5.5	5.7	6.2	6.1	6.7	#VALUE!	6.7	5.2	6.3	5.8
Vn(measured) a	29.4	25.2	27.6	25.4	26.9	26.7	28.5	41.1	35.6	47.7	31400	51.1	35.1	44.7	37
NEP(measured)	6.8	6.4	6.7	6.3	6.6	6.7	7.0	10.1	8.9	11.7	#VALUE!	11.6	8.0	9.9	8.3

PRELIMINARY

Symbol	Value	Value	Value	Value	Value	Value	Value	Value	Value	Value	Value	Value
T0												
Vn												
Q												
NEP_{photon}												
Vbias												
	J8	F9	H9	G9	J9	F10	H10	G10	F11	J10	H11	G11
Pthermal	4.721	4.711	4.628	#VALUE!	4.557	4.376	4.568	4.544	4.466	4.430	4.354	4.498
Pelec+Q	4.721	4.711	4.628	#VALUE!	4.557	4.376	4.568	4.544	4.466	4.430	4.354	4.498
Tbolo	0.37410	0.37542	0.37322	#VALUE!	0.36049	0.35893	0.36053	0.35941	0.35811	0.35947	0.35776	0.35817
T/T0	1.247	1.251	1.244	#VALUE!	1.202	1.196	1.202	1.198	1.194	1.198	1.193	1.194
Rbolo	4.28E+06	4.27E+06	4.28E+06	#VALUE!	4.07E+06	3.83E+06	4.14E+06	4.08E+06	3.97E+06	3.98E+06	3.70E+06	4.09E+06
Vbolo	4.49	4.49	4.45	#VALUE!	4.30	4.09	4.35	4.31	4.21	4.20	4.01	4.29
Ibolo	1.05	1.05	1.04	#VALUE!	1.06	1.07	1.05	1.06	1.06	1.05	1.09	1.05
A	-5.30	-5.28	-5.32	#VALUE!	-5.37	-5.36	-5.37	-5.38	-5.40	-5.40	-5.36	-5.31
C	0.57	0.48	0.50	#VALUE!	0.67	0.63	0.60	0.55	0.71	0.70	0.62	0.62
G	74.8	73.8	74.3	#VALUE!	86.2	84.9	86.5	87.5	87.6	85.2	85.8	87.9
Z/R	0.056	0.053	0.060	#VALUE!	0.119	0.130	0.120	0.125	0.131	0.123	0.137	0.137
τ	5.020	4.309	4.473	#VALUE!	5.294	5.070	4.776	4.335	5.525	5.621	4.944	4.848
Sdc	4.43E+08	4.45E+08	4.45E+08	#VALUE!	4.04E+08	3.94E+08	4.06E+08	4.02E+08	3.97E+08	4.03E+08	3.86E+08	3.98E+08
$NEP_{johnson}$	1.104	1.099	1.100	#VALUE!	1.209	1.210	1.213	1.221	1.224	1.201	1.221	1.242
NEP_{phonon}	2.037	2.023	2.026	#VALUE!	2.158	2.137	2.160	2.170	2.170	2.142	2.147	2.176
NEP_{load}	0.054	0.052	0.057	#VALUE!	0.118	0.125	0.120	0.125	0.129	0.120	0.130	0.138
NEP_{amp}	2.259	2.250	2.248	#VALUE!	2.476	2.536	2.461	2.489	2.521	2.479	2.594	2.516
NEP_{det}	4.099	4.079	4.079	#VALUE!	4.458	4.515	4.444	4.486	4.522	4.449	4.592	4.530
DQE	0.000	0.000	0.000	#VALUE!	0.000	0.000	0.000	0.000	0.000	0.000	0.000	0.000
Vn(det)	18.1	18.1	18.1	#VALUE!	18.0	17.8	18.1	18.0	17.9	17.9	17.7	18.0
Vn(total)	18.1	18.1	18.1	#VALUE!	18.0	17.8	18.1	18.0	17.9	17.9	17.7	18.0
Vn(measured) a	21.1	20.0	20.4	7.7	20.3	19.7	19.1	21.0	18.4	19.6	18.8	20.4
NEP(measured)	4.77	4.50	4.59	#VALUE!	5.03	5.00	4.70	5.23	4.64	4.86	4.88	5.13
Vn(measured) a	37	30.7	30.3	8.76	27.3	27.4	28.8	26.6	27.4	28	26.1	31.5
NEP(measured)	8.36	6.91	6.81	#VALUE!	6.76	6.95	7.09	6.62	6.91	6.94	6.77	7.92
Vn(measured) a	25.2	21.6	24.1	7.13	23.6	23.2	23.1	23.5	21.9	22.4	20.9	22.3
NEP(measured)	5.7	4.9	5.4	#VALUE!	5.8	5.9	5.7	5.9	5.5	5.6	5.4	5.6
Vn(measured) a	32.6	28.7	30	8.11	29.5	26.5	27.9	27.4	25.7	26.1	25.3	26.6
NEP(measured)	7.4	6.5	6.7	#VALUE!	7.3	6.7	6.9	6.8	6.5	6.5	6.6	6.7

PRELIMINARY

Symbol	Parameter	Equation (or Comments)
T0		
Vn		
Q		
NEP_{photon}		
Vbias		
Pthermal	Power as function of Temperature	$P_{thermal} = [G300/(1+\beta)][T/0.3]^{\beta}T$ evaluated from To to Tb
Pelec+Q	Electrical + Absorbed Power	$P_e + Q = [V_{bias}/(2R_L + R_B)]^2R_B + Q$
Tbolo	Bolometer Temperature	Solve for Tb using Newtonian recursion such that $P_{thermal} = P_e + Q$
T/T0		T/To = Tbolo/To
Rbolo	Bolometer Resistance	$Rbolo = (Ro)\exp[(\Delta/Tb)^{1/2}]$
Vbolo	Voltage across Bolometer	$Vbolo = [Vbias/(2R_L + R_B)]R_B$
Ibolo	Current through Bolometer	$Ibolo = Vbias/(2R_L + R_B)$
A		$A = (T/R)(dR/dT) = -(1/2)[(\Delta/Tb)^{1/2}]$
C	Dynamic Heat Capacity	$C = C300[(T/0.3)^{\gamma}]$
G	Dynamic Thermal Conductance	$G = G300[(T/0.3)^{\beta}]$
Z/R		$Z/R = (I/V)(dV/dI) = [-1 - GTb/(P_eA)] / [1 - GTb/(P_eA)]$
τ	Electrical Time Constant	$\tau = [C/2G][(Z/R + 1)(1 + 2R_L/R_B)] / [Z/R + 2R_L/R_B]$
Sdc	Electrical Responsivity at 0 Hz	$Sdc = (1/2)[R_B/P_e]^{1/2}[1 - Z/R] / [1 + (Z/R)(R_B/2R_L)$
$NEP_{johnson}$	Johnson Noise Prior to Demodulation	$NEP_{johnson} = [(4k(Tb)^3G^2)/(P_eA^2)]^{1/2}$
NEP_{phonon}	Phonon Noise Prior to Demodulation	$=\{[(4kTo^2G)(\beta+1)((T/To)^{2\beta+3}-1)]/[(2\beta+3)(T/To)^{\beta}((T/To)^{\beta+1}-1)]\}^{1/2}$
NEP_{load}	Johnson Noise from R_L Prior to Demod.	$NEP_{load} = [4kTo/2R_L]^{1/2}\,\lvert 2(Z/R)R_B Ibolo/[(Z/R) - 1]\rvert$
NEP_{amp}	Amplifier Noise Prior to Demodulation	$NEP_{amp} = Vn / Sdc$
NEP_{det}	Detector Noise after Demodulation	$NEP_{det} = [2NEP_{john}^2+NEP_{phon}^2+2NEP_{load}^2+2NEP_{amp}^2]^{1/2}$
DQE	BLIP Figure-of-Merit for Detector	$DQE = NEP_{photon}^2 / (NEP_{photon}^2 + NEP_{det}^2)$
Vn(det)	Voltage Noise of Detector After Demod.	$Vn(det) = NEP_{det}Sdc$
Vn(total)	Total Noise after Demodulation	$Vn(total) = [NEP_{det}^2 + NEP_{photon}^2]^{1/2}Sdc$
Vn(measured) a		
NEP(measured		
Vn(measured) a		
NEP(measured		
Vn(measured) a		
NEP(measured		
Vn(measured) a		
NEP(measured		

PRELIMINARY

Symbol	Units	Value	Value	Value	Value	Value	Value	Value	Value	Value	Value	Value	Value	Value	Value	Value
T0	K	0.3	Base Temperature													
Vn	nV/rtHz	10	Amplifier Voltage Noise													
Q	pW	10.8	Absorbed Power Onto Bolometer													
NEP_{photon}	1e-17 W/rtHz	13.60	Noise in Absorbed Optical Power													
Vbias	mV	32	Bias Across Bolometer & Load Resistors													
			Detector ID													
		Target	**D6**	**B6**	**C5**	**A5**	**E5**	**B5**	**D5**	**C4**	**A4**	**D4**	**B4**	**C3**	**B3**	**A3**
Pthermal	pW	14.888	14.903	14.360	14.431	14.715	14.795	15.251	14.724	14.360	15.156	14.321	14.852	15.918	14.693	14.747
Pelec+Q	pW	14.888	14.903	14.360	14.431	14.716	14.796	15.251	14.724	14.360	15.156	14.321	14.852	15.919	14.693	14.747
Tbolo	K	0.48603	0.45679	0.45510	0.45606	0.45900	0.45849	0.46792	0.45800	0.45133	0.45804	0.45639	0.45757	0.46542	0.45877	0.45667
T/T0		1.620	1.523	1.517	1.520	1.530	1.528	1.560	1.527	1.504	1.527	1.521	1.525	1.551	1.529	1.522
Rbolo	Ω	1.92E+06	1.24E+06	1.06E+06	1.07E+06	1.17E+06	1.20E+06	1.34E+06	1.18E+06	1.05E+06	1.32E+06	1.05E+06	1.22E+06	1.60E+06	1.17E+06	1.18E+06
Vbolo	mV	2.80	2.26	1.95	1.97	2.14	2.19	2.45	2.15	1.94	2.40	1.92	2.23	2.86	2.13	2.16
Ibolo	nA	1.46	1.82	1.83	1.84	1.83	1.82	1.82	1.83	1.84	1.81	1.83	1.82	1.79	1.83	1.83
A		-4.64	-4.73	-4.76	-4.75	-4.77	-4.78	-4.80	-4.77	-4.76	-4.74	-4.74	-4.69	-4.69	-4.75	-4.75
C	pJ/K	1.62	0.78	0.82	0.85	0.78	0.93	1.75	0.77	0.84	0.90	0.85	0.80	0.68	0.98	0.99
G	pW/K	109.3	126.7	123.4	123.1	123.8	124.7	123.9	124.6	124.7	127.7	120.9	124.6	128.5	123.7	125.4
Z/R		0.474	0.498	0.537	0.529	0.505	0.499	0.461	0.506	0.537	0.478	0.536	0.500	0.427	0.509	0.507
τ	ms	4.000	4.760	5.254	5.460	4.917	5.814	10.784	4.824	5.327	5.412	5.530	4.982	3.984	6.148	6.174
Sdc	V/K	1.72E+08	1.33E+08	1.22E+08	1.23E+08	1.30E+08	1.33E+08	1.43E+08	1.30E+08	1.22E+08	1.39E+08	1.22E+08	1.32E+08	1.54E+08	1.30E+08	1.30E+08
$NEP_{johnson}$	1e-17 W/rtHz	2.935	3.035	3.136	3.108	3.032	3.011	2.907	3.038	3.129	2.971	3.114	3.037	2.858	3.051	3.045
NEP_{phonon}	1e-17 W/rtHz	2.830	2.925	2.879	2.880	2.899	2.908	2.928	2.904	2.887	2.943	2.862	2.910	2.985	2.897	2.910
NEP_{load}	1e-17 W/rtHz	0.459	0.450	0.453	0.447	0.441	0.440	0.423	0.443	0.453	0.443	0.445	0.448	0.431	0.444	0.446
NEP_{amp}	1e-17 W/rtHz	5.804	7.516	8.170	8.097	7.667	7.544	7.011	7.665	8.217	7.217	8.169	7.556	6.505	7.710	7.683
NEP_{det}	1e-17 W/rtHz	9.645	11.847	12.723	12.615	12.030	11.866	11.142	12.032	12.781	11.440	12.706	11.895	10.500	12.095	12.061
DQE		0.665	0.569	0.533	0.538	0.561	0.568	0.598	0.561	0.531	0.586	0.534	0.567	0.627	0.558	0.560
Vn(det)	nV/rtHz	16.6	12.8	15.6	15.6	15.7	15.7	15.9	15.7	15.6	15.9	15.6	15.7	16.1	15.7	15.7
Vn(total)	nV/rtHz	28.7	12.8	22.8	22.9	23.7	23.9	25.1	23.7	22.7	24.6	22.8	23.9	26.4	23.6	23.7
Measured																
Q_incident	1.16E-11															
NEP_photon	9.69E-17															
Q_absorbed			N/M	N/M	7.137E-12	N/A	8.301E-12	8.661E-12	7.658E-12	7.517E-12	8.863E-12	7.943E-12	7.334E-12	7.181E-12	7.189E-12	8.162E-12
NEP_photon			N/M	N/M	7.593E-17	N/A	8.189E-17	8.365E-17	7.866E-17	7.793E-17	8.462E-17	8.011E-17	7.698E-17	7.617E-17	7.621E-17	8.121E-17
Vn(total, gain = 57300)			0.0012333	0.0020814	0.0013961	N/A	0.0016456	0.0015933	0.001589	0.0014673	0.0015614	0.0017511	0.0016302	0.0019089	0.0016721	0.0018064
Vn(total)		2.8585E-08	1.52195E-08	3.632E-08	2.436E-08	N/A	2.872E-08	2.781E-08	2.773E-08	2.561E-08	2.725E-08	3.056E-08	2.845E-08	3.331E-08	2.918E-08	3.153E-08
Sdc			N/M	N/M	1.62E+08	N/A	1.81E+08	1.68E+08	1.69E+08	1.64E+08	1.75E+08	2.18E+08	1.78E+08	2.05E+08	1.72E+08	2.03E+08
NEP(total)					1.501E-16	N/A	1.588E-16	1.656E-16	1.644E-16	1.559E-16	1.555E-16	1.399E-16	1.603E-16	1.625E-16	1.698E-16	1.549E-16
DQE		0.25	N/M	N/M	0.26	N/A	0.27	0.26	0.23	0.25	0.30	0.33	0.23	0.22	0.20	0.27

PRELIMINARY

Symbol	Value	Value	Value	Value	Value	Value	Value	Value	Value	Value	Value	Value	Value	Value	Value	Value	Value
T0																	
Vn																	
Q																	
NEP_{photon}																	
Vbias																	
	A2	D3	C2	B2	D2	A1	C1	B1	DK1	D1	F12	J11	E12	H12	G12	F13	E13
Pthermal	14.537	14.590	14.488	14.498	14.915	14.755	14.447	14.477	14.574	14.655	14.650	14.562	14.906	14.710	14.508	14.997	14.989
Pelec+Q	14.537	14.590	14.489	14.499	14.916	14.756	14.448	14.477	14.575	14.656	14.650	14.562	14.906	14.710	14.508	14.997	14.989
Tbolo	0.45777	0.45621	0.48705	0.48714	0.48883	0.48914	0.48580	0.48546	0.48578	0.48546	0.45731	0.45376	0.45809	0.45556	0.45257	0.45170	0.46098
T/T0	1.526	1.521	1.624	1.624	1.629	1.630	1.619	1.618	1.619	1.618	1.524	1.513	1.527	1.519	1.509	1.506	1.537
Rbolo	1.11E+06	1.14E+06	1.10E+06	1.10E+06	1.25E+06	1.20E+06	1.09E+06	1.11E+06	1.15E+06	1.17E+06	1.11E+06	1.09E+06	1.20E+06	1.13E+06	1.07E+06	1.23E+06	1.23E+06
Vbolo	2.04	2.07	2.01	2.02	2.27	2.18	2.00	2.02	2.08	2.13	2.07	2.03	2.22	2.10	1.99	2.28	2.27
Ibolo	1.83	1.83	1.83	1.84	1.81	1.82	1.83	1.82	1.82	1.81	1.86	1.85	1.85	1.86	1.86	1.84	1.84
A	-4.79	-4.74	-4.61	-4.62	-4.68	-4.61	-4.64	-4.60	-4.62	-4.62	-4.72	-4.77	-4.80	-4.77	-4.76	-4.83	-4.73
C	0.87	0.82	0.73	0.71	0.85	0.79	0.72	0.84	1.82	0.90	0.98	0.77	0.79	0.76	0.79	0.77	0.69
G	123.1	124.0	107.0	107.4	109.1	106.5	107.4	107.3	107.5	108.7	124.2	125.7	126.7	125.7	126.0	130.8	125.0
Z/R	0.518	0.518	0.508	0.508	0.469	0.481	0.510	0.510	0.499	0.495	0.515	0.521	0.493	0.509	0.527	0.489	0.488
τ	5.522	5.186	5.332	5.145	5.974	5.677	5.238	6.119	13.089	6.384	6.192	4.829	4.852	4.738	4.956	4.541	4.265
Sdc	1.27E+08	1.27E+08	1.30E+08	1.30E+08	1.41E+08	1.38E+08	1.30E+08	1.30E+08	1.33E+08	1.34E+08	1.26E+08	1.25E+08	1.32E+08	1.28E+08	1.23E+08	1.34E+08	1.34E+08
$NEP_{johnson}$	3.060	3.074	3.050	3.054	2.918	2.951	3.047	3.057	3.013	3.012	3.082	3.083	3.000	3.044	3.111	2.980	2.999
NEP_{phonon}	2.886	2.894	2.797	2.801	2.833	2.807	2.797	2.797	2.803	2.815	2.898	2.902	2.925	2.909	2.901	2.953	2.920
NEP_{load}	0.441	0.448	0.418	0.418	0.404	0.406	0.417	0.421	0.416	0.419	0.446	0.447	0.438	0.442	0.451	0.441	0.438
NEP_{amp}	7.865	7.847	7.706	7.708	7.082	7.243	7.709	7.695	7.504	7.436	7.955	8.018	7.558	7.832	8.154	7.485	7.468
NEP_{det}	12.294	12.282	12.065	12.069	11.212	11.426	12.066	12.054	11.789	11.705	12.424	12.506	11.882	12.250	12.694	11.786	11.766
DQE	0.550	0.551	0.560	0.559	0.595	0.586	0.560	0.560	0.571	0.574	0.545	0.542	0.567	0.552	0.534	0.571	0.572
Vn(det)	15.6	15.7	15.7	15.7	15.8	15.8	15.7	15.7	15.7	15.7	15.6	15.6	15.7	15.6	15.6	15.7	15.8
Vn(total)	23.3	23.4	23.6	23.6	24.9	24.5	23.6	23.6	24.0	24.1	23.2	23.0	23.9	23.4	22.8	24.0	24.1
Measured																	
Q_incident																	
NEP_photon																	
Q_absorbed	8.563E-12	8.225E-12	7.597E-12	7.327E-12	N/A	9.41581E-12	8.363E-12	9.189E-12	8.129E-12	N/A	7.548E-12	8.448E-12	9.01E-12	8.04E-12	8.283E-12	7.896E-12	7.817E-12
NEP_photon	8.318E-17	8.152E-17	7.834E-17	7.694E-17	N/A	8.72212E-17	8.22E-17	8.616E-17	8.104E-17	N/A	7.809E-17	8.262E-17	8.532E-17	8.06E-17	8.181E-17	7.987E-17	7.947E-17
Vn(total, gain =	0.0022124	0.0018438	0.0030675	0.0015785	N/A	0.002182946	0.0024331	0.0015758	0.0015971	0.0015366	0.0024331	0.0024331	0.0024331	0.0024331	0.0024331	0.0024331	0.0024331
Vn(total)	3.861E-08	3.218E-08	5.353E-08	2.755E-08	N/A	3.80968E-08	4.246E-08	2.75E-08	2.787E-08	2.682E-08	4.246E-08	4.246E-08	4.246E-08	4.246E-08	4.246E-08	4.246E-08	4.246E-08
Sdc	1.74E+08	2.00E+08	1.68E+08	1.74E+08	N/M	2.34E+08	1.75E+08	1.67E+08	1.61E+08	N/M	1.75E+08	1.75E+08	1.75E+08	1.75E+08	1.75E+08	1.75E+08	1.75E+08
NEP(total)	2.22E-16	1.61E-16	3.186E-16	1.581E-16	N/M	1.63006E-16	2.424E-16	1.645E-16	1.735E-16	N/M	2.424E-16	2.424E-16	2.424E-16	2.424E-16	2.424E-16	2.424E-16	2.424E-16
DQE	0.14	0.26	0.06	0.24	N/M	0.29	0.11	0.27	0.22	N/M	0.10	0.12	0.12	0.11	0.11	0.11	0.11

PRELIMINARY

Symbol	Value	Value	Value	Value	Value	Value	Value	Value	Value	Value	Value	Value	Value	Value	Value	Value	Value
T0																	
Vn																	
Q																	
NEP_{photon}																	
Vbias																	
	J12	H13	G13	F14	E14	J13	H14	G14	J14	F15	H15	J15	G15	H16	DK2	F16	E15
Pthermal	14.938	15.134	14.864	15.025	14.973	14.647	14.622	14.789	14.938	14.897	14.818	14.561	14.859	#VALUE!	14.662	14.750	14.697
Pelec+Q	14.938	15.135	14.864	15.025	14.974	14.647	14.622	14.789	14.939	14.898	14.818	14.561	14.859	#VALUE!	14.663	14.751	14.697
Tbolo	0.45779	0.45495	0.45462	0.45862	0.46148	0.45419	0.45333	0.45498	0.45926	0.45779	0.45633	0.45681	0.45945	#VALUE!	0.46105	0.46129	0.45967
T/T0	1.526	1.517	1.515	1.529	1.538	1.514	1.511	1.517	1.531	1.526	1.521	1.523	1.532	#VALUE!	1.537	1.538	1.532
Rbolo	1.23E+06	1.27E+06	1.20E+06	1.25E+06	1.25E+06	1.13E+06	1.11E+06	1.19E+06	1.23E+06	1.21E+06	1.19E+06	1.09E+06	1.19E+06	#VALUE!	1.14E+06	1.16E+06	1.13E+06
Vbolo	2.25	2.35	2.21	2.29	2.28	2.08	2.06	2.18	2.25	2.22	2.18	2.03	2.20	#VALUE!	2.10	2.14	2.10
Ibolo	1.84	1.85	1.84	1.84	1.83	1.85	1.85	1.83	1.84	1.84	1.84	1.85	1.85	#VALUE!	1.84	1.85	1.86
A	-4.73	-4.83	-4.79	-4.77	-4.79	-4.81	-4.75	-4.79	-4.79	-4.76	-4.79	-4.78	-4.75	#VALUE!	-4.75	-4.75	-4.76
C	0.67	0.73	0.70	0.72	0.81	0.91	0.83	0.75	0.80	0.74	0.83	0.72	0.69	#VALUE!	0.76	0.75	0.80
G	125.9	129.7	127.9	126.9	124.2	126.0	126.0	126.8	125.3	126.4	126.3	123.6	124.8	#VALUE!	122.0	123.1	123.2
Z/R	0.493	0.477	0.499	0.485	0.483	0.512	0.518	0.502	0.488	0.496	0.499	0.517	0.497	#VALUE!	0.508	0.503	0.506
τ	4.098	4.327	4.266	4.384	5.047	5.629	5.141	4.589	4.951	4.565	5.093	4.575	4.308	#VALUE!	4.857	4.705	5.061
Sdc	1.33E+08	1.37E+08	1.31E+08	1.35E+08	1.36E+08	1.28E+08	1.26E+08	1.31E+08	1.35E+08	1.32E+08	1.31E+08	1.26E+08	1.31E+08	#VALUE!	1.29E+08	1.30E+08	1.28E+08
$NEP_{johnson}$	3.009	2.944	3.019	2.985	2.956	3.041	3.079	3.020	2.974	3.017	3.014	3.059	3.017	#VALUE!	3.040	3.035	3.034
NEP_{phonon}	2.922	2.953	2.930	2.932	2.914	2.908	2.907	2.920	2.918	2.923	2.918	2.890	2.912	#VALUE!	2.886	2.897	2.895
NEP_{load}	0.443	0.434	0.444	0.438	0.430	0.442	0.449	0.443	0.434	0.442	0.440	0.440	0.439	#VALUE!	0.438	0.438	0.436
NEP_{amp}	7.509	7.322	7.622	7.424	7.338	7.829	7.960	7.628	7.431	7.575	7.622	7.945	7.616	#VALUE!	7.743	7.713	7.800
NEP_{det}	11.824	11.561	11.974	11.706	11.577	12.244	12.432	11.980	11.706	11.912	11.970	12.398	11.962	#VALUE!	12.128	12.090	12.201
DQE	0.570	0.581	0.563	0.574	0.580	0.552	0.545	0.563	0.574	0.566	0.564	0.546	0.564	#VALUE!	0.557	0.559	0.554
Vn(det)	15.7	15.8	15.7	15.8	15.8	15.6	15.6	15.7	15.8	15.7	15.7	15.6	15.7	#VALUE!	15.7	15.7	15.6
Vn(total)	24.0	24.4	23.8	24.2	24.3	23.4	23.1	23.8	24.1	23.9	23.8	23.2	23.8	#VALUE!	23.5	23.6	23.4
Measured																	
Q_incident																	
NEP_photon																	
Q_absorbed	8.293E-12	7.981E-12	8.005E-12	7.971E-12	8.044E-12	8.742E-12	9.763E-12	#VALUE!	5.983E-12	8.129E-12							
NEP_photon	8.186E-17	8.03E-17	8.042E-17	8.025E-17	8.062E-17	8.404E-17	8.881E-17	#VALUE!	6.953E-17	8.104E-17							
Vn(total, gain =	0.0024331	0.0024331	0.0024331	0.0024331	0.0024331	0.0024331	0.0024331	0.0024331	0.0024331	0.0024331							
Vn(total)	4.246E-08	4.246E-08	4.246E-08	4.246E-08	4.246E-08	4.246E-08	4.246E-08	4.246E-08	4.246E-08	4.246E-08							
Sdc	1.75E+08	1.75E+08	1.75E+08	1.75E+08	1.75E+08	1.75E+08	1.75E+08	1.75E+08	1.75E+08	1.75E+08							
NEP(total)	2.424E-16	2.424E-16	2.424E-16	2.424E-16	2.424E-16	2.424E-16	2.424E-16	2.424E-16	2.424E-16	2.424E-16							
DQE	0.11	0.11	0.11	0.11	0.11	0.12	0.13	#VALUE!	0.08	0.11							

PRELIMINARY

Symbol	Value	Value	Value	Value	Value	Value	Value	Value	Value	Value	Value	Value	Value	Value	Value	Value	Value
T0																	
Vn																	
Q																	
NEP_{photon}																	
Vbias																	
	R1	D16	T1	B16	C15	A15	D15	B15	C14	D14	A14	A13	B14	C13	B13	D13	A12
Pthermal	#VALUE!	14.619	#VALUE!	14.512	14.613	14.654	14.326	14.604	14.659	15.724	14.643	14.461	14.547	14.613	14.615	14.927	14.661
Pelec+Q	#VALUE!	14.619	#VALUE!	14.513	14.614	14.654	14.326	14.604	14.659	15.724	14.643	14.461	14.547	14.613	14.615	14.927	14.661
Tbolo	#VALUE!	0.46117	#VALUE!	0.45703	0.45567	0.45591	0.45208	0.45587	0.45499	0.46288	0.45705	0.46002	0.45622	0.45372	0.45686	0.45076	0.46012
T/T0	#VALUE!	1.537	#VALUE!	1.523	1.519	1.520	1.507	1.520	1.517	1.543	1.523	1.533	1.521	1.512	1.523	1.503	1.534
Rbolo	#VALUE!	1.19E+06	#VALUE!	1.15E+06	1.20E+06	1.20E+06	1.09E+06	1.19E+06	1.19E+06	1.60E+06	1.19E+06	1.13E+06	1.17E+06	1.19E+06	1.18E+06	1.30E+06	1.20E+06
Vbolo	#VALUE!	2.13	#VALUE!	2.07	2.14	2.15	1.96	2.13	2.14	2.81	2.14	2.04	2.09	2.13	2.12	2.31	2.15
Ibolo	#VALUE!	1.79	#VALUE!	1.79	1.79	1.79	1.80	1.79	1.80	1.75	1.79	1.80	1.79	1.79	1.80	1.78	1.79
A	#VALUE!	-4.73	#VALUE!	-4.78	-4.79	-4.79	-4.79	-4.78	-4.81	-4.74	-4.76	-4.74	-4.76	-4.76	-4.80	-4.78	-4.72
C	#VALUE!	0.67	#VALUE!	0.79	0.68	0.79	0.78	0.74	0.82	0.62	0.80	54.09	0.90	0.75	0.91	0.79	0.79
G	#VALUE!	121.1	#VALUE!	123.3	126.0	125.2	125.1	125.3	126.3	129.7	124.9	121.1	124.2	126.1	124.7	131.4	123.1
Z/R	#VALUE!	0.511	#VALUE!	0.521	0.518	0.511	0.540	0.517	0.512	0.440	0.515	0.525	0.522	0.518	0.514	0.500	0.513
τ	#VALUE!	4.340	#VALUE!	5.032	4.207	4.912	4.956	4.621	5.098	3.646	5.002	351.105	5.695	4.670	5.720	4.654	4.995
Sdc	#VALUE!	1.32E+08	#VALUE!	1.29E+08	1.30E+08	1.31E+08	1.23E+08	1.30E+08	1.31E+08	1.53E+08	1.30E+08	1.28E+08	1.29E+08	1.30E+08	1.30E+08	1.35E+08	1.31E+08
$NEP_{johnson}$	#VALUE!	3.046	#VALUE!	3.074	3.081	3.046	3.140	3.076	3.048	2.885	3.072	3.098	3.089	3.077	3.054	3.044	3.078
NEP_{phonon}	#VALUE!	2.878	#VALUE!	2.886	2.906	2.904	2.887	2.902	2.910	2.983	2.902	2.871	2.893	2.907	2.899	2.953	2.892
NEP_{load}	#VALUE!	0.444	#VALUE!	0.449	0.456	0.448	0.458	0.454	0.449	0.440	0.453	0.450	0.454	0.456	0.447	0.463	0.453
NEP_{amp}	#VALUE!	7.604	#VALUE!	7.764	7.674	7.612	8.112	7.676	7.641	6.531	7.666	7.839	7.768	7.704	7.669	7.422	7.642
NEP_{det}	#VALUE!	11.953	#VALUE!	12.174	12.068	11.969	12.652	12.066	12.009	10.547	12.051	12.278	12.188	12.104	12.045	11.741	12.022
DQE	#VALUE!	0.564	#VALUE!	0.555	0.559	0.564	0.536	0.560	0.562	0.624	0.560	0.551	0.555	0.558	0.560	0.573	0.561
Vn(det)	#VALUE!	15.7	#VALUE!	15.7	15.7	15.7	15.6	15.7	15.7	16.1	15.7	15.7	15.7	15.7	15.7	15.8	15.7
Vn(total)	#VALUE!	23.8	#VALUE!	23.5	23.7	23.8	22.9	23.7	23.7	26.4	23.7	23.4	23.5	23.6	23.7	24.2	23.8
Measured																	
Q_incident																	
NEP_photon																	
Q_absorbed																	
NEP_photon																	
Vn(total, gain =																	
Vn(total)																	
Sdc																	
NEP(total)																	
DQE																	

PRELIMINARY

Symbol	Value	Value	Value	Value	Value	Value	Value	Value	Value	Value	Value	Value	Value	Value	Value	Value	Value
T0																	
Vn																	
Q																	
NEP_{photon}																	
Vbias																	
	C12	D12	B12	E11	A11	C11	B11	E1	F1	T2	H1	G1	J1	H2	F2	J2	G2
Pthermal	#VALUE!	14.250	14.876	14.566	14.426	14.453	14.291	15.238	14.573	#VALUE!	14.468	14.835	14.541	14.950	14.299	14.706	14.793
Pelec+Q	#VALUE!	14.250	14.876	14.567	14.426	14.453	14.291	15.239	14.574	#VALUE!	14.469	14.837	14.542	14.951	14.300	14.706	14.794
Tbolo	#VALUE!	0.45433	0.45302	0.45591	0.46233	0.45675	0.45484	0.49111	0.48331	#VALUE!	0.48288	0.48764	0.48270	0.48522	0.48164	0.46145	0.45655
T/T0	#VALUE!	1.514	1.510	1.520	1.541	1.523	1.516	1.637	1.611	#VALUE!	1.610	1.625	1.609	1.617	1.605	1.538	1.522
Rbolo	#VALUE!	1.05E+06	1.26E+06	1.16E+06	1.10E+06	1.11E+06	1.05E+06	1.38E+06	1.14E+06	#VALUE!	1.11E+06	1.24E+06	1.13E+06	1.28E+06	1.04E+06	1.18E+06	1.20E+06
Vbolo	#VALUE!	1.90	2.27	2.09	2.00	2.02	1.91	2.48	2.07	#VALUE!	2.02	2.24	2.06	2.30	1.91	2.15	2.19
Ibolo	#VALUE!	1.81	1.80	1.81	1.82	1.81	1.83	1.79	1.82	#VALUE!	1.82	1.80	1.82	1.80	1.83	1.82	1.82
A	#VALUE!	-4.75	-4.79	-4.80	-4.74	-4.79	-4.77	-4.64	-4.64	#VALUE!	-4.64	-4.60	-4.65	-4.62	-4.63	-4.71	-4.82
C	#VALUE!	0.96	0.71	0.81	2.35	0.81	0.82	0.83	0.80	#VALUE!	0.88	0.62	0.99	0.76	0.73	0.79	0.84
G	#VALUE!	123.0	129.7	124.9	119.4	123.9	123.4	110.3	109.6	#VALUE!	108.6	109.3	109.0	110.9	107.7	120.9	125.6
Z/R	#VALUE!	0.547	0.501	0.518	0.525	0.528	0.542	0.449	0.503	#VALUE!	0.510	0.484	0.503	0.475	0.524	0.504	0.497
τ	#VALUE!	6.220	4.270	5.077	15.475	5.151	5.246	5.675	5.659	#VALUE!	6.316	4.359	7.063	5.275	5.345	5.083	5.200
Sdc	#VALUE!	1.21E+08	1.34E+08	1.29E+08	1.26E+08	1.26E+08	1.21E+08	1.48E+08	1.32E+08	#VALUE!	1.30E+08	1.38E+08	1.32E+08	1.41E+08	1.26E+08	1.32E+08	1.33E+08
$NEP_{johnson}$	#VALUE!	3.174	3.037	3.067	3.088	3.103	3.156	2.886	3.034	#VALUE!	3.045	2.995	3.018	2.960	3.089	3.025	2.988
NEP_{phonon}	#VALUE!	2.871	2.941	2.898	2.859	2.886	2.875	2.857	2.816	#VALUE!	2.804	2.830	2.810	2.843	2.789	2.881	2.913
NEP_{load}	#VALUE!	0.459	0.456	0.448	0.442	0.451	0.454	0.405	0.421	#VALUE!	0.420	0.420	0.418	0.417	0.422	0.439	0.436
NEP_{amp}	#VALUE!	8.277	7.476	7.762	7.913	7.937	8.260	6.749	7.580	#VALUE!	7.676	7.231	7.560	7.114	7.967	7.588	7.519
NEP_{det}	#VALUE!	12.878	11.803	12.170	12.364	12.410	12.848	10.782	11.900	#VALUE!	12.024	11.440	11.865	11.277	12.415	11.922	11.824
DQE	#VALUE!	0.527	0.570	0.555	0.547	0.546	0.528	0.614	0.566	#VALUE!	0.561	0.586	0.568	0.593	0.545	0.565	0.570
Vn(det)	#VALUE!	15.6	15.8	15.7	15.6	15.6	15.6	16.0	15.7	#VALUE!	15.7	15.8	15.7	15.9	15.6	15.7	15.7
Vn(total)	#VALUE!	22.6	24.1	23.5	23.2	23.2	22.6	25.7	23.8	#VALUE!	23.7	24.6	23.9	24.8	23.1	23.8	24.0
Measured																	
Q_incident																	
NEP_photon																	
Q_absorbed																	
NEP_photon																	
Vn(total, gain =																	
Vn(total)																	
Sdc																	
NEP(total)																	
DQE																	

PRELIMINARY

Symbol	Value	Value	Value	Value	Value	Value	Value	Value	Value	Value	Value	Value	Value	Value	Value	Value	Value
T0																	
Vn																	
Q																	
NEP_{photon}																	
Vbias																	
	H3	J3	E2	F3	G3	H4	J4	E3	F4	G4	H5	E4	J5	F5	D11	A10	E10
Pthermal	14.504	14.634	14.723	14.990	14.516	14.918	14.879	14.816	15.064	15.100	14.892	14.953	14.889	14.965	14.642	14.410	15.018
Pelec+Q	14.504	14.635	14.723	14.991	14.516	14.918	14.880	14.817	15.065	15.101	14.893	14.954	14.889	14.966	14.643	14.411	15.020
Tbolo	0.45360	0.46111	0.45900	0.46035	0.45894	0.45719	0.46210	0.46374	0.46729	0.46175	0.45739	0.45779	0.45938	0.46567	0.48647	0.48352	0.48537
T/T0	1.512	1.537	1.530	1.535	1.530	1.524	1.540	1.546	1.558	1.539	1.525	1.526	1.531	1.552	1.622	1.612	1.618
Rbolo	1.10E+06	1.15E+06	1.16E+06	1.26E+06	1.09E+06	1.23E+06	1.22E+06	1.20E+06	1.29E+06	1.27E+06	1.23E+06	1.23E+06	1.20E+06	1.20E+06	1.18E+06	1.10E+06	1.29E+06
Vbolo	2.02	2.10	2.14	2.30	2.01	2.25	2.23	2.19	2.34	2.34	2.25	2.26	2.22	2.24	2.13	1.99	2.33
Ibolo	1.84	1.82	1.84	1.82	1.85	1.83	1.83	1.83	1.82	1.84	1.82	1.84	1.84	1.86	1.80	1.81	1.81
A	-4.75	-4.73	-4.79	-4.77	-4.73	-4.80	-4.73	-4.74	-4.70	-4.75	-4.75	-4.80	-4.80	-4.76	-4.52	-4.66	-4.67
C	0.85	0.89	0.80	0.87	0.97	0.80	0.96	0.76	1.02	1.10	0.73	0.77	0.90	0.82	6.18	5.68	0.61
G	124.1	120.7	123.9	124.5	121.0	125.8	122.3	121.5	121.3	124.7	125.9	126.4	124.7	121.9	109.1	108.8	111.8
Z/R	0.523	0.509	0.504	0.483	0.519	0.489	0.490	0.495	0.478	0.476	0.495	0.488	0.490	0.482	0.507	0.516	0.468
τ	5.403	5.723	4.995	5.391	6.252	4.913	6.087	4.826	6.463	6.753	4.483	4.675	5.546	5.197	44.104	40.802	4.155
Sdc	1.25E+08	1.30E+08	1.31E+08	1.37E+08	1.26E+08	1.35E+08	1.34E+08	1.33E+08	1.38E+08	1.37E+08	1.34E+08	1.34E+08	1.33E+08	1.34E+08	1.32E+08	1.29E+08	1.42E+08
$NEP_{johnson}$	3.078	3.032	3.020	2.960	3.067	2.968	2.983	3.001	2.967	2.950	3.010	2.977	2.976	2.959	3.108	3.071	2.932
NEP_{phonon}	2.890	2.877	2.900	2.916	2.872	2.920	2.898	2.891	2.903	2.923	2.920	2.926	2.913	2.901	2.819	2.803	2.853
NEP_{load}	0.446	0.437	0.438	0.433	0.439	0.435	0.433	0.433	0.432	0.431	0.444	0.436	0.432	0.424	0.439	0.424	0.412
NEP_{amp}	7.982	7.684	7.662	7.322	7.950	7.412	7.445	7.518	7.239	7.279	7.487	7.436	7.497	7.438	7.588	7.737	7.047
NEP_{det}	12.455	12.047	12.018	11.560	12.404	11.680	11.723	11.824	11.454	11.502	11.796	11.715	11.789	11.702	11.950	12.116	11.180
DQE	0.544	0.560	0.562	0.581	0.546	0.576	0.574	0.570	0.585	0.583	0.571	0.574	0.571	0.575	0.564	0.558	0.597
Vn(det)	15.6	15.7	15.7	15.8	15.6	15.8	15.7	15.7	15.8	15.8	15.8	15.8	15.7	15.7	15.7	15.7	15.9
Vn(total)	23.1	23.6	23.7	24.4	23.2	24.2	24.1	24.0	24.6	24.5	24.0	24.1	24.0	24.1	23.9	23.5	25.0
Measured																	
Q_incident																	
NEP_photon																	
Q_absorbed																	
NEP_photon																	
Vn(total, gain =																	
Vn(total)																	
Sdc																	
NEP(total)																	
DQE																	

PRELIMINARY

Symbol	Value	Value	Value	Value	Value	Value	Value	Value	Value	Value	Value	Value	Value	Value	Value	Value	Value
T0																	
Vn																	
Q																	
NEP_{photon}																	
Vbias																	
	C10	B10	D10	A9	E9	C9	B9	D9	A8	C8	E8	D8	B8	C7	E7	A7	D7
Pthermal	14.777	14.640	14.378	14.661	#VALUE!	14.895	14.812	14.759	14.832	14.543	14.977	15.629	14.959	15.029	14.823	14.831	14.632
Pelec+Q	14.778	14.641	14.379	14.662	#VALUE!	14.895	14.813	14.759	14.833	14.543	14.978	15.630	14.960	15.029	14.824	14.831	14.632
Tbolo	0.48265	0.47299	0.48042	0.48417	#VALUE!	0.45818	0.46038	0.46128	0.46250	0.45898	0.46260	0.46005	0.46132	0.46382	0.46136	0.46197	0.45829
T/T0	1.609	1.577	1.601	1.614	#VALUE!	1.527	1.535	1.538	1.542	1.530	1.542	1.533	1.538	1.546	1.538	1.540	1.528
Rbolo	1.22E+06	1.15E+06	1.06E+06	1.15E+06	#VALUE!	1.24E+06	1.22E+06	1.20E+06	1.20E+06	1.11E+06	1.27E+06	1.50E+06	1.26E+06	1.29E+06	1.21E+06	1.21E+06	1.15E+06
Vbolo	2.20	2.10	1.95	2.11	#VALUE!	2.25	2.21	2.18	2.20	2.04	2.30	2.69	2.29	2.33	2.20	2.21	2.10
Ibolo	1.81	1.83	1.84	1.83	#VALUE!	1.82	1.82	1.82	1.83	1.83	1.81	1.79	1.82	1.81	1.83	1.83	1.82
A	-4.67	-4.69	-4.66	-4.64	#VALUE!	-4.75	-4.78	-4.73	-4.71	-4.77	-4.77	-4.78	-4.73	-4.73	-4.76	-4.76	-4.76
C	0.66	0.67	0.78	0.68	#VALUE!	0.87	0.72	0.63	0.88	1.15	0.64	0.64	0.72	0.71	0.69	0.83	0.69
G	112.3	116.0	110.2	110.0	#VALUE!	126.5	124.1	123.1	123.2	122.5	124.2	131.3	124.4	124.2	124.0	123.2	124.2
Z/R	0.490	0.505	0.520	0.497	#VALUE!	0.498	0.498	0.504	0.500	0.518	0.485	0.447	0.489	0.484	0.498	0.496	0.514
τ	4.565	4.471	5.562	4.756	#VALUE!	5.324	4.492	3.990	5.522	7.338	3.943	3.721	4.457	4.425	4.342	5.237	4.330
Sdc	1.36E+08	1.31E+08	1.26E+08	1.33E+08	#VALUE!	1.33E+08	1.33E+08	1.32E+08	1.32E+08	1.27E+08	1.37E+08	1.48E+08	1.35E+08	1.37E+08	1.33E+08	1.33E+08	1.28E+08
$NEP_{johnson}$	3.005	3.047	3.089	3.021	#VALUE!	3.035	3.009	3.046	3.043	3.068	2.980	2.897	3.001	2.995	3.021	3.006	3.070
NEP_{phonon}	2.843	2.853	2.809	2.824	#VALUE!	2.924	2.906	2.897	2.902	2.883	2.915	2.987	2.915	2.918	2.906	2.902	2.897
NEP_{load}	0.423	0.432	0.426	0.419	#VALUE!	0.449	0.440	0.445	0.444	0.442	0.437	0.438	0.441	0.441	0.440	0.437	0.447
NEP_{amp}	7.338	7.640	7.920	7.533	#VALUE!	7.523	7.492	7.595	7.590	7.879	7.313	6.746	7.388	7.300	7.542	7.508	7.785
NEP_{det}	11.585	11.993	12.361	11.834	#VALUE!	11.857	11.799	11.946	11.940	12.315	11.558	10.822	11.665	11.551	11.868	11.816	12.200
DQE	0.580	0.563	0.548	0.569	#VALUE!	0.568	0.571	0.564	0.565	0.549	0.581	0.612	0.576	0.581	0.568	0.570	0.554
Vn(det)	15.8	15.7	15.6	15.7	#VALUE!	15.8	15.7	15.7	15.7	15.6	15.8	16.0	15.8	15.8	15.7	15.7	15.7
Vn(total)	24.3	23.7	23.2	23.9	#VALUE!	24.0	24.0	23.8	23.8	23.3	24.4	25.8	24.3	24.4	23.9	24.0	23.5
Measured																	
Q_incident																	
NEP_photon																	
Q_absorbed																	
NEP_photon																	
Vn(total, gain =																	
Vn(total)																	
Sdc																	
NEP(total)																	
DQE																	

PRELIMINARY

Symbol	Value	Value	Value	Value	Value	Value	Value	Value	Value	Value	Value	Value	Value	Value	Value	Value	Value
T0																	
Vn																	
Q																	
NEP_{photon}																	
Vbias																	
	B7	C6	E6	A6	G5	H6	J6	F6	G6	H7	F7	J7	G7	H8	F8	G8	J8
Pthermal	14.806	15.215	14.387	14.866	14.759	14.855	14.558	15.097	14.849	14.735	14.893	#VALUE!	14.647	14.856	15.166	14.800	14.953
Pelec+Q	14.806	15.215	14.388	14.866	14.760	14.855	14.558	15.097	14.850	14.735	14.894	#VALUE!	14.649	14.857	15.168	14.802	14.954
Tbolo	0.46239	0.46575	0.45777	0.45892	0.45982	0.45924	0.45801	0.46256	0.46114	0.45940	0.46011	#VALUE!	0.48582	0.48318	0.48874	0.48780	0.48428
T/T0	1.541	1.552	1.526	1.530	1.533	1.531	1.527	1.542	1.537	1.531	1.534	#VALUE!	1.619	1.611	1.629	1.626	1.614
Rbolo	1.21E+06	1.36E+06	1.07E+06	1.23E+06	1.14E+06	1.18E+06	1.09E+06	1.24E+06	1.16E+06	1.15E+06	1.18E+06	#VALUE!	1.12E+06	1.16E+06	1.27E+06	1.17E+06	1.18E+06
Vbolo	2.20	2.45	1.96	2.24	2.13	2.19	2.02	2.31	2.17	2.12	2.20	#VALUE!	2.07	2.17	2.36	2.16	2.22
Ibolo	1.82	1.80	1.83	1.82	1.86	1.85	1.86	1.86	1.87	1.85	1.86	#VALUE!	1.86	1.87	1.85	1.85	1.87
A	-4.75	-4.71	-4.71	-4.73	-4.78	-4.79	-4.77	-4.70	-4.78	-4.73	-4.78	#VALUE!	-4.62	-4.64	-4.59	-4.59	-4.66
C	0.80	0.60	0.88	0.77	0.89	0.81	0.94	0.80	0.76	0.81	0.70	#VALUE!	0.70	0.69	0.54	0.74	0.74
G	122.8	124.4	122.2	124.8	123.8	124.8	122.9	125.0	124.0	123.9	125.1	#VALUE!	109.2	112.0	111.6	110.4	111.8
Z/R	0.498	0.472	0.536	0.497	0.501	0.494	0.517	0.482	0.494	0.507	0.493	#VALUE!	0.498	0.484	0.462	0.491	0.473
τ	5.051	3.672	5.699	4.784	5.605	5.008	6.006	4.947	4.734	5.073	4.304	#VALUE!	4.930	4.711	3.676	5.156	5.038
Sdc	1.33E+08	1.41E+08	1.22E+08	1.33E+08	1.29E+08	1.32E+08	1.26E+08	1.34E+08	1.31E+08	1.28E+08	1.32E+08	#VALUE!	1.31E+08	1.34E+08	1.40E+08	1.33E+08	1.36E+08
$NEP_{johnson}$	3.015	2.968	3.148	3.020	3.016	2.992	3.058	2.999	2.998	3.055	3.000	#VALUE!	3.033	2.989	2.951	3.042	2.947
NEP_{phonon}	2.898	2.929	2.873	2.912	2.901	2.912	2.885	2.925	2.907	2.901	2.916	#VALUE!	2.819	2.845	2.861	2.837	2.849
NEP_{load}	0.438	0.440	0.454	0.444	0.434	0.433	0.437	0.438	0.431	0.443	0.435	#VALUE!	0.417	0.415	0.412	0.423	0.407
NEP_{amp}	7.519	7.087	8.164	7.492	7.733	7.576	7.966	7.466	7.639	7.788	7.595	#VALUE!	7.654	7.484	7.143	7.535	7.362
NEP_{det}	11.833	11.271	12.720	11.806	12.107	11.897	12.423	11.765	11.979	12.197	11.927	#VALUE!	11.994	11.762	11.313	11.852	11.585
DQE	0.569	0.593	0.533	0.570	0.558	0.567	0.545	0.572	0.563	0.554	0.565	#VALUE!	0.563	0.572	0.591	0.568	0.579
Vn(det)	15.7	15.9	15.6	15.8	15.7	15.7	15.6	15.8	15.7	15.7	15.7	#VALUE!	15.7	15.7	15.8	15.7	15.7
Vn(total)	24.0	24.9	22.8	24.0	23.5	23.9	23.1	24.1	23.7	23.5	23.8	#VALUE!	23.7	24.0	24.8	23.9	24.3
Measured																	
Q_incident																	
NEP_photon																	
Q_absorbed																	
NEP_photon																	
Vn(total, gain =																	
Vn(total)																	
Sdc																	
NEP(total)																	
DQE																	

PRELIMINARY

Symbol	Value	Value	Value	Value	Value	Value	Value	Value	Value	Value	Value	Parameter
T0												
Vn												
Q												
NEP_{photon}												
Vbias												
	F9	H9	G9	J9	F10	H10	G10	F11	J10	H11	G11	
Pthermal	14.941	14.834	#VALUE!	14.960	14.712	14.998	14.978	14.863	14.774	14.682	14.960	Power as function of Temperature
Pelec+Q	14.943	14.835	#VALUE!	14.960	14.712	14.998	14.978	14.863	14.774	14.683	14.960	Electrical + Absorbed Power
Tbolo	0.48647	0.48349	#VALUE!	0.45922	0.45792	0.45890	0.45675	0.45518	0.45837	0.45612	0.45585	Bolometer Temperature
T/T0	1.622	1.612	#VALUE!	1.531	1.526	1.530	1.522	1.517	1.528	1.520	1.520	
Rbolo	1.18E+06	1.18E+06	#VALUE!	1.20E+06	1.12E+06	1.22E+06	1.21E+06	1.17E+06	1.16E+06	1.09E+06	1.22E+06	Bolometer Resistance
Vbolo	2.21	2.18	#VALUE!	2.23	2.09	2.26	2.25	2.18	2.15	2.05	2.25	Voltage across Bolometer
Ibolo	1.87	1.85	#VALUE!	1.87	1.87	1.85	1.86	1.86	1.85	1.89	1.85	Current through Bolometer
A	-4.64	-4.67	#VALUE!	-4.76	-4.75	-4.76	-4.78	-4.79	-4.78	-4.74	-4.71	
C	0.63	0.65	#VALUE!	0.85	0.81	0.77	0.70	0.90	0.90	0.80	0.79	Dynamic Heat Capacity
G	111.4	111.8	#VALUE!	125.4	124.8	126.5	127.8	127.5	124.9	125.1	127.1	Dynamic Thermal Conductance
Z/R	0.476	0.483	#VALUE!	0.489	0.510	0.488	0.491	0.498	0.502	0.512	0.495	
τ	4.299	4.484	#VALUE!	5.250	5.053	4.699	4.263	5.476	5.590	4.967	4.802	Electrical Time Constant
Sdc	1.35E+08	1.35E+08	#VALUE!	1.32E+08	1.27E+08	1.33E+08	1.32E+08	1.30E+08	1.30E+08	1.25E+08	1.32E+08	Electrical Responsivity at 0 Hz
$NEP_{johnson}$	2.973	2.976	#VALUE!	2.989	3.062	2.996	3.003	3.015	3.022	3.063	3.025	Johnson Noise Prior to Demodulation
NEP_{phonon}	2.848	2.843	#VALUE!	2.920	2.905	2.928	2.935	2.927	2.908	2.905	2.930	Phonon Noise Prior to Demodulation
NEP_{load}	0.411	0.413	#VALUE!	0.434	0.443	0.438	0.440	0.440	0.438	0.441	0.447	Johnson Noise from R_L Prior to Demod.
NEP_{amp}	7.398	7.417	#VALUE!	7.561	7.897	7.509	7.566	7.686	7.701	8.020	7.575	Amplifier Noise Prior to Demodulation
NEP_{det}	11.645	11.668	#VALUE!	11.878	12.342	11.818	11.897	12.054	12.072	12.500	11.918	Detector Noise after Demodulation
DQE	0.577	0.576	#VALUE!	0.567	0.548	0.570	0.566	0.560	0.559	0.542	0.566	BLIP Figure-of-Merit for Detector
Vn(det)	15.7	15.7	#VALUE!	15.7	15.6	15.7	15.7	15.7	15.7	15.6	15.7	Voltage Noise of Detector After Demod.
Vn(total)	24.2	24.2	#VALUE!	23.9	23.3	24.0	23.9	23.6	23.6	23.0	23.9	Total Noise after Demodulation
Measured												
Q_incident												
NEP_photon												
Q_absorbed												
NEP_photon												
Vn(total, gain =												
Vn(total)												
Sdc												
NEP(total)												
DQE												

Symbol	Equation (or Comments)
T0	
Vn	
Q	
NEP_{photon}	
Vbias	
Pthermal	$P_{thermal} = [G300/(1+\beta)][T/0.3]^{\beta}T$ evaluated from To to Tb
Pelec+Q	$P_e + Q = [V_{bias}/(2R_L + R_B)]^2R_B + Q$
Tbolo	Solve for Tb using Newtonian recursion such that $P_{thermal} = P_e + Q$
T/T0	T/To = Tbolo/To
Rbolo	$Rbolo = (Ro)\exp[(\Delta/Tb)^{1/2}]$
Vbolo	$Vbolo = [Vbias/(2R_L + R_B)]R_B$
Ibolo	$Ibolo = Vbias/(2R_L + R_B)$
A	$A = (T/R)(dR/dT) = -(1/2)[(\Delta/Tb)^{1/2}]$
C	$C = C300[(T/0.3)^{\gamma}]$
G	$G = G300[(T/0.3)^{\beta}]$
Z/R	$Z/R = (I/V)(dV/dI) = [-1 - GTb/(P_eA)] / [1 - GTb/(P_eA)]$
τ	$\tau = [C/2G][(Z/R + 1)(1 + 2R_L/R_B)] / [Z/R + 2R_L/R_B]$
Sdc	$Sdc = (1/2)[R_B/P_e]^{1/2} [1 - Z/R] / [1 + (Z/R)(R_B/2R_L)$
$NEP_{johnson}$	$NEP_{johnson} = [(4k(Tb)^3G^2)/(P_eA^2)]^{1/2}$
NEP_{phonon}	$=\{[(4kTo^2G)(\beta+1)((T/To)^{2\beta+3}-1)]/[(2\beta+3)(T/To)^{\beta}((T/To)^{\beta+1}-1)]\}^{1/2}$
NEP_{load}	$NEP_{load} = [4kTo/2R_L]^{1/2} \lvert 2(Z/R)R_B Ibolo/[(Z/R) - 1]\rvert$
NEP_{amp}	$NEP_{amp} = Vn / Sdc$
NEP_{det}	$NEP_{det} = [2NEP_{john}^2+NEP_{phon}^2+2NEP_{load}^2+2NEP_{amp}^2]^{1/2}$
DQE	$DQE = NEP_{photon}^2 / (NEP_{photon}^2 + NEP_{det}^2)$
Vn(det)	$Vn(det) = NEP_{det}Sdc$
Vn(total)	$Vn(total) = [NEP_{det}^2 + NEP_{photon}^2]^{1/2}Sdc$
Measured	
Q_incident	
NEP_photon	
Q_absorbed	
NEP_photon	
Vn(total, gain =	
Vn(total)	
Sdc	
NEP(total)	
DQE	

EIDP Coverpage For QM PLW BDA

Unit Identfication								
Name	:	QM PLW BDA						
Part #	:	10209800 -8						
S/N	:	#007						

Environmemtal Testing							
	Axes Tested	Temperature	Duration or Number of Cycles	Pass/Fail	Requirement	Source	Waiver #
Random Vibration Test	X, Y, Z	100 K	2 min per axis	P	X, Y, Z at 90 K 1 min per axis	SSSD Sec # 3.4	HR-SP-JPL-RFW-006
High Level Sine Vibe Test	None	NA	NA	NA	X, Y, Z at 90 K	SSSD Sec # 3.4	HR-SP-JPL-RFW-005
Bakeout	NA	80 C	5 days as part of the assembly procedures	P	None (other than as part of the assembly procedure)	D-20549	
Thermal Cycles	NA	RoomT to ~ < 10 K	27	P	Min15 from RmT to < 77 K	D-20549	

Other Testing							
	Frequency (Hz)		Note		Minimum Performance	Source	Waiver #
Lowest Resonant Frequency (X-axis)	283 Hz		Cold		> 200 Hz (Goal: >250 Hz)	SSSD Sec # 3.1.3	NA
Lowest Resonant Frequency (Y-axis)	281 Hz		Cold		> 200 Hz (Goal: >250 Hz)	SSSD Sec # 3.1.3	NA
Lowest Resonant Frequency (Z-axis)	276 Hz		Cold		> 200 Hz (Goal: >250 Hz)	SSSD Sec # 3.1.3	NA
Metrology Measurements were performed before and after the Vibration Test and the Thermal Cycles							
	Motion in X/Y	Motion in Z		Meets Goal ?	Performance Goal	Source	Waiver #
Maximum motion due to Random Vibration Test 1st axis (X)	21 μm	40 μm		Y	125 μm in X/Y and 500 μm in Z	SSSD Sec # 3.1.1	NA
Maximum motion due to Random Vibration Test 2nd axis (Y)	22 μm	8.6 μm		Y	125 μm in X/Y and 500 μm in Z	SSSD Sec # 3.1.1	NA
Maximum motion due to Random Vibration Test 3rd axis (Z)	9.5 μm	11 μm		Y	125 μm in X/Y and 500 μm in Z	SSSD Sec # 3.1.1	NA
Cumulative Maximum motion	34 μm	56 μm		Y	125 μm in X/Y and 500 μm in Z	SSSD Sec # 3.1.1	NA
Cold Continuity Measurements : In Process							
				Pass/Fail	Requirement	Source	Waiver #
Cold Continuity Test (1st Thermal Cycle)				P	None	NA	NA
Cold Continuity Test (2nd Thermal Cycle)				P	None	NA	NA

QM BDA Random Vibration Test

P/N 10209800-8

S/N 007

X-axis Shake, Cold, Sine Surveys (Before and After 0 dB Random Vibe)

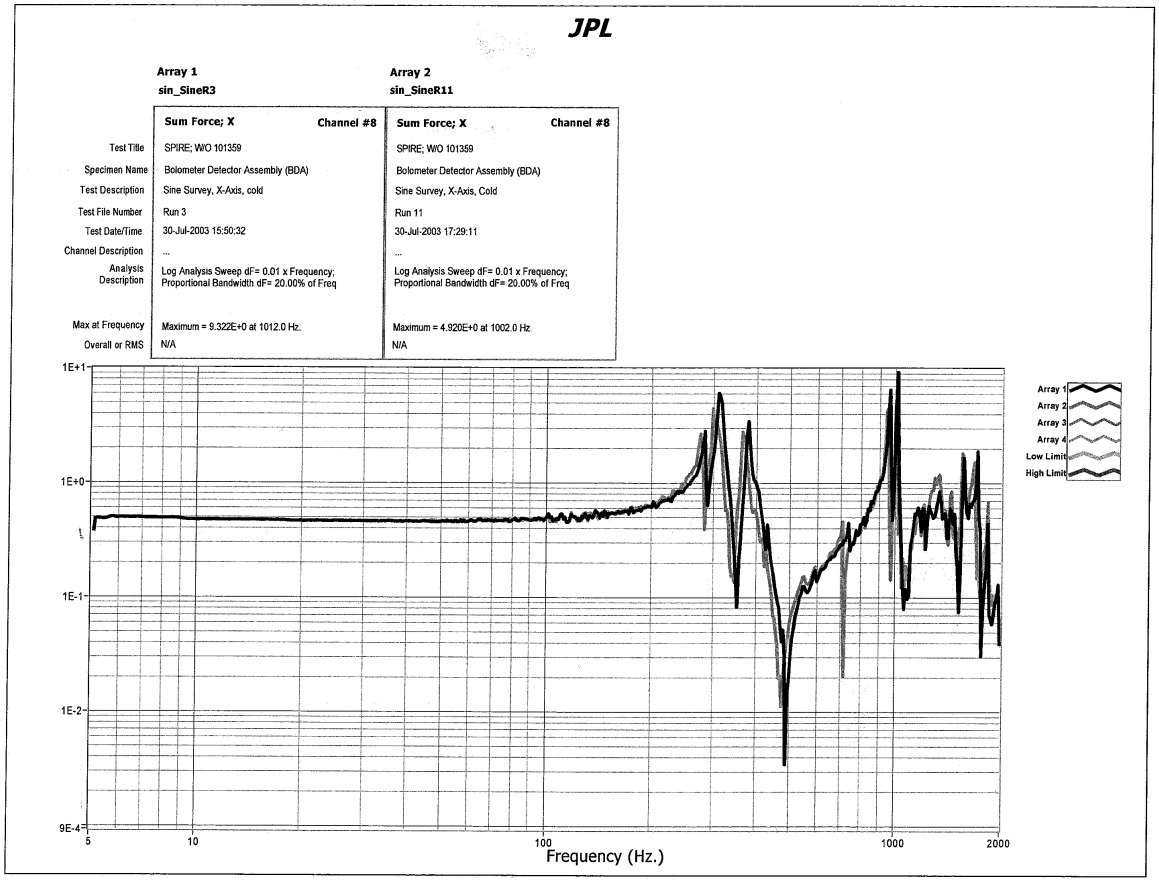

Y-axis Shake, Cold, Sine Surveys (Before and After 0 dB Random Vibe)

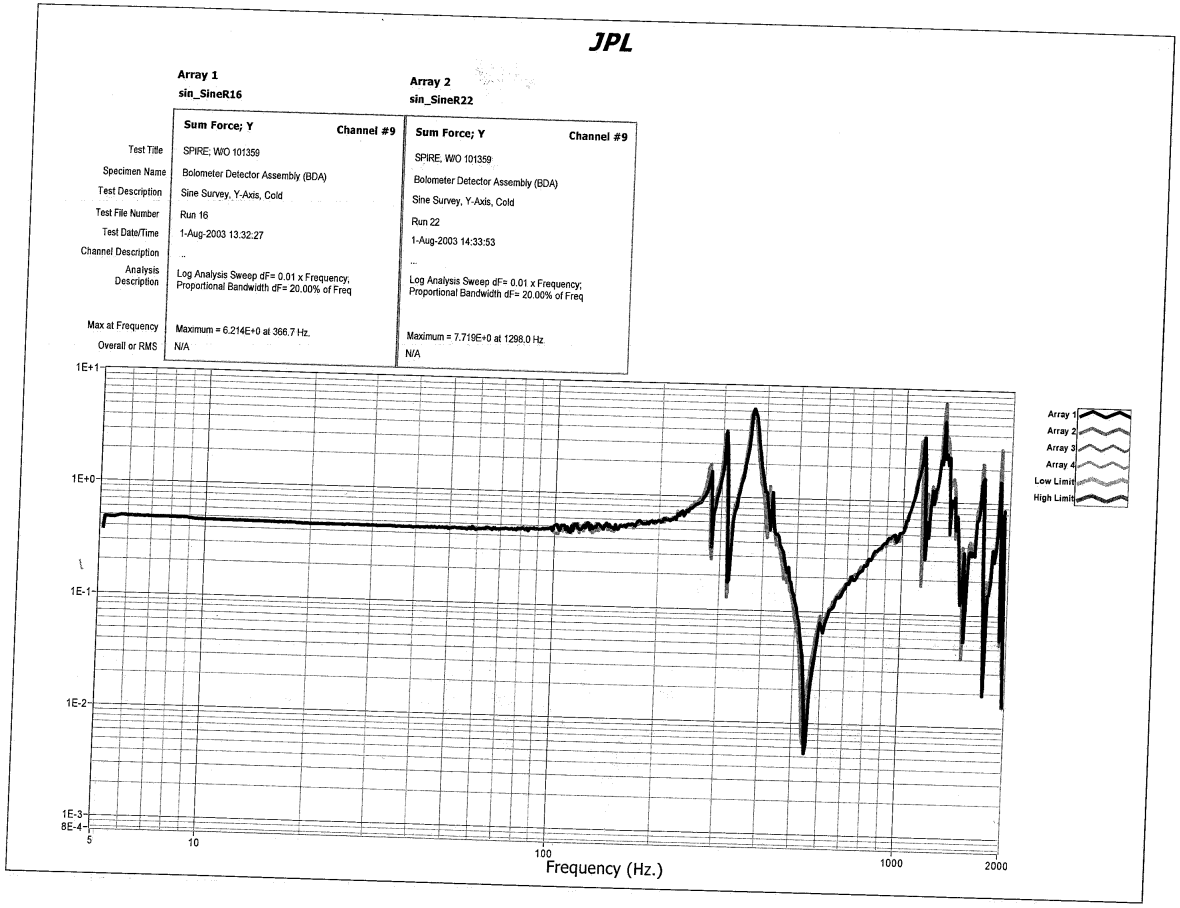

Z-axis Shake, Cold, Sine Surveys (Before and After 0 dB Random Vibe)

JPL

	Array 1 sin_SineR29	Array 2 sin_SineR35
	Sum Force; Z — Channel #10	Sum Force; Z — Channel #10
Test Title	SPIRE; W/O 101359	SPIRE; W/O 101359
Specimen Name	Bolometer Detector Assembly (BDA)	Bolometer Detector Assembly (BDA)
Test Description	Sine Survey, Z-Axis, Cold	Sine Survey, Z-Axis, Cold
Test File Number	Run 29	Run 35
Test Date/Time	5-Aug-2003 14:4:51	5-Aug-2003 15:21:46
Channel Description	...	..
Analysis Description	Log Analysis Sweep dF= 0.01 x Frequency; Proportional Bandwidth dF= 20.00% of Freq	Log Analysis Sweep dF= 0.01 x Frequency; Proportional Bandwidth dF= 20.00% of Freq
Max at Frequency	Maximum = 1.077E+1 at 465.6 Hz.	Maximum = 1.048E+1 at 456.5 Hz.
Overall or RMS	N/A	N/A

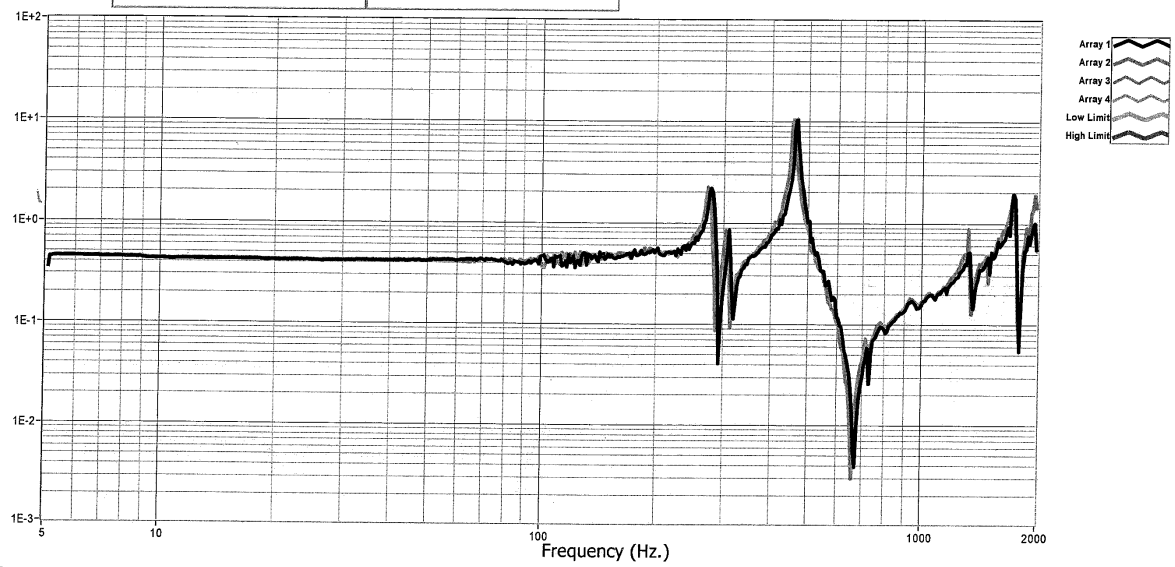

Hardware ID PFM PSW BDA, 10209800-3 S/N 013

Date	Time	AIDS	Power	Mate	Demate	Transport	Notes
							Assembly Process Connector Mates
8-Jan-2004		240848		J01	J01		kapton cable sub-assy test
8-Jan-2004		240861		J04	J04		kapton cable sub-assy test
9-Feb-2004		240840		J05	J05		kapton cable sub-assytest
3-Jun-2004		240862		J03	J03		kapton cable sub-assy test
8-Jun-2004		240850		J02	J02		kapton cable sub-assy test
8-Jun-2004		240841		J06	J06		kapton cable sub-assy test
29-Jul-2004		242949		J01-J06	J01-J06		kapton cable post-installation test
3-Aug-2004		242949		J01-J06	J01-J06		Load resistor test
15-Oct-2004		242949		J01-J06	J01-J06		detector test
20-Oct-2004		242949		J01-J06	J01-J06		detector test, after feedhorn installation
							Assembly Complete
24-Oct-2004		244109		J01-J06	J01-J06		assembly complete electical test (pre-bakeout)
24-Oct-2004		244109				x	103 -> MDL -> 103, for optical metrology
25-Oct-2004		244109					Filter installation
25-Oct-2004		244109					staking and ink-stamp epoxy cure (66C, 3hrs)
25-Oct-2004		244109				x	103 -> bld 158 for Vacuum Bakeout (80C, 24 hrs, 10^-5 torr)
28-Oct-2004		244109				x	bld 158 -> bld 170 for pre-vibe metrology, -> 103
28-Oct-2004		244109		J01-J06	J01-J06		post-bakeout, pre-vibe electrical test
28-Oct-2004		244109				x	103 -> 183 for shake prep.
28-Oct-2004		244165					installation into shake facility
29-Oct-2004		244165				x	183 -> 144 (shake lab)
29-Oct-2004		244165					pump / vent (for RmT pre-shake tests)
29-Oct-2004		244165					pump / cool to ~100K / **Shake Test** / warm / vent
3-Nov-2004		244165					pump / vent (for RmT post-shake tests)
3-Nov-2004		244165				x	144 -> 183, for removal from shake fixture
3-Nov-2004		244165				x	183 -> 170, for metrology
3-Nov-2004		244165				x	170 -> 103-109D
12-Nov-2004		244311		J01-J04	J01-J04		post-vibe electrical test

Hardware ID PFM PSW BDA, 10209800-3 S/N 013

Date	Time	AIDS	Power	Mate	Demate	Transport	Notes
16-Nov-2004		244311				x	103 -> 183 for performance testing
16-Nov-2004		244328		J01-J06			Installation in BODAC
16-Nov-2004		244328					pump
17-Nov-2004		244328					cooldown
interim							performance testing
17-Dec-2004							warmup
20-Dec-2004							vent
20-Dec-2004							pump
21-Dec-2004							cooldown
interim							performance testing
28-Dec-2004		244352					warmup
4-Jan-2005		244352					vent
4-Jan-2005		244352			J01-J06		Removal from BODAC
12-Jan-2005		244174				x	183->170->183 for metrology
16-Jan-2005		244174		J01, J02			installation in thermal cycle facility
16-Jan-2005		244174					pump
17-Jan-2005		244174					thermal cycle RmT -> 4K -> RmT
18-Jan-2005		244174					vent
18-Jan-2005		244174			J01,J02		remove from thermal cycle facility
18-Jan-2005		244174				x	183->170->183 for metrology
18-Jan-2005		244174		J03, J04			installation in thermal cycle facility
18-Jan-2005		244174					pump
19-Jan-2005		244174					thermal cycle RmT -> 4K -> RmT
25-Jan-2005		244174					vent
25-Jan-2005		244174			J03,J04		remove from thermal cycle facility
25-Jan-2005		244174				x	183->170 for metrology
25-Jan-2005		244174				x	170 -> 103-109D for dry-box storage.
17-Feb-2005		244892		J01-J06	J01-J06		Final electrical test.

REVISIONS

LTR	ZONE	DESCRIPTION	CODE	DWN	CHK	STRUCT	MATL	THRM CONT	PEM		ENGR	DSGN SUPV	DATA MGT	RELEASE DATE
A		INITIAL RELEASE	CODE B	SEE TITLE BLOCK									RTN	12/7/01
B		UPDATED: MASS & CG'S, FILTER SHAPE,VOLUME NEED AROUND CAPSTANS, CONN. POSITIONS. REMOVED MODES AND MASS PARTICIPATION; ROTATED PIXEL MAP 180°.	B	DJC	MAW				MIH		MAW		RGB	09/08/04
C		INCORPORATED ECR HR-SP-JPL-ECR-003; CHANGED FOCUS FOR -2 &-3; CHANGED DP TO DK	B											

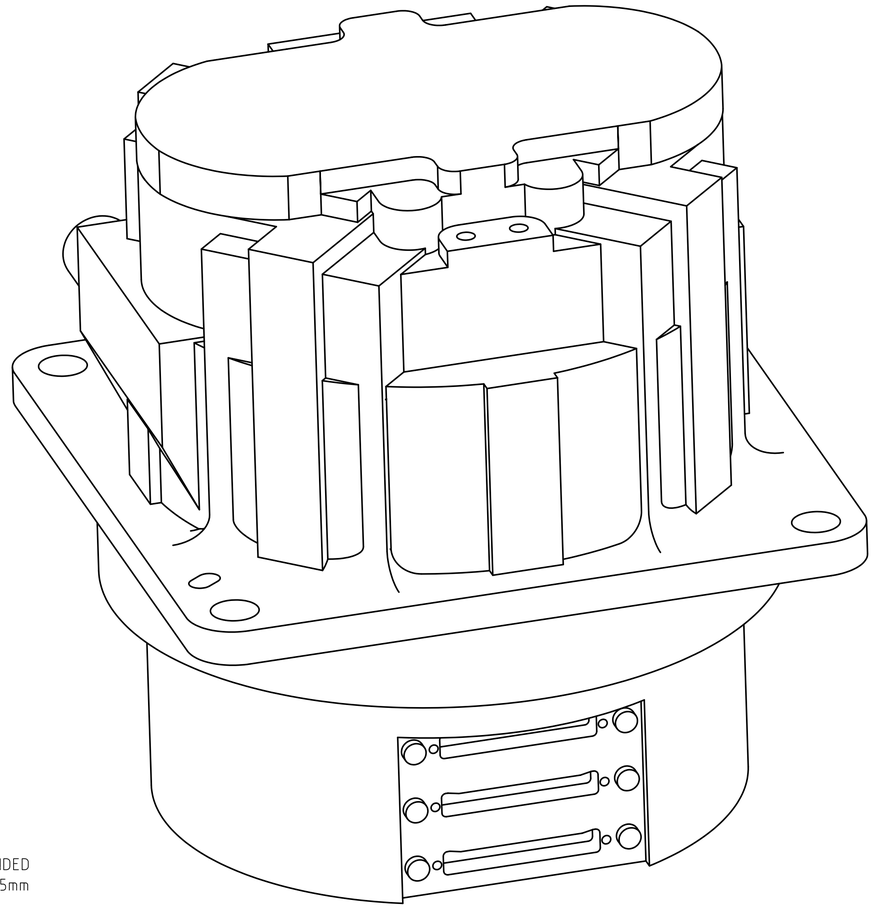

GENERAL VIEW
REFERENCE ONLY

9. ALL DIMENSIONS SHOWN FOR THE 300mK STAGE ARE FOR THE NOMINAL SUSPENDED POSITION. THE SUSPENDED UNIT MAY BE SHIFTED FROM NOMINAL POSITION ±0,5mm IN ANY AXIS.

8. ONLY PIXELS, DOWEL PIN HOLES, AND SLOTS VISIBLE. ALL OTHER FEATURES OMITTED FOR CLARITY.

7. FOR PHOTOMETER AND SPECTROMETER SUBSYSTEM INTERFACE DATA AND LAYOUT CONFIGURATION, SEE SHEETS 5-7.

6. DIMENSIONS IN {} ARE CALCULATED FOR OPERATING TEMPERATURE AND ARE PROVIDED FOR REFRENCE ONLY. ALL OTHED DIMENSIONS ARE BASED ON AN ASSEMBLY TEMPERATURE OF 20° C.

5. INDICATES CONNECTOR POSITION. CONNECTORS INSTALLED ARE NANONIC STM 051 M6SN.

4. REFER TO TABLES ON SHEETS 5, 6, AND 7 FOR DIFFERENCES BETWEEN DETECTOR ARRAYS.

3. ASSEMBLY REFERENCE DESIGNATOR, TITLE, PART NUMBER, REVISION LETTER, AND SERIAL NUMBER TO APPEAR AS SHOWN IN THIS AREA.

2. THIS IS THE INTERFACE CONTROL DRAWING FOR THE BOLOMETER DETECTOR ARRAY, JPL PART NUMBER 10209800. JPL DRAWING NUMBER 10209800 SHALL CONTAIN THE FOLLOWING NOTE: THIS ASSEMBLY MEETS THE INTERFACE REQUIREMENTS OF JPL INTERFACE CONTROL DRAWING 10209721.

1. THIS TECHNICAL DATA IS EXPORT CONTROLLED UNDER U.S. LAW AND IS BEING TRANSFERRED BY JPL TO PPARC PURSUANT TO THE NASA / PPARC LETTER OF AGREEMENT WHICH ENTERED INTO FORCE ON DECEMBER 2, 1999. THIS TECHNICAL DATA IS TRANSFERRED TO PPARC FOR USE EXCLUSIVELY ON THE NASA/PPARC SPIRE ON FIRST COOPERATIVE PROJECT, MAY NOT BE USED FOR ANY OTHER PURPOSE, AND SHALL NOT BE RE-TRANSFERRED OR DISCLOSED TO ANY OTHER PARTY WITHOUT THE PRIOR WRITTEN APPROVAL OF NASA.

NOTES: UNLESS OTHERWISE SPECIFIED

INTERFACE DRAWING

QTY REQD	ITEM NO	REF DES	CAGE NO	PART OR IDENTIFYING NO	NOMENCLATURE OR DESCRIPTION	SPECIFICATION	MATERIAL OR NOTE	ZONE

PARTS LIST

MATERIAL

METRIC

THIRD ANGLE PROJECTION

NEXT ASSEMBLY	USED ON
	SPIRE

APPLICATION

UNLESS OTHERWISE SPECIFIED
DIMENSIONS ARE IN MILLIMETERS

LINEAR TOLERANCES:

0–6	± 0.1
OVER 6–30	± 0.2
OVER 30–120	± 0.3
OVER 120–315	± 0.5
OVER 315–1000	± 0.8
OVER 1000	± 1.2

ANGULAR TOLERANCES:
± 0.5°

MACHINE FINISH (MICROMETERS) 3.2

DO NOT SCALE DRAWING
INTERPRET DWG PER ASME Y14.100M

CONTRACT NO 1244858

APPD _____ DATE _____

DWN	D CRUMB	11/9/01
CHK	B BURDICK	11/14/01
STRUCT	K BROWNING	11/19/01
MATL	M KNOPP	11/19/01
THRM CONT		
MSSL	A. J. COKER	11/7/01
PEM	G. LILENTHAL	12/13/01
ENGR	L. HUSTED	11/19/01
DSGN SUPV		

JET PROPULSION LABORATORY
CALIFORNIA INSTITUTE OF TECHNOLOGY
PASADENA, CA 91109

RELEASED THROUGH EDMG

BOLOMETER DETECTOR ARRAY, SPIRE

SIZE	CAGE NO		REV
A1	23835	10209721	C

SCALE NONE | UNCLASSIFIED | SHEET 1 OF 7

REV 2/00

AutoCAD GENERATED

10209721

Released on SEP-22-2004 by Richard G Bannister and signed by Mark A Weilert CHK, Dustin J Crumb DEGN, Martin I Herman PEM, Mark A Weilert COGE, Richard G Bannister

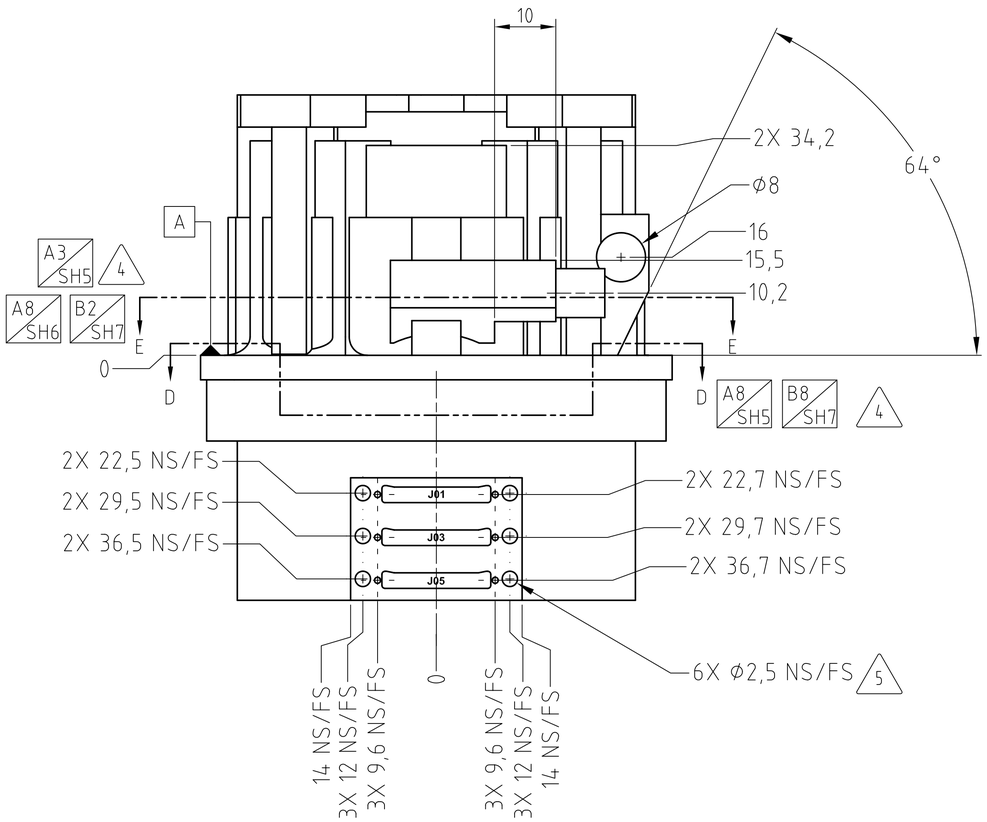

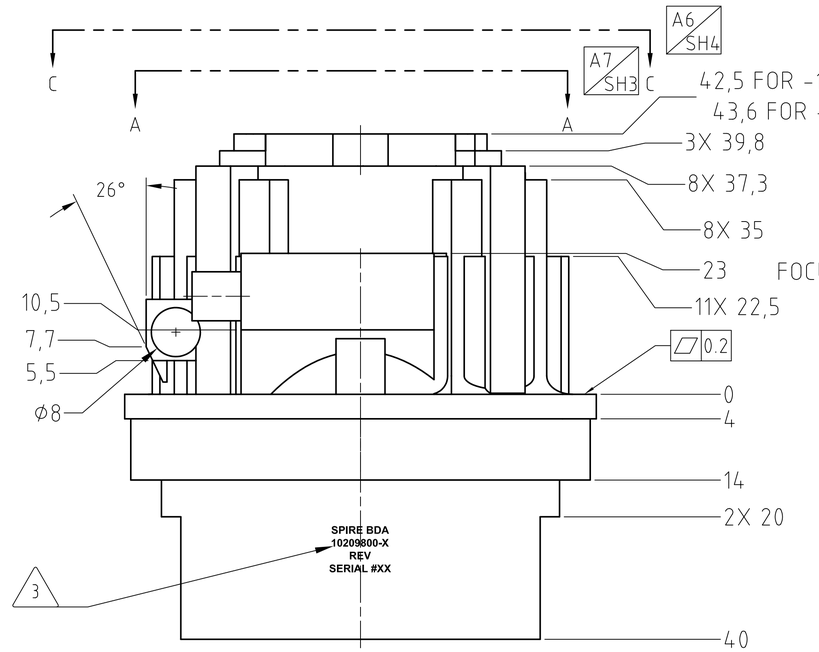

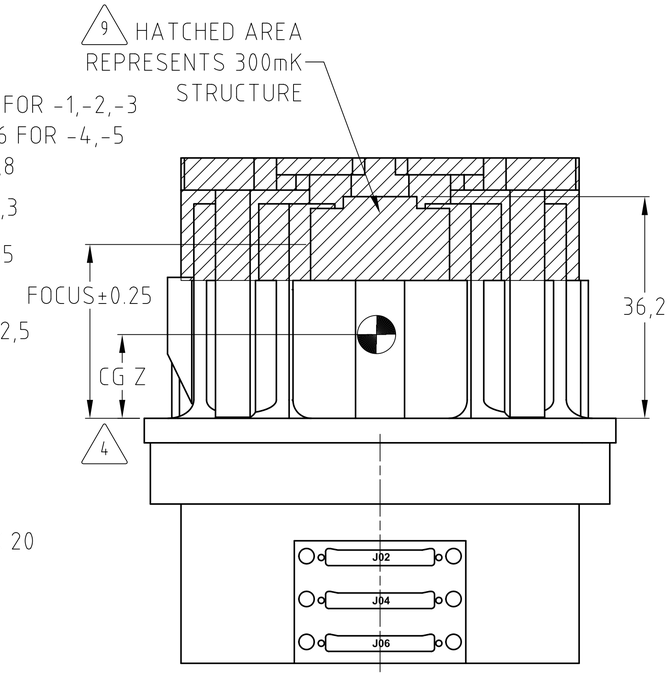

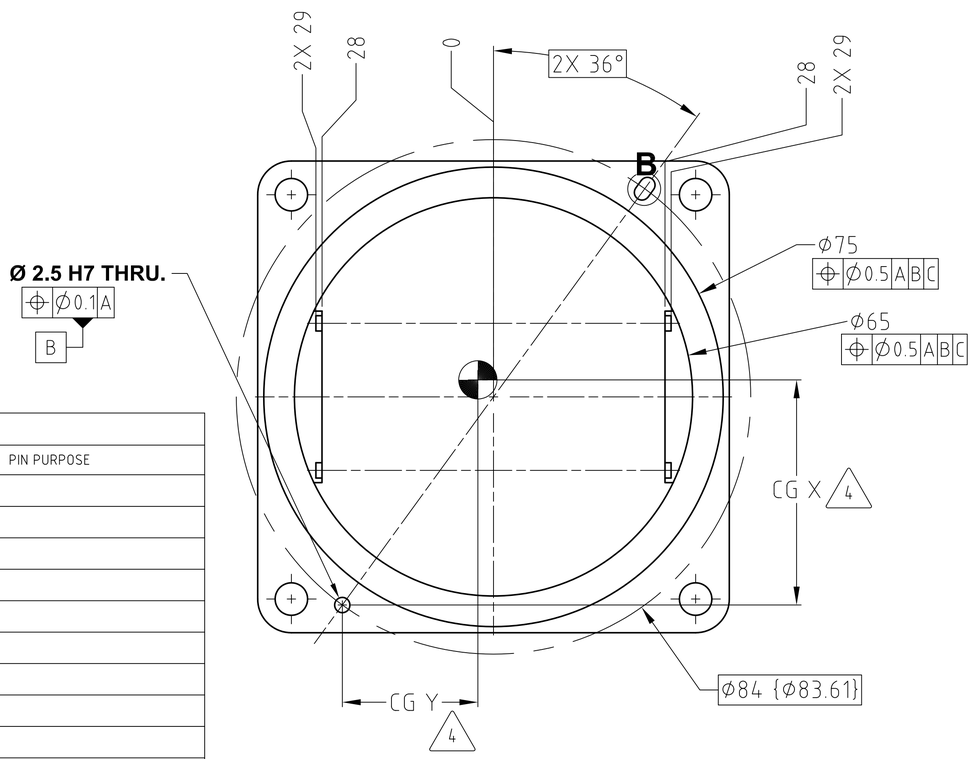

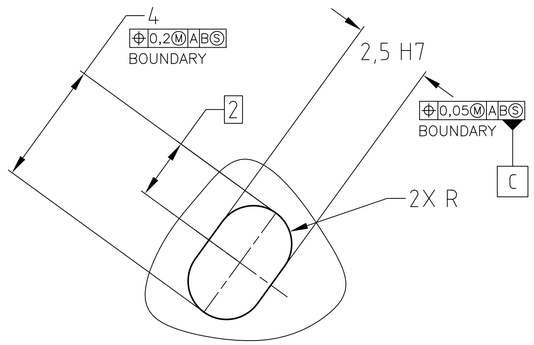

VIEW B
SCALE: 10:1

ALL CONNECTORS					
PIN #	PIN PURPOSE	PIN #	PIN PURPOSE	PIN #	PIN PURPOSE
1	SIGNAL A+	18	SIGNAL T+	35	SIGNAL J-
2	SIGNAL B+	19	SIGNAL U+	36	SIGNAL K-
3	SIGNAL C+	20	SIGNAL V+	37	SIGNAL L-
4	SIGNAL D+	21	SIGNAL W+	38	SIGNAL M-
5	SIGNAL E+	22	SIGNAL X+	39	SIGNAL N-
6	SIGNAL F+	23	SIGNAL Y+	40	SIGNAL P-
7	SIGNAL G+	24	SIGNAL Z+	41	SIGNAL R-
8	SIGNAL H+	25	SIGNAL BIAS V+	42	SIGNAL S-
9	SIGNAL I+	26	SIGNAL A-	43	SIGNAL T-
10	SIGNAL J+	27	SIGNAL B-	44	SIGNAL U-
11	SIGNAL K+	28	SIGNAL C-	45	SIGNAL V-
12	SIGNAL L+	29	SIGNAL D-	46	SIGNAL W-
13	SIGNAL M+	30	SIGNAL E-	47	SIGNAL X-
14	SIGNAL N+	31	SIGNAL F-	48	SIGNAL Y-
15	SIGNAL P+	32	SIGNAL G-	49	SIGNAL Z-
16	SIGNAL R+	33	SIGNAL H-	50	SIGNAL BIAS V-
17	SIGNAL S+	34	SIGNAL I-	51	SIGNAL BIAS GND

SIZE	CAGE NO		REV
A1	23835	10209721	C
SCALE 2:1	UNCLASSIFIED	SHEET 2 OF 7	

REV 2/00

AutoCAD GENERATED

10209721

Released on SEP-22-2004 by Richard G Bannister and signed by Mark A Weilert CHK, Dustin J Crum DEGN, Martin I Herman PEM, Mark A Weilert COGE, Richard G Bannister

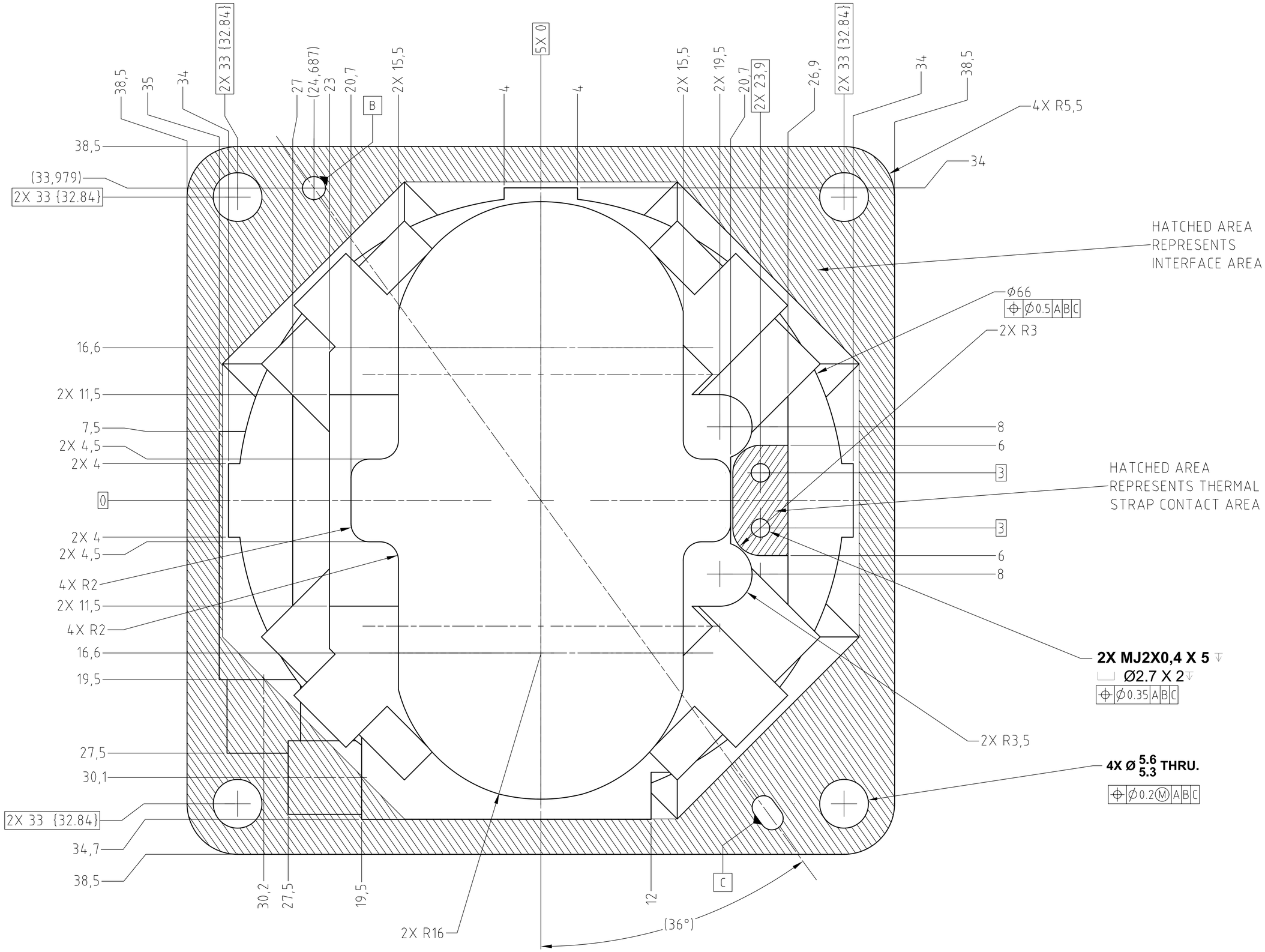

VIEW A-A

H4/SH2

SIZE	CAGE NO		REV
A1	23835	10209721	C
SCALE 2:1	UNCLASSIFIED	SHEET 3 OF 7	

REV 2/00

AutoCAD GENERATED

10209721

Released on SEP-22-2004 by Richard G Bannister and signed by Mark A Weilert CHK, Dustin J Crumb DEGN, Martin I Herman PEM, Mark A Weilert COGE, Richard G Bannister

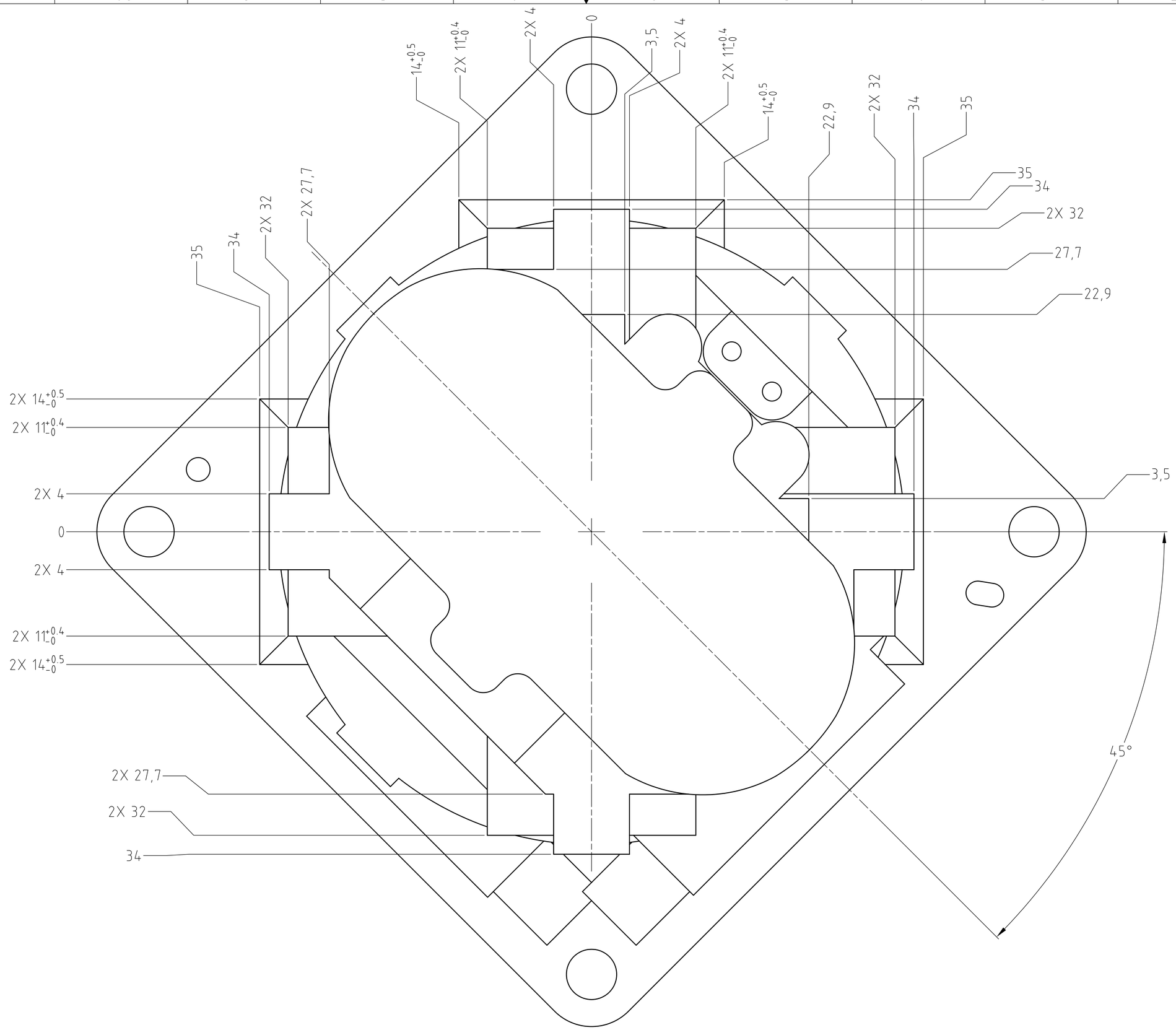

VIEW C-C ROTATED 45° CCW H4/SH2

SIZE	CAGE NO		REV
A1	23835	10209721	C
SCALE 2:1	UNCLASSIFIED	SHEET 4 OF 7	

REV 2/00

AutoCAD GENERATED

10209721

Released on SEP-22-2004 by Richard G Bannister and signed by Mark A Weilert CHK, Dustin J Crum DEGN, Martin I Herman PEM, Mark A Weilert COGE, Richard G Bannister

SUBSYSTEM INTERFACE DATA			
UNIT: P/LW			
NUMBER: 10209800-1			
FOCUS: 32.8			
CONNECTOR POSITIONS USED: J05, J06			
MECHANICAL CHARACTERISTICS			
MASS: 632 g			
C.O.G. LOCATION W.R.T. LOCATION HOLE:	X 34.4	Y 24.3	Z 6
MOMENT OF INERTIA:	I_X 772 Kg*mm^2	I_Y 1,145 Kg*mm^2	I_Z 1,423 Kg*mm^2
MECHANICAL INTERFACE MATERIAL: 7075 AL			
SURFACE FINISH DESCRIPTION: CHEM FILM GOLD			
TOTAL CONTACT AREA: 1783 mm^2			
R.M.S. ROUGHNESS OF CONTACT AREA: 3.2 uM			
THERMAL STRAP INTERFACE MATERIAL: CU 99.999% PURE			
THERMAL STRAP SURFACE FINISH DESCRIPTION: GOLD PLATED			
THERMAL STRAP CONTACT AREA: 57.5 mm^2			
THERMAL STRAP R.M.S. ROUGHNESS OF CONTACT AREA: 3.2 uM			

SUBSYSTEM INTERFACE DATA			
UNIT: P/MW			
NUMBER: 10209800-2			
FOCUS: 32.2			
CONNECTOR POSITIONS USED: J01, J02, J03, J04			
MECHANICAL CHARACTERISTICS			
MASS: 632 g			
C.O.G. LOCATION W.R.T. LOCATION HOLE:	X 34.4	Y 24.3	Z 8.5
MOMENT OF INERTIA:	I_X 764 Kg*mm^2	I_Y 1,152 Kg*mm^2	I_Z 1,428 Kg*mm^2
MECHANICAL INTERFACE MATERIAL: 7075 AL			
SURFACE FINISH DESCRIPTION: CHEM FILM GOLD			
TOTAL CONTACT AREA: 1783 mm^2			
R.M.S. ROUGHNESS OF CONTACT AREA: 3.2 uM			
THERMAL STRAP INTERFACE MATERIAL: CU 99.999% PURE			
THERMAL STRAP SURFACE FINISH DESCRIPTION: GOLD PLATED			
THERMAL STRAP CONTACT AREA: 57.5 mm^2			
THERMAL STRAP R.M.S. ROUGHNESS OF CONTACT AREA: 3.2 uM			

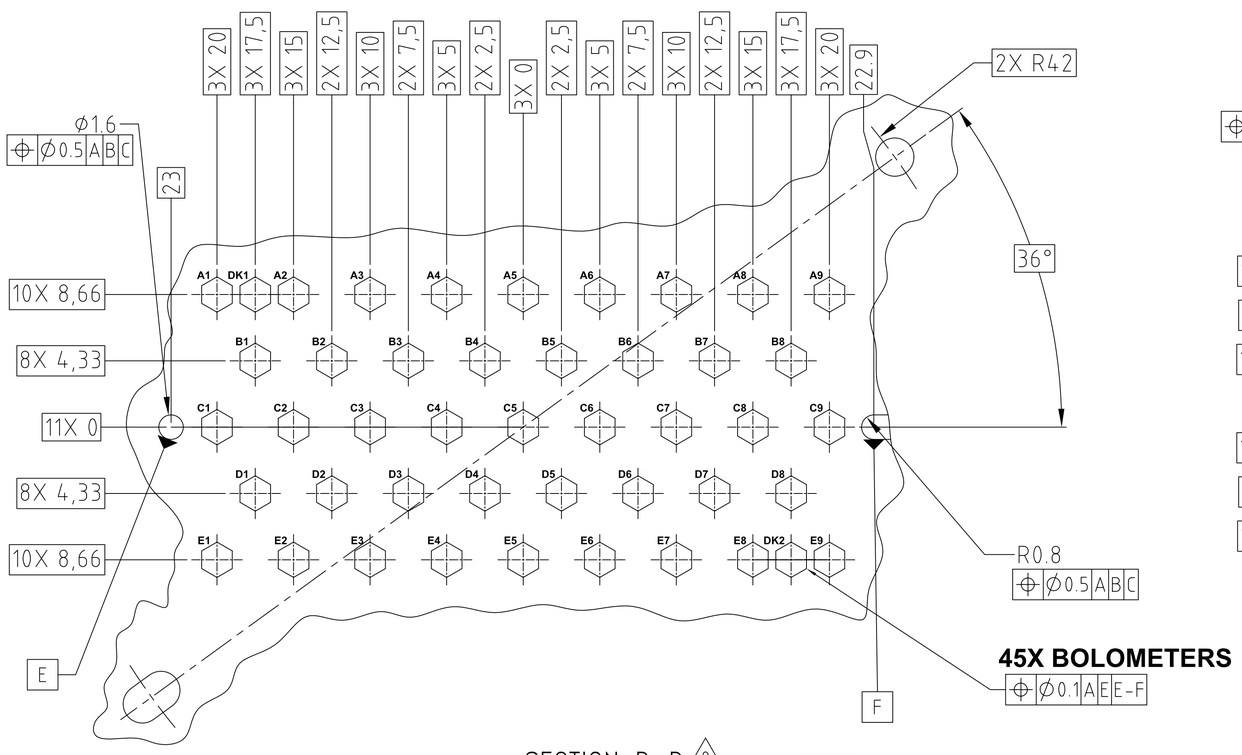

SECTION D-D 8
PHOTOMETER LONG WAVE
SCALE: 5:1

F9 / SH2

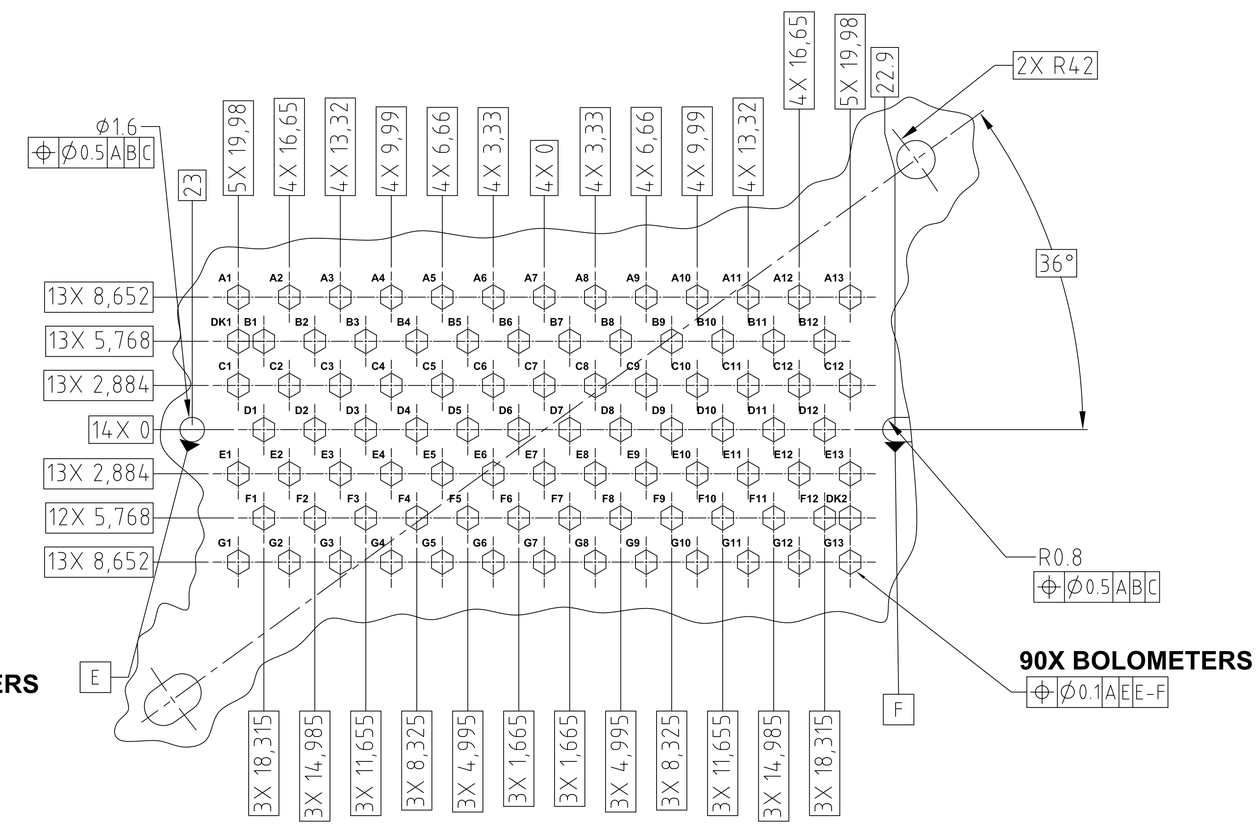

SECTION E-E 8
PHOTOMETER MEDIUM WAVE
SCALE: 5:1

G12 / SH2

SIZE	CAGE NO		REV
A1	23835	10209721	C
SCALE NOTED	UNCLASSIFIED	SHEET 5 OF 7	

REV 2/00

AutoCAD GENERATED

A1 10209721

Released on SEP-22-2004 by Richard G Bannister and signed by Mark A Weilert CHK, Dustin J Crum DEGN, Martin I Herman PEM, Mark A Weilert COGE, Richard G Bannister

SUBSYSTEM INTERFACE DATA					
UNIT: P/SW					
NUMBER: 10209800-3					
FOCUS: 23.8					
CONNECTOR POSITIONS USED: J01, J02, J03, J04, J05, J06					
MECHANICAL CHARACTERISTICS					
MASS: 600 g					
C.O.G. LOCATION W.R.T. LOCATION HOLE:	X	34.5	Y	24.3	Z 6.5
MOMENT OF INERTIA:	I_x	712 Kg*mm^2	I_Y	1,074 Kg*mm^2	I_Z 1,364 Kg*mm^2
MECHANICAL INTERFACE MATERIAL: 7075 AL					
SURFACE FINISH DESCRIPTION: CHEM FILM GOLD					
TOTAL CONTACT AREA: 1783 mm^2					
R.M.S. ROUGHNESS OF CONTACT AREA: 3.2 uM					
THERMAL STRAP INTERFACE MATERIAL: CU 99.999% PURE					
THERMAL STRAP SURFACE FINISH DESCRIPTION: GOLD PLATED					
THERMAL STRAP CONTACT AREA: 57.5 mm^2					
THERMAL STRAP R.M.S. ROUGHNESS OF CONTACT AREA: 3.2 uM					

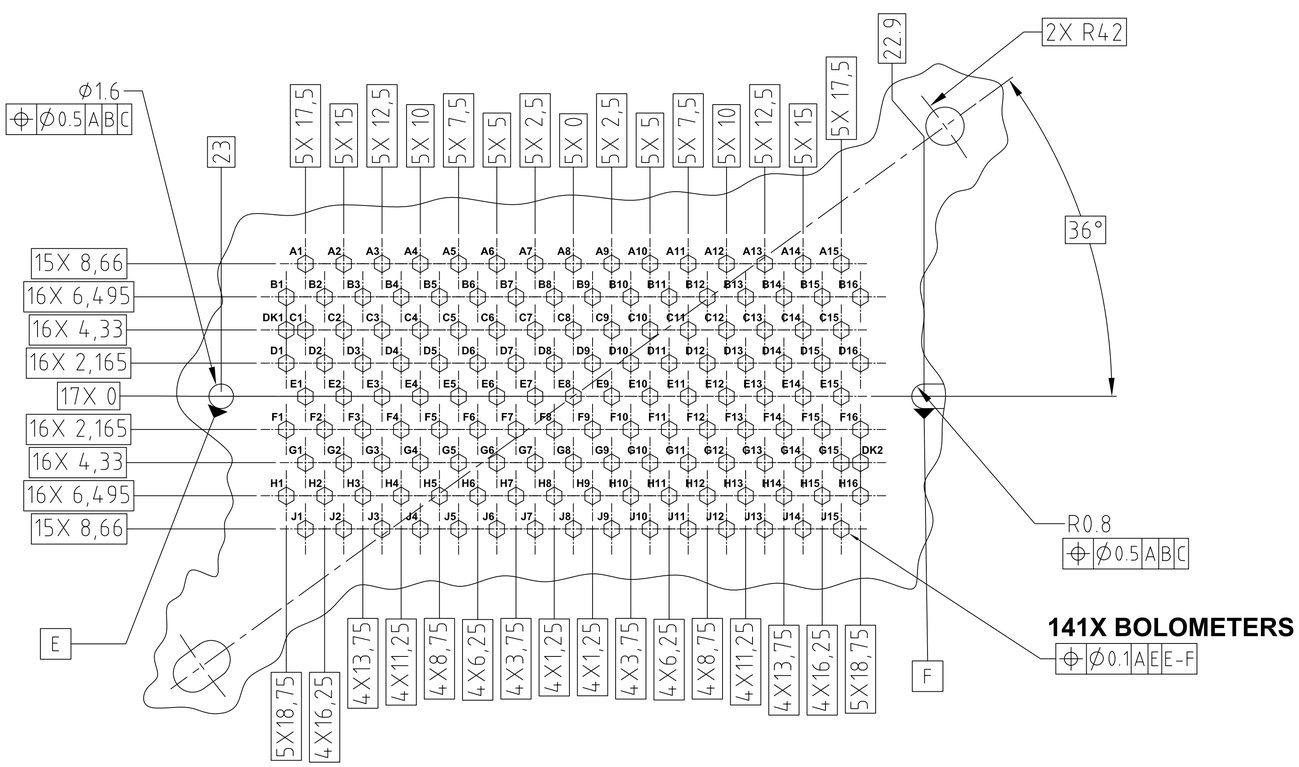

SECTION E-E (8)
PHOTOMETER SHORT WAVE
SCALE: 5:1

G12 / SH2

SIZE	CAGE NO		REV
A1	23835	10209721	C
SCALE NOTED		UNCLASSIFIED	SHEETS OF7

REV 2/00

AutoCAD GENERATED

10209721

Released on SEP-22-2004 by Richard G Bannister and signed by Mark A Weilert CHK, Dustin J Crum DEGN, Martin I Herman PEM, Mark A Weilert COGE, Richard G Bannister

SUBSYSTEM INTERFACE DATA			
UNIT: S/LW			
NUMBER: 10209800-4			
FOCUS: 36.9			
CONNECTOR POSITIONS USED: J05			
MECHANICAL CHARACTERISTICS			
MASS: 550 g			
C.O.G. LOCATION W.R.T. LOCATION HOLE:	X 34.5	Y 24.1	Z 4.4
MOMENT OF INERTIA:	I_X 665 Kg*mm^2	I_Y 990 Kg*mm^2	I_Z 1,239 Kg*mm^2
MECHANICAL INTERFACE MATERIAL: 7075 AL			
SURFACE FINISH DESCRIPTION: CHEM FILM GOLD			
TOTAL CONTACT AREA: 1783 mm^2			
R.M.S. ROUGHNESS OF CONTACT AREA: 3.2 uM			
THERMAL STRAP INTERFACE MATERIAL: CU 99.999% PURE			
THERMAL STRAP SURFACE FINISH DESCRIPTION: GOLD PLATED			
THERMAL STRAP CONTACT AREA: 57.5 mm^2			
THERMAL STRAP R.M.S. ROUGHNESS OF CONTACT AREA: 3.2 uM			

SUBSYSTEM INTERFACE DATA			
UNIT: S.SW			
NUMBER: 10209800-5			
FOCUS: 26.7			
CONNECTOR POSITIONS USED: J05, J06			
MECHANICAL CHARACTERISTICS			
MASS: 510 g			
C.O.G. LOCATION W.R.T. LOCATION HOLE:	X 34.6	Y 24.2	Z 6
MOMENT OF INERTIA:	I_X 628 Kg*mm^2	I_Y 936 Kg*mm^2	I_Z 1,189 Kg*mm^2
MECHANICAL INTERFACE MATERIAL: 7075 AL			
SURFACE FINISH DESCRIPTION: CHEM FILM GOLD			
TOTAL CONTACT AREA: 1783 mm^2			
R.M.S. ROUGHNESS OF CONTACT AREA: 3.2 uM			
THERMAL STRAP INTERFACE MATERIAL: CU 99.999% PURE			
THERMAL STRAP SURFACE FINISH DESCRIPTION: GOLD PLATED			
THERMAL STRAP CONTACT AREA: 57.5 mm^2			
THERMAL STRAP R.M.S. ROUGHNESS OF CONTACT AREA: 3.2 uM			

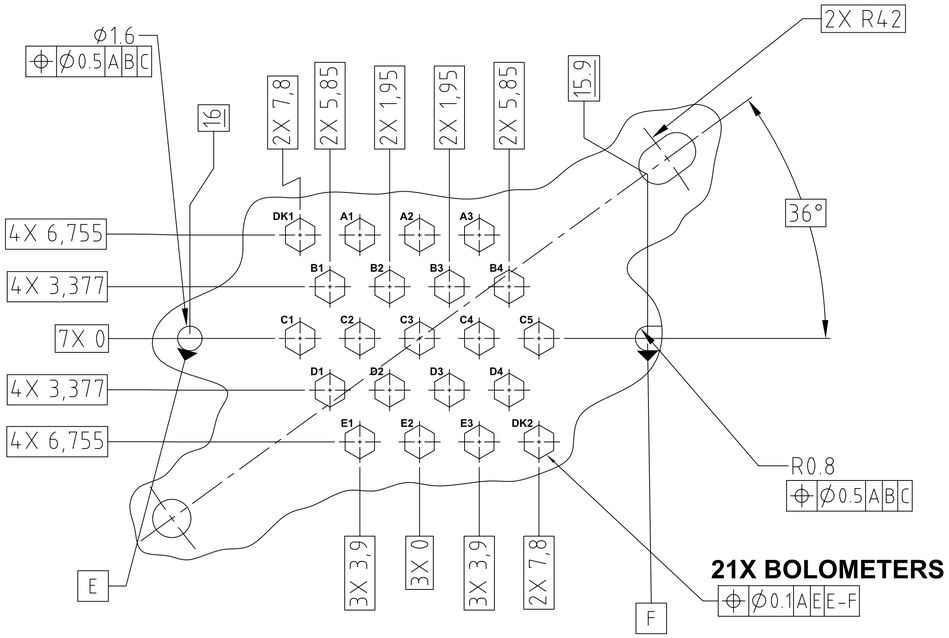

SECTION D-D 8
SPECTROMETER LONG WAVE
SCALE: 5:1

F9/SH2

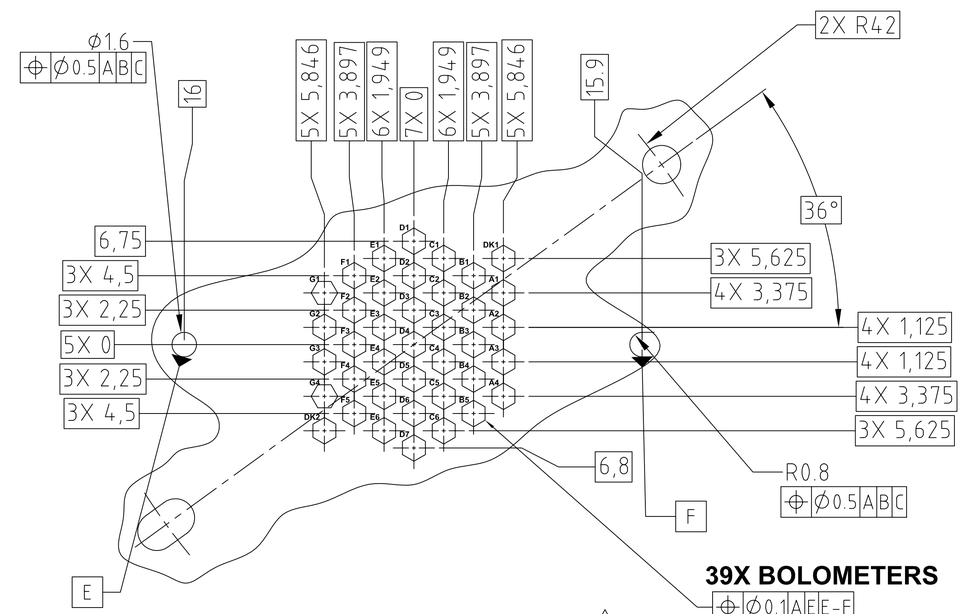

SECTION E-E 8
SPECTROMETER SHORT WAVE
SCALE: 5:1

G12/SH2

SIZE	CAGE NO		REV
A1	23835	10209721	C
SCALE 5:1	UNCLASSIFIED	SHEET 7 OF 7	

REV 2/00

AutoCAD GENERATED

A1 10209721

Released on SEP-22-2004 by Richard G Bannister and signed by Mark A Weilert CHK, Dustin J Crumb DEGN, Martin I Herman PEM, Mark A Weilert COGE, Richard G Bannister

REVISIONS												
LTR	ZONE	DESCRIPTION	DWN	CHK	STRUCT	MATL	TANK CHK		ENGR	ENGR CHK	QLTY ACCP	RELEASE DATE
A		INITIAL RELEASE	SEE TITLE BLOCK								RGB	3/18/03
B		INCORPORATED ECR 283825	2	DJC						REW	RGB	07/02/04
C		INCORPORATED RAL ECR HR-DP-JPL-ECR-005	3									

ARRAY DEFINITION		10209800-1 P/LW		10209800-2 P/MW				10209800-3 P/SW						10209800-4 S/LW	10209800-5 S/SW	
BDA CONNECTOR		J05	J06	J01	J02	J03	J04	J01	J02	J03	J04	J05	J06	J05	J05	J06
PIXEL MAP	A	R1	E1	A7	E7	A13	R1	D6	F12	R1	E1	D11	G5	R1	R1	—
	B	A8	E2	A6	D7	T1	G1	B6	J11	D16	F1	A10	H6	T1	A4	—
	C	A7	E3	B6	F7	B12	T2	C5	E12	T1	T2	E10	J6	C1	A3	—
	D	A6	E4	C7	E8	C13	E1	A5	H12	B16	H1	C10	F6	DK1	A2	—
	E	A9	D1	A5	G8	A12	D1	E5	G12	C15	G1	B10	G6	B1	A1	—
	F	C9	D2	B5	F8	D12	F1	B5	F13	A15	J1	D10	H7	D1	DK1	—
	G	B8	D3	C6	E9	C12	E2	D5	E13	D15	H2	A9	F7	E1	B3	G3
	H	B7	D4	D6	G9	B11	G2	C4	J12	B15	F2	E9	J7	A1	B2	G4
	I	C7	C1	B4	D9	A11	F2	A4	H13	C14	J2	C9	G7	C2	B1	DK2
	J	B5	C3	C5	F9	E13	G3	D4	G13	D14	G2	B9	H8	D2	C3	F5
	K	B6	C5	D4	E10	D11	E3	B4	F14	A14	H3	D9	F8	B2	C2	F4
	L	A5	T2	A4	G10	C11	D3	C3	E14	A13	J3	A8	G8	E2	C1	E6
	M	T1	E5	C4	F10	B10	F3	B3	J13	B14	E2	C8	J8	A2	D3	E5
	N	B4	C6	B3	E11	A10	G4	A3	H14	C13	F3	E8	F9	C3	D2	E4
	P	C4	C8	C3	G11	D10	E4	A2	G14	B13	G3	D8	H9	D3	D1	D7
	R	B3	D5	B2	F11	B9	F4	D3	J14	D13	H4	B8	G9	B3	E3	D6
	S	C2	D6	D2	E12	C10	E5	C2	F15	A12	J4	C7	J9	E3	E2	D5
	T	B2	D7	A3	G12	C9	D5	B2	H15	C12	E3	E7	F10	C4	E1	D4
	U	B1	D8	A2	F12	A9	F5	D2	J15	D12	F4	A7	H10	DK2	F3	C6
	V	A3	E7	C2	G13	B8	G5	A1	G15	B12	G4	D7	G10	D4	F2	C5
	W	A4	E6	B1	DK2	A8	E6	C1	H16	E11	H5	B7	F11	C5	F1	C4
	X	A1	E8	A1	T/C	D8	G6	B1	DK2	A11	E4	C6	J10	B4	G1	B5
	Y	DK1	DK2	DK1	T/C	C8	F6	DK1	F16	C11	J5	E6	H11	A3	T1	B4
	Z	A2	E9	C1	T/C	B7	G7	D1	E15	B11	F5	A6	G11	T2	G2	T2
JFET INTERFACE	AA	HSJFP07 J14	HSJFP08 J16	HSJFP11 J22	HSJFP12 J24	HSJFP09 J18	HSJFP10 J20	HSJFP03 J06	HSJFP04 J08	HSJFP01 J02	HSJFP02 J04	HSJFP05 J10	HSJFP06 J12	HSJFS03 J06	HSJFS01 J02	HSJFS02 J04
	BB	HSJFP07 J13	HSJFP08 J15	HSJFP11 J21	HSJFP12 J23	HSJFP09 J17	HSJFP10 J19	HSJFP03 J05	HSJFP04 J07	HSJFP01 J01	HSJFP02 J03	HSJFP05 J09	HSJFP06 J11	HSJFS03 J05	HSJFS01 J01	HSJFS02 J03
	CC	HSJFP07 J35	HSJFP08 J36	HSJFP11 J39	HSJFP12 J40	HSJFP09 J37	HSJFP10 J38	HSJFP03 J31	HSJFP04 J32	HSJFP01 J29	HSJFP02 J30	HSJFP05 J33	HSJFP06 J34	HSJFS03 J13	HSJFS01 J11	HSJFS02 J12
	DD	HSJFP07 J47	HSJFP08 J48	HSJFP11 J51	HSJFP12 J52	HSJFP09 J49	HSJFP10 J50	HSJFP03 J43	HSJFP04 J44	HSJFP01 J41	HSJFP02 J42	HSJFP05 J45	HSJFP06 J46	HSJFS03 J17	HSJFS01 J15	HSJFS02 J16
FPU HARNESS		7	8	11	12	9	10	3	4	1	2	5	6	15	13	14
CRYO HARNESS		6	6	4	4	5	5	8	8	9	9	7	7	1	2	2

7. INFORMATION IN THIS DOCUMENT IS ALSO CONTAINED IN THE HARNESS DEFINITION DOCUMENT, RAL DOCUMENT SPIRE-RAL-PRJ-000608. IN AREAS WHERE THERE ARE CONFLICTS, THE HARNESS DEFINITION DOCUMENT TAKES PRECEDENCE.

6. ESD PROTECTION RESISTORS ARE 7 TIMES THE SOURCE RESISTOR.

5. GROUND WIRE TO BE TERMINATED AT INSTRUMENT INTEGRATION. WIRE WILL HAVE A MINIMUM LENGTH OF 150MM.

4. UNLESS OTHERWISE NOTED, ⏚ IS JFET CHASSIS GROUND.

3. JFET MEMBRANE HEATER IS 0.0204 TIMES THE SOURCE RESISTOR.

2. ALL RESISTORS HAVE A TOLERANCE OF ±40%.

1. THIS TECHNICAL DATA IS EXPORT CONTROLLED UNDER U.S. LAW AND IS BEING TRANSFERRED BY JPL TO PPARC PURSUANT TO THE NASA / PPARC LETTER OF AGREEMENT WHICH ENTERED INTO FORCE ON DECEMBER 2, 1999. THIS TECHNICAL DATA IS TRANSFERRED TO PPARC FOR USE EXCLUSIVELY ON THE NASA/PPARC SPIRE ON FIRST COOPERATIVE PROJECT, MAY NOT BE USED FOR ANY OTHER PURPOSE, AND SHALL NOT BE RE-TRANSFERRED OR DISCLOSED TO ANY OTHER PARTY WITHOUT THE PRIOR WRITTEN APPROVAL OF NASA.

NOTES: UNLESS OTHERWISE SPECIFIED

QTY REQD	ITEM NO	REF DES	CAGE NO	PART OR IDENTIFYING NO	NOMENCLATURE OR DESCRIPTION	SPECIFICATION	MATERIAL OR NOTE	ZONE

PARTS LIST

MATERIAL

METRIC

THIRD ANGLE PROJECTION

NEXT ASSEMBLY: SPIRE
USED ON:
APPLICATION

UNLESS OTHERWISE SPECIFIED DIMENSIONS ARE IN MILLIMETERS
LINEAR TOLERANCES:
DIM ± 0.1
OVER 50-120 ± 0.3
OVER 120-315 ± 0.5
OVER 315-1000 ± 0.8
OVER 1000 ± 1.0
ANGULAR TOLERANCES:
± 0°30'
MACHINE FINISH 32
MACHINE FINISH
DO NOT SCALE DRAWING
INTERPRET DWG PER ANSI Y14.100M

CONTRACT NO: GENERAL

APPD	DATE
DWN D CRUMB	2/28/03
CHK J BOCK	3/17/03
STRUCT	
MATL S GRIFFIN	2/11/03
TANK CHK B SVENVARD	2/11/03
RAL J DELBERSFELD	2/10/03
PEM G LILSENTHAL	3/17/03
ENGR L HUSTED	2/28/03

JET PROPULSION LABORATORY
CALIFORNIA INSTITUTE OF TECHNOLOGY
PASADENA, CA 91109
RELEASED THROUGH EDMS

WIRING SCHEMATIC, SPIRE

SIZE A1X3 | CAGE NO 23835 | 10209725 | REV C

SCALE NONE | UNCLASSIFIED | SHEET 1 OF 1

REV 2/00

FRAME	CAGE NO	DRAWING NUMBER	REV	SH NO
1 or 2	23835	10209725	C	1

10209725 | A1X3 | C | 1 | 34

10509252 | SIGNAL CONDITIONED

Released on JUL-15-2004 by Richard G Bannister and signed by James J Bock CHK, Dustin J Crumb DEGN, Martin I Herman PEM, Mark A Weilert COGE, Richard G Bannister

Backshort Data

---TO BE PROVIDED ---

Alignment Measurement Summary
for
PFM PSW BDA
10209800-3 SN013

WARM ALIGNMENT MEASUREMENTS:

Position:

Center of feed horn entrance plane with respect to the alignment pin hole, mounting face and alignment slot as defined in the ICD drawing 10209721 sht. 3 (see Figure 1 below)

(x,y,z) = (24.745, -33.737, 25.286) (all distances in mm)

Nominal x,y position:

(x_{nom},y_{nom}) = (24.687, -33.979)

x-y shift from nominal:

(dx,dy) = (0.058, 0.242)

The z position of the suspended part referenced to the 34.2 mm nominal dimension on ICD pg 2, zone G9:

Measured z dimension:

34.235 mm

Z shift from nominal

0.035 mm

Rotation:

Feed horn rotation in xy plane (top view, as in ICD, sht. 3)

0.004° counterclockwise

Normal vector to feedhorn entrance plane:

(-0.00346, 0.00959, 0.99995)

which is 0.58° from the z direction.

COLD ALIGNMENT MEASUREMENTS:

(BDA cooled from RmT to approximately 7-8 K)

Shifts on Cooling:

XY Shift of center of 300 mK stage on cooling (with respect to flange alignment pin hole):

(dx, dy) =(-0.13,0.09)

300 mK stage rotation in xy plane on cooling (top view):

< 0.03° degrees (repeatability not good, values scattered below this limit)

The suspended portion of the BDA shifted approximately .06 mm down in the z axis on cooling, moving closer to the mounting flange. The rotation about the x-axis on cooling was not reliably measured. We have no information about rotation in the y axis on cooling.

These shifts are not accurate to better than ±40 microns, and the repeatability over multiple cooldowns is not well known.

Net Result:

xy cold position relative to alignment pin hole:

(x, y) = (24.62, -33.65)

Rotation of feedhorn relative to xy axes (top view) is zero to within 0.03°.

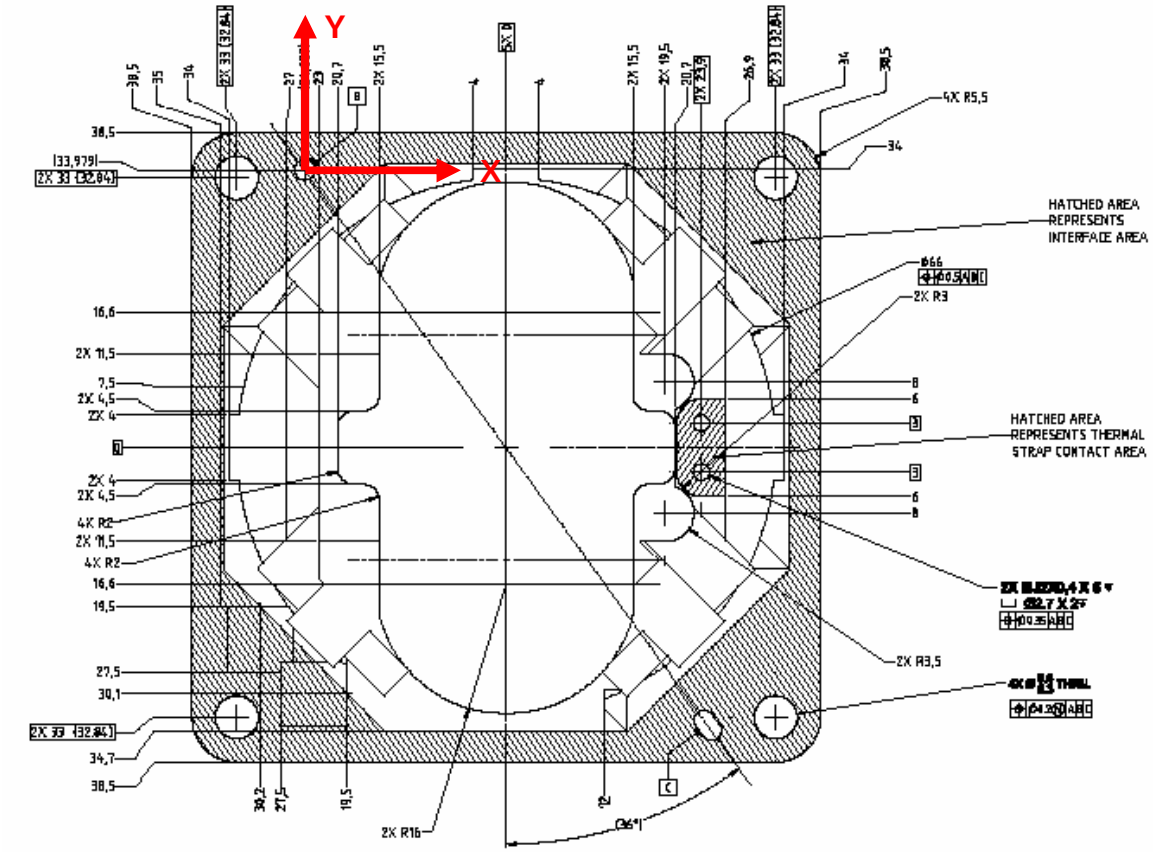

Figure 1 (excerpt from ICD dwg 10209721, with coordinate axes shown)

CMI *Advancing Ultra-Precision Manufacturing*

Custom Microwave Inc.
940 Boston Avenue
Longmont, CO 80501

CERTIFICATE OF COMPLIANCE

JPL	1249812
CUSTOMER	PURCHASE ORDER NUMBER
4210	10209833 REV X8
INVOICE NUMBER	PART NUMBER(S)
P8758-01	1 EA.
LOT NUMBER(S)/SERIAL	QUANTITY

Custom Microwave, Inc. certifies that all materials and processes used in the manufacturing of supplied parts conforms in all respects to the above mentioned purchase order, specification and/or drawing requirements and that documents are on file to substantiate this and are available for examination. Custom Microwave, Inc. further certifies that no parts supplied against this purchase order contain mercury or have come in contact with mercury or mercury compounds nor do they contain beryllium or beryllium compounds except beryllium copper.

Authorized Signature Quality Assurance Manager	5/13/04 Date

CMI CAGE CODE: 5Y549

MATERIALS:

COPPER C101 HOUSING: RM#997
BRASS WIRE RM# 1200
SN96 SOLDER: RM#1294

PROCESSES:

COPPER ELECTROFORM CMI COPPER # 3
GOLD PLATE PER MIL-G-45204, TYPE 3, CLASS 1, GRADE A

NCR # 13106, 13111 attached

CMI *Advancing Ultra-Precision Manufacturing*

Custom Microwave Inc.
940 Boston Avenue
Longmont, CO 80501

NON CONFORMANCE REPORT

1. NCR #: 13106

2. Pg. 1 of 1

3. PART #:	REV.	4. PART DESCRIPTION:	5. PROJ. #:	6. CUSTOMER:
10209833	X8	FEEDHORN	P8758	JPL

7. SERIAL # OR BATCH #	8. VENDOR NAME	9. VEND CERT#	10. VEND P.O #	11. VEND #
-001	—	—	—	—

8. DETAILS OF NON CONFORMANCE

12. ITEM #	13. DESCRIPTION Dwg Zone, Spec. Para, Ser. no.	14. DISCREPANCY	15. TEAM #	16. QTY	17. DEFECT CODE
1		DATUM HOLES ARE OUT OF LOCATION TO FEEDHORN PATTERN	7	1	O.S.D.

18. ORIGINATOR: (PRINT & SIGN)	DATE:	19. OPERATION DETECTED AT:	20. WORK AREA DETECTED AT:
TRY GEORGE [signature]	4-30-04	175	INSPECTION

21. ITEM #	22. OPER #	23. DISPOSITION	24. STAMP/ SIGN
1		USE AS IS	[signature]

25. RTV Qty:	26. SCRAP Qty:	27. REWORK Qty:	28. STANDARD REPAIR Qty:	29. USE AS IS Qty:	30. REPAIR Qty:
—	—	—	—	1	—

31. CLASSIFICATION CRITICAL ☐ MAJOR ☐ MINOR ☒

32. CUSTOMER APPROVAL REQUIRED YES ☒ NO ☐

33. CORRECTIVE ACTION REQUIRED. YES ☐ NO ☒

34. Project Leader:	DATE:	35. Customer Approval:	DATE:	36. Quality Assurance:	DATE
[signature]	4/30/04	SEE BELOW		[signature]	4-30-04

37. CAUSE:
DATUMS WERE NOT MACHINED IN CORRECT LOCATION.

38. CAR#:	39. ACTIONEE:	40. ASSIGNED DATE:

41. CORRECTIVE ACTION:
Part is acceptable for use as-is
[signature]

42. EFFECTIVITY DATE/ (Lot#/S/N)

43. DATE COMPLETED:	44. APPROVED BY:	45. CACODE#:

FORM 0001

CMI *Advancing Ultra-Precision Manufacturing*

Custom Microwave Inc.
940 Boston Avenue
Longmont, CO 80501

NON CONFORMANCE REPORT

1. NCR #: 13111

2. Pg. 1 of 2

3. PART #:	REV.	4. PART DESCRIPTION:	5. PROJ. #:	6. CUSTOMER:
10209833	X8	FEEDHORN - P/SW BDA	P8758	JPL

7. SERIAL # OR BATCH #	8. VENDOR NAME	9. VEND CERT#	10. VEND P.O #	11. VEND #
-001	—	—	—	—

8. DETAILS OF NON CONFORMANCE

12. ITEM #	13. DESCRIPTION Dwg Zone, Spec. Para, Ser. no.	14. DISCREPANCY	15. TEAM #	16. QTY	17. DEFECT CODE
1	NOTE 8	141.3g	8	1	O.S.D.
2	WAVEGUIDE PLATING	SHALLOW DIMPLES	6	1	O.S.D.
3	D-2Ø .0176/.0166 (X139)	.1761 — .1868	4	27	O.S.D.
4	D-2, Ø Ø 0.04 A B(M) D(M) (X139)	.0401 - .0743	7	44	O.S.D.

18. ORIGINATOR: (PRINT & SIGN)	DATE:	19. OPERATION DETECTED AT:	20. WORK AREA DETECTED AT:
TROY GEORGE	5-7-04	175	INSPECTION

21. ITEM #	22. OPER #	23. DISPOSITION	24. STAMP/ SIGN
1-7		REQUEST USE AS IS	DS

25. RTV Qty:	26. SCRAP Qty:	27. REWORK Qty:	28. STANDARD REPAIR Qty:	29. USE AS IS Qty:	30. REPAIR Qty:
—	—	—	—	1	—

31. CLASSIFICATION CRITICAL ☒ MAJOR ☐ MINOR ☐

32. CUSTOMER APPROVAL REQUIRED YES ☒ NO ☐

33. CORRECTIVE ACTION REQUIRED. YES ☐ NO ☒

34. Project Leader:	DATE:	35. Customer Approval:	DATE:	36. Quality Assurance:	DATE
[signature]	5/7/04	SEE BELOW		[signature]	5-7-04

37. CAUSE:

MANUFACTURING ERRORS

38. CAR#:	39. ACTIONEE:	40. ASSIGNED DATE:

41. CORRECTIVE ACTION:

Part is acceptable for use as-is

Mark Weibel

42. EFFECTIVITY DATE/ (Lot#/S/N)

43. DATE COMPLETED:	44. APPROVED BY:	45. CACODE#:

FORM 0001

CMI *Advancing Ultra-Precision Manufacturing*

Custom Microwave Inc.
940 Boston Avenue
Longmont, CO 80501

NON CONFORMANCE REPORT

1. NCR #: 13111

2. Pg. 2 of 2

3. PART #	REV.	4. PART DESCRIPTION	5. PROJ. #	6. CUSTOMER
10209833	X8	FEEDHORN - P/SW BDA	P8758	JPL

7. SERIAL # OR BATCH #	8. VENDOR NAME	9. VEND CERT#	10. VEND P.O #	11. VEND #
-001	—	—	—	—

8. DETAILS OF NON CONFORMANCE

12. ITEM #	13. DESCRIPTION Dwg Zone, Spec. Para, Ser. no.	14. DISCREPANCY	15. TEAM #	16. QTY	17. DEFECT CODE
5	D-7, 1.8995 +.02/-0	1.8994 -1.8968	4	1	O.S.D.
6	D-10, 11/.003 / A	.0036	4	1	O.S.D.
7	F-7, Ø 2.375/2.405 (139X)	2.4195 -2.4330	8	139	O.S.D.

18. ORIGINATOR: (PRINT & SIGN)	DATE:	19. OPERATION DETECTED AT:	20. WORK AREA DETECTED AT:

21. ITEM #	22. OPER #	23. DISPOSITION	24. STAMP/ SIGN

25. RTV Qty:	26. SCRAP Qty:	27. REWORK Qty:	28. STANDARD REPAIR Qty:	29. USE AS IS Qty:	30. REPAIR Qty:
—	—	—	—	1	—

31. CLASSIFICATION	32. CUSTOMER APPROVAL REQUIRED	33. CORRECTIVE ACTION REQUIRED
CRITICAL ☐ MAJOR ☐ MINOR ☒	YES ☒ NO ☐	YES ☐ NO ☒

34. Project Leader:	DATE:	35. Customer Approval:	DATE:	36. Quality Assurance:	DATE
[signature]	5/7/04			[signature]	5-7-04

37. CAUSE:

38. CAR#:	39. ACTIONEE:	40. ASSIGNED DATE:

41. CORRECTIVE ACTION:

42. EFFECTIVITY DATE/ (Lot#/S/N)

43. DATE COMPLETED:	44. APPROVED BY:	45. CACODE#:

FORM 0001

CUSTOMER	SHIP DATE	GROSS WEIGHT	QUOTE	
19698	11/21/00 SHP	86	18-757538-3	OF 3

PACKING LIST

TEST RESULTS

BILL TO: CUSTOM MICROWAVE INC

WORK ORDER: 331844 **

ORDER DATE: 11/17/00 ORD

DELIVERY DATE	SHIP BRANCH	SELL BRANCH	WORK ORDER
11/27/00 DEL	03-CLE	18-STL	331844

SHIP TO

CUSTOM MICROWAVE INC 01
340 BOSTON AVENUE
LONGMONT CO 80501

THYSSEN

COPPER AND BRASS SALES
AIN PLASTICS
TMX

5755 GRANT AVENUE
CLEVELAND OH 44105-5635

CUSTOMER P.O. NUMBER	TERRITORY	ENTRY ID
11725	03	04JDF

BUYER	INSIDE SALES
MIKE	04JDF JOHN D. FITZPATRICK

BUYER TELEPHONE	INSIDE SALES TELEPHONE
(303) 651-0707	(847) 490-9870 239

SHIP VIA	SHIPPING STATUS		
INTERNAL	COMPLETE	PARTIAL	CANCEL
	X		

TO CUSTOMER	FOB
COMMON/FRT-	ORIG

BILL OF LADING	FREIGHT STATUS
	PPD

CUSTOMER SIGNATURE: DATE:

QUANTITY	ORDERED	SHIPPED
INVENTORY	69.92 LB	70.00
BILLING	1.00 PC	1.00
WAREHOUSE	1.00 PC	

PART DESCRIPTION 185966-9

CR COPPER PLATE C11000
1-1/2 CUT
SAW 12" (+.063,-0) X 12" (+.063,-0)
Test Results Attn to: QA Department.

RM 997

PACKED WITH OTHER GOODS

FINISHED GOODS LOCATION

FULL	SCRAP	FILLED BY	PACKED BY	Q/A AUDIT
		GIL		

CUSTOMER RECEIVING HOURS

MAXIMUM SKID WEIGHT

LOADING INSTRUCTIONS

MAXIMUM BUNDLE WEIGHT

Rack Location:

Avail 2516
Product Code: 0303

BOXES	BARS	CASES	CUSHP	PKGS	SKIDS	BDLS	TUBES	CTNS	FLAT	COILS
					1					

SPECIAL INSTRUCTIONS

INSPECTION RECORD

TEST RESULTS -----
CERTIFICATE OF COMPLIANCE
We hereby certify that mercury or any of its compounds are not used in the processing and distribution of our products. We hereby certify that the material above complies with the following specifications:
ASTM-B152-97A

TAG NUMBER	QUANTITY	UNIT	VENDOR	VENDOR PO	HEAT/LOT
733565	1.00	PC	REVERECOP	0862732	00288201

GARY W. STAMM - General Manager: CLEVELAND

PRINTED 11/17/00 12:50 AM CONTROL NO 00073

COPPER AND BRASS SALES, INC. / AIN PLASTICS, INC. ARE SUBSIDIARIES OF THYSSEN INC., N.A.
TMX IS A DIVISION OF THYSSEN INC., N.A.

REVERE COPPER PRODUCTS, INC.

ADDRESS INQUIRY CATHY ST.THOMAS
ONE REVERE PARK
ROME, NY 13440-5561

WANTED

DPT 11

PAGE 1

REVERE NO. 74450

CUSTOMER DATE	CUSTOMER ORDER NUMBER
04/18/2000	862732

CUSTOMER CODE	DIV			SALESMAN	IND. CODE	CL	KS	TAX	TO	
148035004	RM		.	21		3	1		0	

****
* CERTIFICATE OF TEST *
****

SOLD TO
TMX/COPPER AND BRASS SALES
ATTN: ACCOUNTS PAYABLE
400 RENAISSANCE CENTER - SUITE 1700
DETROIT MI 48243

SHIP TO
TMX/COPPER AND BRASS SALES
5755 GRANT AVENUE
CLEVELAND OH 44105

02772 REVERE C11000 CR CU PLATE
TO ASTM B-152

1.500" X 36.5" X 144.5"

NET WEIGHT - 7727 CUST PART#

The goods described herein were produced in compliance with all applicable requirements of sections 6, 7 and 12 of the Fair Labor Standards Act, as amended, and of regulations and orders of the United States Department of Labor issued under section 14 thereof.

FOB MILL PREPAID
VIA
MARK 185966-9

ITEM NO.	DESCRIPTION	QTY. ORD.	CASE NO.	NO. OF PCS.	GROSS WT.	TARE	NET WT.	HEAT NO.

CHEMICAL ANALYSIS

HEAT#/LOT	CU
00287001	99.98%
00288201	99.99%

CU INCLUDES- +Ag

997

PHYSICAL ANALYSIS

HEAT#/LOT	HARDNESS RF	TENSILE KSI	COND %IACS
00287001	79	34.5	98.5
00288201	80	33.5	98.3

Date 11.21.00
Customer CUSTOM MICROWAVE
These Tests Are For Material Shipped On
Your Order 11725
From Copper And Brass Sales, Inc.
INV/WO 931844
WGT PCS
Jim L Maurer CC

WE CERTIFY THAT THE FOREGOING RESULTS ARE CORRECT AND THAT THIS MATERIAL HAS BEEN PROCESSED, INSPECTED, AND TESTED IN COMPLIANCE WITH THE REQUIREMENTS OF YOUR PURCHASE ORDER AND SPECIFICATIONS. THIS MATERIAL HAS NOT COME IN CONTACT WITH FREE MERCURY DURING THE MANUFACTURING PROCESS.

RORY MONTGOMERY LABORATORY MANAGER

PART/COMP. CODE SIGNATURE ON FILE PACKING LIST

SHIPPER

EDM Supplies, Inc.
9806 Everest Street
Downey, CA 90242-3199
Phone: 562-803-6563
Fax: 562-803-4281

Sales Order Number 250913
Shipper Number 2
Ship Date 06/28/02
Page 1

SOLD TO
103884
CUSTOM MICROWAVE
940 BOSTON AVE
LONGMONT CO 80501

BILL TO
103884
CUSTOM MICROWAVE
940 BOSTON AVE
LONGMONT CO 80501

FOB: DOWNEY Terms: NET 30 Freight: PREPAID AND ADD

Customer's PO: 12557 Resale No:

LI#	Order/Qty	UM	Part/Description	Units/Pkg	Ship Qty	Lot Number
1	10	EA	C22-023 .023 DIA. X 12 PBR Rm 1200		5	0
2	10	EA	C22-024 .024 DIA. X 12 PBR Rm 1201		10	0
5	10	EA	C22-027 Rm 1204 .027 DIA. X 12 PBR *****CERTIFICATIONS***** WE HEREBY CERTIFY THIS MATERIAL TO BE PRECISION BRASS ROD, ALLOY 260 SIGNED: Lisa Boudreau ORDERED BY DAN JONGSMA		4	0

Ship Via: UPS GRND PPB Waybill No:

SHIP TO: CUSTOM MICROWAVE
940 BOSTON AVE
LONGMONT CO 80501

EIS Phoenix
1524 West 14th Street Suite 106
TEMPE AZ 85281
USA

Packing List # 3325511
Cust. Phone: 3036510707
Page: 1 / 1

Sold To: CUSTOM MICROWAVE
940 BOSTON AVENUE
LONGMONT CO 80501
USA

Ship To: CUSTOM MICROWAVE
940 BOSTON AVENUE
LONGMONT CO 80501
USA

RM- 1294

T

Date: 06/13/03 11:40:35
Print: 06/13/03 11:40:35
Sales Order #: 16511107

CUSTOMER ORDER NO.						
13019						
PACKING LIST NO. 3325511	ORDER DATE 06/13/03	CUST NO. 10498	SALESMAN Sales Rep: Robin Griffo Phone #:6023253990	PCS.	WT.	BILL OF LADING 3325511
SHIP VIA FEX FPD & CHG				ORDERED BY		
			SHIP DATE 06/13/03	SALESMAN 364		PICKED BY / DATE

CATALOG	DESCRIPTION (COLOR: PUT UP:)	U/M	QUANTITY ORDERED	QUANTITY SHIPPED	QUANTITY BACK ORDERED
NOTE: ITEMS NOT APPEARING ON THIS PACKING LIST MAY HAVE BEEN BACKORDERED OR SHIPPED FROM ANOTHER EIS LOCATION DO NOT SHIP WITHOUT CERTIFICATE OF ANALYSIS					
SR99SW.031 23068	96.3/AG3.7, SOLID WIRE, .031 DIA, 1 LB	LB	2.00	2	0.00
**********	**********				**********
**********	MUST HAVE CERTIFICATE OF ANALYSIS WITH SHIPMENT!!				
**********	**********				**********
	CERTIFICATE OF COMPLIANCE				
MATERIALS INCLUDED IN THIS SHIPMENT ARE THOSE SPECIFIED ON THE PURCHASE ORDER. ALL SPECIFICATIONS AND PROPERTIES OF THE MATERIAL ARE DETERMINED BY THE MANUFACTURER.					
Authorized Signature / Title: Scott Keith / Ship Lead					
Lot/Batch Number	(MFG DATE) or ~~MFG Shelf Date~~		Shelf Life	Date of Exp	
311910	5/8/03		indefinite	N/A	
**********	**********				**********

THIS SALE IS SUBJECT TO ALL CONDITIONS AND PROVISIONS APPEARING ON THE REVERSE HEREOF

NORTHROP GRUMMAN
Component Technologies

Kester

RM-1294

Northrop Grumman Corporation
Kester
515 E. Touhy Avenue
Des Plaines, Illinois 60018

Telephone: (847) 297-1600
Fax: (847) 390-9338

CERTIFICATE OF ANALYSIS

ORDER NUMBER:: N/A
CUSTOMER PO:: N/A
LOT NUMBER: 311910

PRODUCT: Sn96.3Ag3.7 Solid Wire

TEST	UNITS	RESULT	MIN SPEC	MAX SPEC
Tin	wt%	BALANCE	Balance	Balance
Lead	wt%	0.0342		0.200
Antimony	wt%	0.0215		0.500
Copper	wt%	0.0044		0.080
Gold	wt%	0.0001		0.050
Aluminum	wt%	0.0001		0.005
Cadmium	wt%	0.0001		0.002
Zinc	wt%	0.0004		0.003
Silver	wt%	3.66	3.50	3.90
Bismuth	wt%	0.0023		0.100
Arsenic	wt%	0.0020		0.030
Iron	wt%	0.0021		0.020
Indium	wt%	0.0040		0.100
Nickel	wt%	0.0002		0.010

We certify that this product conforms to all product specification requirements.
The inspection and test data is indicated above.
This document is computer generated and does not require a signature

CMI Quality Assurance Inspection Plan

Checked By: TA
Date: 7-18-03
DC Stamp: CM DC
MAP # MP13193
Rev. 0

Proj #	18758	Description	Feedhorn Block, 10209833, Final Assembly	Part #	10209833	Rev.	X5
Customer	JPL	Total Quantity	1	Serial Numbers		MIL STD -105 LEVEL II SINGLE C=100% M= 1.5 AQL A= 4.0 AQL	

Item #	Characteristic	Seq # No.	Dwg Zone	AQL	Insp Gage Number	Actual/Range	Qty Insp	Qty Acc	Qty Rej	Cert Oper Stamp Date	Insp Stamp Date
5	Record Proj #, S/N's, QTY on QAIP	50		C							
	CMI dwg # 18204										
10	Ø.375±.005 THRU	50	E4	C		ACCEPT	1	1	0		CMI 6 11-7-03
15	.887±.005	50	E2	C		.886	↓	↓	↓		↓
20	1.3386+.000/-.008	50	B2	C		1.3345	↓	↓	↓		↓
25	1.684±.005	50	C4	C		1.6825	↓	↓	↓		↓
30	4X R.354+.008/-.000	50	D1	C		.356 - .359	↓	↓	↓		↓
35	.7419	50	E5	C		.7420	↓	↓	↓		↓
40	▱ .0002	50	B5	C		.0002	↓	↓	↓		↓
45	2X R.972+.000/-.008	50	A1	C		.9695 - .968	↓	↓	↓		↓
50	.1979	50	B6	C		.1972 - .1974	↓	↓	↓		↓
55	// .0002 X	50	E6	C		.0002	↓	↓	↓		↓
	CMI dwg # 18203										
60	~~1420~~ 1.0848	50	D3	C		SEE CHART NCR13011	97/8/15	97/11	8/4		CMI 6 DC 11-19-03
65	.9428	65	D5	C		↓	97/16	97/16	0		↓

CMI Quality Assurance Inspection Plan

Checked By:	DC Stamp	MAP #	Rev.
Date:	CM DC	MP13193	0

Proj #		Description	Feedhorn Block, 10209833, Final Assembly	Part #	10209833	Rev.	X5
Customer	JPL	Total Quantity		Serial Numbers		MIL STD -105 LEVEL II SINGLE C=100% M= 1.5 AQL A= 4.0 AQL	

Item #	Characteristic	Seq # No.	Dwg Zone	AQL	Insp Gage Number	Actual/Range	Qty Insp	Qty Acc	Qty Rej	Cert Oper Stamp Date	Insp Stamp Date
	JPL dwg # 10209833										
70	⌖ Ø0,04 X Y E	100	D2	C		.0298 MAX	1	1	0		1-9-04
75	◎ 0,015 E	100	F9	C		SEE REPORT NCR 13011	142/11	142	11		12-17-03
	CMI dwg # 18206										
80	.7369	118	E5	C		.7403 OK PER CUSTOMER DRAWING	1	1	0		1-27-04
85	.1919	118	B6	C		.19205 - .19175	1	1	1		
90	4X R.0476±.004	118	E4	C		.0467 - .0478					
95	.8071+.000/-.008	118	B2	C		.8048					
100	1.6035+.000/-.008	118	C1	C		1.60055					
	JPL dwg # 10209833										
105	inspect assembly for aluminum, stains, and debris	155		C		ACCEPT	1	1	0		4-30-04
110	4X R9 MIN	175	C9	C		9.625 - 9.103	1	1	0		
115	// 0,05 A	175	E10	C		.0196	1	1	0		
120	23,618±0,2 (4 corners)	175	E11	C		23.6699	1	1	0		
125	//,003 A	175	D10	C		~~5-7-04 .0027~~ NCR 13111 .0036	1	~~1~~	~~0~~		5-13-04
130	2X 17+0/-0,2	175	C11	C		16.964 - 16.936	1	1	0		

CMI Quality Assurance Inspection Plan

Checked By:	DC Stamp	MAP #	Rev.
Date:	DC	MP13193	0

Proj #		Description	Feedhorn Block, 10209833, Final Assembly	Part #	10209833	Rev.	X5
Customer	JPL	Total Quantity		Serial Numbers		MIL STD -105 LEVEL II SINGLE C=100% M= 1.5 AQL A= 4.0 AQL	

Item #	Characteristic	Seq # No.	Dwg Zone	AQL	Insp Gage Number	Actual/Range	Qty Insp	Qty Acc	Qty Rej	Cert Oper Stamp Date	Insp Stamp Date
135	3	175	E7	C		2.964 – 2.987	1	1	0		5-7-04
140	1,8995+0,02/-0 69 boss points, 69 land points	175	D7	C		~~1.9019~~ NCR13111 SEE ATTACHED REPORT	1	1	0		5-13-04
145	▱ 0,003	175	D7	C		.0024	1	1	0		5-7-04
150	139X Ø2,405/2,395 ◎ 0,015 E	175	G10	C		2.405 - 2.4372 NCR13111 SEE PREVIOUS REPORT (SEQ#10)	1	1	0		5-13-04
155	Ø0,176/0,166 ⌖ Ø0,04 X Y Z	175	D2	C		.1761 – .1868 NCR 13106 SEE REPORT NCR 13111	1	1	0		5-13-04
160	139X 0,2 surface finish	175	E3	C		.05	1	1	0		5-7-04
165	4X Ø2,25/2 THRU ⌖ Ø0,05 Ⓜ X Y Z	175	B12	C		2.1017 - 2.1057 .0146 .0152, .0116, .0095	1	1	0		
170	2X Ø3,2/3,12 THRU ∨ Ø3,85/3,6 X 90° M3,5 X 0,35-6H ⌖ Ø0,35 X Y Z	175	H9	C		3.1756 - 3.1895 3.6068 ACCEPT .0181, .0073	1	1	0		
175	Ø1,61/1,6 THRU ⌖Ø0,01Ⓜ A	175	C9	C		1.6042 .0001	1	1	0		
180	1,6+0,01/-0 ⌖0,05 A B C	175	E5	C		1.6016 .01181	1	1	0		
185	~~0,25~~ 1.85 PER CUSTOMER DRWG 4-30-04 ⌖0,1 A B C PER D.S.	175	D5	C		1.8709 .01181	1	1	0		
190	2X R	175	D6	C		ACCEPT	1	1	0		

CMI Quality Assurance Inspection Plan

Checked By:	DC Stamp	MAP #	Rev.
Date:	CM DC	MP13193	0

Proj #		Description	Feedhorn Block, 10209833, Final Assembly	Part #	10209833	Rev.	X5
Customer	JPL	Total Quantity		Serial Numbers		MIL STD -105 LEVEL II SINGLE C=100% M= 1.5 AQL A= 4.0 AQL	

Item #	Characteristic	Seq # No.	Dwg Zone	AQL	Insp Gage Number	Actual/Range	Qty Insp	Qty Acc	Qty Rej	Cert Oper Stamp Date	Insp Stamp Date
195	Weight parts and record results	175		C		141.3 g NCR13111	1	~~0~~ 1 DL	~~1~~ 0 DL		CM 6 DL 5-13-04
200	Inspect plating per SP1019, section 6.2	175		C		SURFACE IRREGULARITY DUE TO ETCH PROCESS SHALLOW DIMPLES NCR13111	1	~~0~~ 1 DL	~~1~~ 0 DL		CM 6 DL 5-13-04
205	Final Inspect as per SP1019	175		C		ACCEPT	1	1	0		CM 6 DL 5-13-04

1.0848

10209833 Electroform Table			
	S/N	~~0.1420~~	0.9428
#1		1.0852	.9428
#2		1.0849	.9432
#3		1.0850	.9432
#4		1.0850	.9430
#5		1.0850	.9432
#6		1.0851	.9431
#7		1.0849	.9431
#8		1.0852	.9430
#9		1.0852	.9432
#10		1.0852	.9432
#11		1.0850	.9432
#12		1.0851	.9431
#13		1.0849	.9429
#14		1.0853	.9430
#15		1.0852	.9431
#16		1.0852	.9431
#17		1.0850	.9430
#18		1.0850	.9431
#19		1.0851	.9431
#20		1.0850	.9432
#21.		1.0850	.9432
#22			
#23	UPA	1.0832 ←	.9426 ←
#24		1.0852	.9431
#25		1.0851	.9434
#26		1.0850	.9429
#27			
#28		1.0846	.9413
#29		1.0849	.9429
#30		1.0850	.9434
#31			
#32			
#33		1.0847	.9433
#34		1.0847	.9429
#35		1.0852	.9430
#36		1.0850	.9430
#37		1.0849	.9425
#38		1.0850	.9427
#39	UPA	1.0842 ←	.9435 P8681
#40		1.0850	.9430
#41		1.0851	.9434
#42		1.0852	.9436
#43		1.0850	.9427
#44		1.0852	.9434
#45		1.0850	.9433
#46		1.0849	.9431
#47		1.0851	.9434
#48		1.0850	.9431
#49		1.0850	.9434
#50		1.0851	.9434
#51	UPA	1.0844 ←	P8681 —
#52		1.0850	.9431
#53		1.0849	.9430

1.0848

10209833 Electroform Table			
	S/N	~~0.1420~~	0.9428
#54		1.0850	.9430
#55		1.0850	.9430
#56		1.0852	.9429
#57		1.0851	.9431
#58		1.0850	.9429
#59		1.0850	.9429
#60		1.0847	.9427
#61		1.0851	.9431
#62		1.0852	.9431
#63		1.0852	.9430
#64			
#65		1.0850	.9432
#66		1.0850	.9431
#67		1.0852	.9427
#68		1.0852	.9430
#69		1.0852	.9432
#70		1.0852	.9428
#71		1.0850	.9428
#72		1.0849	.9429
#73		1.0850	.9428
#74		1.0852	.9431
#75		1.0851	.9429
#76		1.0848	.9430
#77		1.0848	.9431
#78		1.0852	.9433
#79		1.0850	.9430
#80		1.0850	.9427
#81		1.0850	.9427
#82		1.0850	.9427
#83		1.0847	.9431
#84		1.0849	.9430
#85	UPA	1.0836 —	P8681 —
#86		1.0852	.9428
#87		1.0850	.9427
#88		1.0851	.9430
#89		1.0851	.9430
#90		1.0848	.9428
#91		1.0847	.9431
#92		1.0851	.9431
#93		1.0850	.9427
#94	UPA	1.0842 —	P8681 —
#95	UPA	1.0840 —	P8681 —
#96		1.0852	.9431
#97		1.0852	.9430
#98		1.0851	.9433
#99		1.0851	.9423
#100		1.0852	.9429
#101		1.0850	.9427
#102		1.0852	.9432
#103		1.0850	.9426
#104		1.0848	.9429
#105		1.0849	.9430
#106		1.0852	.9428

146

1.0848

10209833 Electroform Table			
	S/N	~~0.1420~~	0.9428
#107		1.0851	.9432
#108		1.0852	.9430
#109		1.0847	.9422
#110		1.0850	.9428
#111		1.0848	.9428
#112		1.0850	.9431
#113		1.0849	.9429
#114		1.0850	.9430
#115		1.0848	.9430
#116		1.0849	.9430
#117		1.0848	.9423
#118		1.0848	.9425
#119		1.0847	.9428
#120		1.0851	.9427
#121		1.0850	.9430
#122		1.0852	.9432
#123		1.0852	.9431
#124	UPA	1.0843 —	P8681 ←
#125		1.0848	.9423
#126		1.0848	.9431
#127		1.0852	.9429
#128		1.0848	.9423
#129		1.0851	.9429
#130		1.0847	.9422
#131		1.0850	.9429
#132		1.0850	.9429
#133		1.0850	.9434
#134		1.0847	.9428
#135		1.0851	.9429
#136		1.0851	.9433
#137			
#138		1.0850	.9429
#139		1.0850	.9429
#140		1.0851	.9433
#141		1.0849	.9430
#142		1.0848	.9428
#143		1.0850	.9430
#144	UPA	1.0845 —	P8681 ←
#145		1.0847	.9433
#146		1.0847	.9427
#147		1.0849	.9428
#148		1.0850	.9431
#149		1.0847	.9431
#150		1.0847	.9431
#151			
#152		1.0847	.9431
#153		1.0851	.9432
#154		1.0847	.9429
#155		1.0849	.9431
#156		1.0847	.9431
#157		1.0848	.9432
#158		1.0847	.9431
#159		1.0851	.9431

1.0848

10209833 Electroform Table				
	S/N	~~0.1420~~	0.9428	
#160		1.0848	.9430	
#161		1.0852	.9428	
#162		1.0852	.9431	
#163		1.0851	.9431	
#164		1.0852	.9433	
#165		1.0852	.9434	
#166	UPA	1.0841 —	.9434	P8681
#167		1.0851	.9432	
#168		1.0848	.9432	
#169	UPA	1.0844 —	.9434	
#170		1.0851	.9433	
#171	UPA	1.0843 —	.9429 —	P8681
#172				
#173	UPA	1.08[illegible]48 —	.9432	P8681
#174		1.0850	.9429	
#175		1.0851	.9432	
#176		1.0850	.9432	
#177				
#178		1.0848	.9430	
#179				
#180				
#181				
#182				
#183				
#184				
#185				
#186				
#187				
#188				
#189				
#190				
#191				
#192				
#193				
#194				
#195				
#196				
#197				
#198				
#199				
#200				
#201				
#202				
#203				
#204				
#205				
#206				
#207				
#208				
#209				
#210				
#211				
#212				

SEQ. 100

10209833

28

S/N	⊙ .015 MAX
1	.0119
2	.0104
3	.0091
4	.0081
5	.0136
6	.0077
7	.0150
8	.0101
9	.0111
10	.0146
11	.0093
12	.0105
13	.0060
14	—
15	.0100
16	.0136
17	.0118
18	.0131
19	.0104
20	.0017
21	.0064
22	—
23	—
24	.0039
25	.0071
26	.0023
27	.0169 — SCRAP
28	.0073
29	.0114
30	.0173 — SCRAP
31	—
32	—
33	.0111
34	.0145
35	.0118

29

S/N	⊙ .015 MAX
36	.0139
37	.0079
38	.0089
39	—
40	.0025
41	.0100
42	.0068
43	.0129
44	.0144
45	.0088
46	.0047
47	.0103
48	.0073
49	.0150
50	.0142
51	—
52	.0144
53	—
54	.0148
55	.0263 —
56	.0137
57	.0094
58	.0066
59	.0039
60	—
61	.0132
62	.0107
63	.0092
64	—
65	.0092
66	.0042
67	.0100
68	.0048
69	.0023
70	.0126

32

S/N	⊙ .015 MAX
71	.0018
72	.0077
73	.0046
74	.0061
75	.0091
76	.0063
77	.0038
78	.0049
79	.0148
80	.0077
81	.0038
82	.0063
83	.0059
84	.0037
85	—
86	.0046
87	.0025
88	.0111
89	.0003
90	.0088
91	.0050
92	.0127
93	.0057
94	—
95	—
96	.0023
97	.0076
98	.0045
99	.0051
100	.0107
101	.0083
102	.0035
103	.0050
104	.0068
105	.0094

52

10209833

29

S/N	⓪ .015 MAX
106	.0097
107	.0063
108	.0095
109	.0070
110	.0075
111	.0111
112	—
113	.0056
114	.0035
115	.0063
116	.0109
117	—
118	.0046
119	.0016
120	.0057
121	.0048
122	.0037
123	.0051
124	—
125	.0062
126	.0018
127	.0091
128	.0065
129	—
130	.0100
131	.0002
132	.0102
133	—
134	.0018
135	.0058
136	.0138
137	—
138	.0064
139	.0045
140	.0114

21

S/N	
141	.0141
142	.0043
143	.0112
144	—
145	.0097
146	.0082
147	.0042
148	.0041
149	—
150	.0057
151	—
152	.0048
153	.0090
154	.0071
155	.0023
156	.0162 — SCRAP
157	.0056
158	.0082
159	.0083
160	.0139
161	.0167 — SCRAP
162	.021 — SCRAP
163	.022 — SCRAP
164	.020 — SCRAP
165	.0112
166	—
167	.0038
168	.0066
169	—
170	.0094
171	—
172	—
173	—
174	.0065
175	.0023

2

S/N	
176	.0075
177	—
178	.0082
179	
180	
181	
182	

SCRAPED PARTS ON NCR 13011

TIME: 13:43

DATE: 07.May.2

CARL ZEISS — IMT, 3D-MEASURING PROGRAM

No.	TASK	REM	SY	ACTUAL	NOMINAL	UPPERTOL	LOWERTOL	DEVIATION	OVER
1	PLANE		X	0.0000					
			Y	0.0000					
			Z	0.0000					
			AR	-129.1021					
			AI	0.0000					
			Di	0.0000					
			Fl	0.0016					
2	PARALLEL		Pa	0.0036		+0.0030		+0.0006	+++++
3	POINT		Z	1.8998	1.8995	+0.0200	+0.0000		-97%
4	POINT		Z	1.9001	1.8995	+0.0200	+0.0000		-94%
5	POINT		Z	1.9005	1.8995	+0.0200	+0.0000		-90%
6	POINT		Z	1.9003					
7	POINT		Z	1.9007					
8	POINT		Z	1.9004					
9	POINT		Z	1.9001					
10	POINT		Z	1.8999					
11	POINT		Z	1.8996					
12	POINT		Z	1.8996					
13	POINT		Z	1.8993					
14	POINT		Z	1.8991					
15	POINT		Z	1.8982	1.8995	+0.0200	+0.0000	-0.0013	-----
16	POINT		Z	1.8990	1.8995	+0.0200	+0.0000	-0.0005	-----
17	POINT		Z	1.8993	1.8995	+0.0200	+0.0000	-0.0002	-----
18	POINT		Z	1.8996	1.8995	+0.0200	+0.0000		-99%
19	POINT		Z	1.8995	1.8995	+0.0200	+0.0000	+0.0000	-100%
20	POINT		Z	1.8997	1.8995	+0.0200	+0.0000		-98%
21	POINT		Z	1.8988	1.8995	+0.0200	+0.0000	-0.0007	-----
22	POINT		Z	1.8984	1.8995	+0.0200	+0.0000	-0.0011	-----
23	POINT		Z	1.8985	1.8995	+0.0200	+0.0000	-0.0010	-----
24	POINT		Z	1.8977	1.8995	+0.0200	+0.0000	-0.0018	-----

CARL ZEISS — IMT, 3D—MEASURING PROGRAM

No.	TASK	REM	SY	ACTUAL	NOMINAL	UPPERTOL	LOWERTOL	DEVIATION	OVER
25	POINT		Z	1.8977	1.8995	+0.0200	+0.0000	-0.0018	-----
26	POINT		Z	1.8972	1.8995	+0.0200	+0.0000	-0.0023	-----
27	POINT		Z	1.8968	1.8995	+0.0200	+0.0000	-0.0027	-----
28	POINT		Z	1.8972	1.8995	+0.0200	+0.0000	-0.0023	-----
29	POINT		Z	1.8975	1.8995	+0.0200	+0.0000	-0.0020	-----
30	POINT		Z	1.8979	1.8995	+0.0200	+0.0000	-0.0016	-----
31	POINT		Z	1.8981	1.8995	+0.0200	+0.0000	-0.0014	-----
32	POINT		Z	1.8975	1.8995	+0.0200	+0.0000	-0.0020	-----
33	POINT		Z	1.8968	1.8995	+0.0200	+0.0000	-0.0027	-----

32 PERPEND.	A	[illegible]	[illegible]	[illegible]	[illegible]	[illegible]
	Pe	0.0001		+0.0100		
	RL	2.1716				
	Cy	0.0025				
33 CIRCLE	X	0.0003				
	Y	0.0005				
	D	1.6042	1.6000	+0.0100	+0.0000	-16%
	Ro	0.0009				
34 DISTANCE	Di	1.8709	1.8500	+0.1000	-0.1000	21%
35 POINT	X	-46.1302	-46.1250	+0.0500	-0.0500	-10%
	Y	0.0014	0.0000	+0.0250	-0.0250	6%
36 DISTANCE	Di	23.6699	23.6180	+0.2000	-0.2000	26%
37 PARALLEL	Pa	0.0196		+0.0500		39%

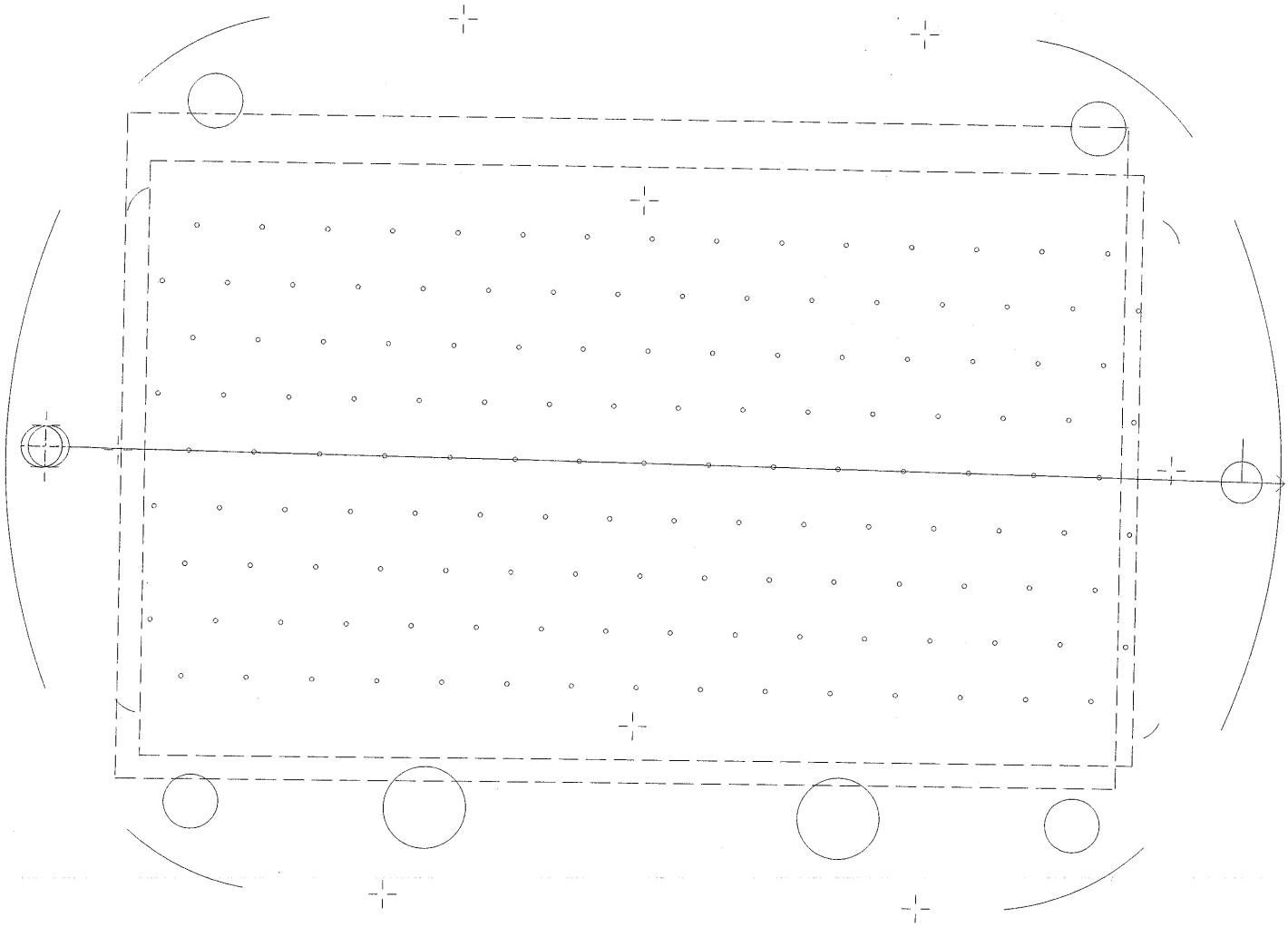

SEQ 175

Program: 10209833 jpl feedhorn 139 with datum hole pattern.iDate: Fri May 07 2004 Time: 14:48:51
Units: mm, dec deg

Feature	Actual	Nominal	Plus (+)	Minus (-)	Dev/Nom	Out/Tol
Circle 15	[System 14]					
Center X	-5.5132	-5.5167			0.0035	
Center Y	0.0086	0.0000			0.0086	
Diameter	0.1740	0.1660	0.0100	0.0000	0.0080	
Circularity	0.0024					
TP RFS	0.0186		0.0400			
Circle 16	[System 14]					
Center X	-8.0211	-8.0240			0.0029	
Center Y	0.0056	0.0000			0.0056	
Diameter	0.1745	0.1660	0.0100	0.0000	0.0085	
Circularity	0.0023					
TP RFS	0.0127		0.0400			
Circle 17	[System 14]					
Center X	-10.5279	-10.5312			0.0033	
Center Y	0.0079	0.0000			0.0079	
Diameter	0.1745	0.1660	0.0100	0.0000	0.0085	
Circularity	0.0049					
TP RFS	0.0172		0.0400			
Circle 18	[System 14]					
Center X	-13.0313	-13.0385			0.0072	
Center Y	0.0055	0.0000			0.0055	
Diameter	0.1729	0.1660	0.0100	0.0000	0.0069	
Circularity	0.0019					
TP RFS	0.0180		0.0400			
Circle 19	[System 14]					
Center X	-15.5414	-15.5457			0.0043	
Center Y	0.0084	0.0000			0.0084	
Diameter	0.1772	0.1660	0.0100	0.0000	0.0112	0.0012
Circularity	0.0036					
TP RFS	0.0189		0.0400			
Circle 20	[System 14]					
Center X	-18.0419	-18.0530			0.0111	
Center Y	0.0138	0.0000			0.0138	
Diameter	0.1766	0.1660	0.0100	0.0000	0.0106	0.0006
Circularity	0.0033					
TP RFS	0.0354		0.0400			
Circle 21	[System 14]					
Center X	-20.5540	-20.5602			0.0062	
Center Y	0.0129	0.0000			0.0129	
Diameter	0.1767	0.1660	0.0100	0.0000	0.0107	0.0007
Circularity	0.0044					
TP RFS	0.0287		0.0400			
Circle 22	[System 14]					
Center X	-23.0630	-23.0675			0.0045	
Center Y	0.0132	0.0000			0.0132	
Diameter	0.1762	0.1660	0.0100	0.0000	0.0102	0.0002
Circularity	0.0077					
TP RFS	0.0278		0.0400			
Circle 23	[System 14]					
Center X	-25.5628	-25.5747			0.0119	
Center Y	0.0131	0.0000			0.0131	
Diameter	0.1724	0.1660	0.0100	0.0000	0.0064	
Circularity	0.0020					
TP RFS	0.0355		0.0400			

Program: 10209833 jpl feedhorn 139 with datum hole pattern.iDate: Fri May 07 2004 Time: 14:48:51
Units: mm, dec deg

Feature	Actual	Nominal	Plus (+)	Minus (-)	Dev/Nom	Out/Tol
Circle 24	[System 14]					
Center X	-28.0636	-28.0820			0.0184	
Center Y	0.0131	0.0000			0.0131	
Diameter	0.1746	0.1660	0.0100	0.0000	0.0086	
Circularity	0.0017					
TP RFS	0.0451		0.0400			0.0051
Circle 25	[System 14]					
Center X	-30.5764	-30.5892			0.0128	
Center Y	0.0160	0.0000			0.0160	
Diameter	0.1712	0.1660	0.0100	0.0000	0.0052	
Circularity	0.0047					
TP RFS	0.0409		0.0400			0.0009
Circle 26	[System 14]					
Center X	-33.0863	-33.0965			0.0102	
Center Y	0.0100	0.0000			0.0100	
Diameter	0.1718	0.1660	0.0100	0.0000	0.0058	
Circularity	0.0018					
TP RFS	0.0286		0.0400			
Circle 27	[System 14]					
Center X	-35.5926	-35.6037			0.0111	
Center Y	0.0096	0.0000			0.0096	
Diameter	0.1721	0.1660	0.0100	0.0000	0.0061	
Circularity	0.0014					
TP RFS	0.0295		0.0400			
Circle 28	[System 14]					
Center X	-38.1013	-38.1110			0.0097	
Center Y	0.0201	0.0000			0.0201	
Diameter	0.1742	0.1660	0.0100	0.0000	0.0082	
Circularity	0.0053					
TP RFS	0.0446		0.0400			0.0046
Circle 29	[System 14]					
Center X	-40.6043	-40.6182			0.0139	
Center Y	0.0170	0.0000			0.0170	
Diameter	0.1691	0.1660	0.0100	0.0000	0.0031	
Circularity	0.0019					
TP RFS	0.0438		0.0400			0.0038
Circle 31	[System 14]					
Center X	-5.5119	-5.5167			0.0048	
Center Y	4.3544	4.3429			0.0115	
Diameter	0.1689	0.1660	0.0100	0.0000	0.0029	
Circularity	0.0021					
TP RFS	0.0249		0.0400			
Circle 32	[System 14]					
Center X	-8.0145	-8.0240			0.0095	
Center Y	4.3432	4.3429			0.0003	
Diameter	0.1698	0.1660	0.0100	0.0000	0.0038	
Circularity	0.0027					
TP RFS	0.0190		0.0400			
Circle 33	[System 14]					
Center X	-10.5207	-10.5312			0.0105	
Center Y	4.3407	4.3429			-0.0022	
Diameter	0.1668	0.1660	0.0100	0.0000	0.0008	
Circularity	0.0022					
TP RFS	0.0215		0.0400			

Program: 10209833 jpl feedhorn 139 with datum hole pattern.iDate: Fri May 07 2004 Time: 14:48:51
Units: mm, dec deg

Feature	Actual	Nominal	Plus (+)	Minus (-)	Dev/Nom	Out/Tol
Circle 34	[System 14]					
Center X	-13.0316	-13.0385			0.0069	
Center Y	4.3465	4.3429			0.0036	
Diameter	0.1680	0.1660	0.0100	0.0000	0.0020	
Circularity	0.0016					
TP RFS	0.0156		0.0400			
Circle 35	[System 14]					
Center X	-15.5383	-15.5457			0.0074	
Center Y	4.3409	4.3429			-0.0020	
Diameter	0.1675	0.1660	0.0100	0.0000	0.0015	
Circularity	0.0023					
TP RFS	0.0153		0.0400			
Circle 36	[System 14]					
Center X	-18.0407	-18.0530			0.0123	
Center Y	4.3417	4.3429			-0.0012	
Diameter	0.1673	0.1660	0.0100	0.0000	0.0013	
Circularity	0.0026					
TP RFS	0.0248		0.0400			
Circle 37	[System 14]					
Center X	-20.5493	-20.5602			0.0109	
Center Y	4.3473	4.3429			0.0044	
Diameter	0.1695	0.1660	0.0100	0.0000	0.0035	
Circularity	0.0014					
TP RFS	0.0235		0.0400			
Circle 38	[System 14]					
Center X	-23.0575	-23.0675			0.0100	
Center Y	4.3502	4.3429			0.0073	
Diameter	0.1711	0.1660	0.0100	0.0000	0.0051	
Circularity	0.0022					
TP RFS	0.0248		0.0400			
Circle 39	[System 14]					
Center X	-25.5666	-25.5747			0.0081	
Center Y	4.3486	4.3429			0.0057	
Diameter	0.1707	0.1660	0.0100	0.0000	0.0047	
Circularity	0.0027					
TP RFS	0.0197		0.0400			
Circle 40	[System 14]					
Center X	-28.0715	-28.0820			0.0105	
Center Y	4.3466	4.3429			0.0037	
Diameter	0.1699	0.1660	0.0100	0.0000	0.0039	
Circularity	0.0019					
TP RFS	0.0222		0.0400			
Circle 41	[System 14]					
Center X	-30.5766	-30.5892			0.0126	
Center Y	4.3453	4.3429			0.0024	
Diameter	0.1672	0.1660	0.0100	0.0000	0.0012	
Circularity	0.0044					
TP RFS	0.0256		0.0400			
Circle 42	[System 14]					
Center X	-33.0873	-33.0965			0.0092	
Center Y	4.3479	4.3429			0.0050	
Diameter	0.1678	0.1660	0.0100	0.0000	0.0018	
Circularity	0.0014					
TP RFS	0.0210		0.0400			

Program: 10209833 jpl feedhorn 139 with datum hole pattern.iDate: Fri May 07 2004 Time: 14:48:51
Units: mm, dec deg

Feature	Actual	Nominal	Plus (+)	Minus (-)	Dev/Nom	Out/Tol
Circle 43	[System 14]					
Center X	-35.5968	-35.6037			0.0069	
Center Y	4.3534	4.3429			0.0105	
Diameter	0.1682	0.1660	0.0100	0.0000	0.0022	
Circularity	0.0016					
TP RFS	0.0251		0.0400			
Circle 44	[System 14]					
Center X	-38.1001	-38.1110			0.0109	
Center Y	4.3569	4.3429			0.0140	
Diameter	0.1686	0.1660	0.0100	0.0000	0.0026	
Circularity	0.0021					
TP RFS	0.0354		0.0400			
Circle 45	[System 14]					
Center X	-40.6039	-40.6182			0.0143	
Center Y	4.3591	4.3429			0.0162	
Diameter	0.1744	0.1660	0.0100	0.0000	0.0084	
Circularity	0.0036					
TP RFS	0.0433		0.0400			0.0033
Circle 46	[System 14]					
Center X	-5.5086	-5.5167			0.0081	
Center Y	8.6875	8.6858			0.0017	
Diameter	0.1732	0.1660	0.0100	0.0000	0.0072	
Circularity	0.0028					
TP RFS	0.0166		0.0400			
Circle 47	[System 14]					
Center X	-8.0224	-8.0240			0.0016	
Center Y	8.6814	8.6858			-0.0044	
Diameter	0.1722	0.1660	0.0100	0.0000	0.0062	
Circularity	0.0017					
TP RFS	0.0093		0.0400			
Circle 48	[System 14]					
Center X	-10.5286	-10.5312			0.0026	
Center Y	8.6798	8.6858			-0.0060	
Diameter	0.1706	0.1660	0.0100	0.0000	0.0046	
Circularity	0.0021					
TP RFS	0.0130		0.0400			
Circle 49	[System 14]					
Center X	-13.0257	-13.0385			0.0128	
Center Y	8.6802	8.6858			-0.0056	
Diameter	0.1766	0.1660	0.0100	0.0000	0.0106	0.0006
Circularity	0.0042					
TP RFS	0.0280		0.0400			
Circle 50	[System 14]					
Center X	-15.5388	-15.5457			0.0069	
Center Y	8.6805	8.6858			-0.0053	
Diameter	0.1730	0.1660	0.0100	0.0000	0.0070	
Circularity	0.0024					
TP RFS	0.0173		0.0400			
Circle 51	[System 14]					
Center X	-18.0390	-18.0530			0.0140	
Center Y	8.6830	8.6858			-0.0028	
Diameter	0.1713	0.1660	0.0100	0.0000	0.0053	
Circularity	0.0017					
TP RFS	0.0285		0.0400			

Program: 10209833 jpl feedhorn 139 with datum hole pattern.iDate: Fri May 07 2004 Time: 14:48:51
Units: mm, dec deg

Feature	Actual	Nominal	Plus (+)	Minus (-)	Dev/Nom	Out/Tol
Circle 52	[System 14]					
Center X	-20.5494	-20.5602			0.0108	
Center Y	8.6833	8.6858			-0.0025	
Diameter	0.1710	0.1660	0.0100	0.0000	0.0050	
Circularity	0.0020					
TP RFS	0.0223		0.0400			
Circle 53	[System 14]					
Center X	-23.0523	-23.0675			0.0152	
Center Y	8.6841	8.6858			-0.0017	
Diameter	0.1723	0.1660	0.0100	0.0000	0.0063	
Circularity	0.0054					
TP RFS	0.0307		0.0400			
Circle 54	[System 14]					
Center X	-25.5611	-25.5747			0.0136	
Center Y	8.6856	8.6858			-0.0002	
Diameter	0.1726	0.1660	0.0100	0.0000	0.0066	
Circularity	0.0021					
TP RFS	0.0273		0.0400			
Circle 55	[System 14]					
Center X	-28.0725	-28.0820			0.0095	
Center Y	8.6831	8.6858			-0.0027	
Diameter	0.1734	0.1660	0.0100	0.0000	0.0074	
Circularity	0.0054					
TP RFS	0.0197		0.0400			
Circle 56	[System 14]					
Center X	-30.5744	-30.5892			0.0148	
Center Y	8.6877	8.6858			0.0019	
Diameter	0.1771	0.1660	0.0100	0.0000	0.0111	0.0011
Circularity	0.0103					
TP RFS	0.0299		0.0400			
Circle 57	[System 14]					
Center X	-33.0800	-33.0965			0.0165	
Center Y	8.6920	8.6858			0.0062	
Diameter	0.1780	0.1660	0.0100	0.0000	0.0120	0.0020
Circularity	0.0052					
TP RFS	0.0353		0.0400			
Circle 58	[System 14]					
Center X	-35.5846	-35.6037			0.0191	
Center Y	8.6902	8.6858			0.0044	
Diameter	0.1766	0.1660	0.0100	0.0000	0.0106	0.0006
Circularity	0.0029					
TP RFS	0.0392		0.0400			
Circle 59	[System 14]					
Center X	-38.0967	-38.1110			0.0143	
Center Y	8.6907	8.6858			0.0049	
Diameter	0.1791	0.1660	0.0100	0.0000	0.0131	0.0031
Circularity	0.0048					
TP RFS	0.0302		0.0400			
Circle 60	[System 14]					
Center X	-40.6027	-40.6182			0.0155	
Center Y	8.6937	8.6858			0.0079	
Diameter	0.1775	0.1660	0.0100	0.0000	0.0115	0.0015
Circularity	0.0033					
TP RFS	0.0347		0.0400			

Program: 10209833 jpl feedhorn 139 with datum hole pattern.iDate: Fri May 07 2004 Time: 14:48:51
Units: mm, dec deg

Feature	Actual	Nominal	Plus (+)	Minus (-)	Dev/Nom	Out/Tol
Circle 61	[System 14]					
Center X	-5.5147	-5.5167			0.0020	
Center Y	-4.3361	-4.3429			0.0068	
Diameter	0.1785	0.1660	0.0100	0.0000	0.0125	0.0025
Circularity	0.0018					
TP RFS	0.0141		0.0400			
Circle 62	[System 14]					
Center X	-8.0250	-8.0240			-0.0010	
Center Y	-4.3295	-4.3429			0.0134	
Diameter	0.1792	0.1660	0.0100	0.0000	0.0132	0.0032
Circularity	0.0060					
TP RFS	0.0268		0.0400			
Circle 63	[System 14]					
Center X	-10.5316	-10.5312			-0.0004	
Center Y	-4.3324	-4.3429			0.0105	
Diameter	0.1755	0.1660	0.0100	0.0000	0.0095	
Circularity	0.0048					
TP RFS	0.0210		0.0400			
Circle 64	[System 14]					
Center X	-13.0337	-13.0385			0.0048	
Center Y	-4.3299	-4.3429			0.0130	
Diameter	0.1761	0.1660	0.0100	0.0000	0.0101	0.0001
Circularity	0.0056					
TP RFS	0.0277		0.0400			
Circle 65	[System 14]					
Center X	-15.5457	-15.5457			-0.0000	
Center Y	-4.3286	-4.3429			0.0143	9
Diameter	0.1802	0.1660	0.0100	0.0000	0.0142	0.0042
Circularity	0.0061					
TP RFS	0.0286		0.0400			
Circle 66	[System 14]					
Center X	-18.0473	-18.0530			0.0057	6
Center Y	-4.3258	-4.3429			0.0171	
Diameter	0.1868	0.1660	0.0100	0.0000	0.0208	0.0108 X
Circularity	0.0033					
TP RFS	0.0361		0.0400			
Circle 67	[System 14]					
Center X	-20.5542	-20.5602			0.0060	
Center Y	-4.3284	-4.3429			0.0145	
Diameter	0.1754	0.1660	0.0100	0.0000	0.0094	
Circularity	0.0030					
TP RFS	0.0314		0.0400			
Circle 68	[System 14]					
Center X	-23.0662	-23.0675			0.0013	
Center Y	-4.3213	-4.3429			0.0216	
Diameter	0.1735	0.1660	0.0100	0.0000	0.0075	
Circularity	0.0021					
TP RFS	0.0432		0.0400			0.0032
Circle 69	[System 14]					
Center X	-25.5614	-25.5747			0.0133	
Center Y	-4.3186	-4.3429			0.0243	
Diameter	0.1720	0.1660	0.0100	0.0000	0.0060	
Circularity	0.0033					
TP RFS	0.0554		0.0400			0.0154

Program: 10209833 jpl feedhorn 139 with datum hole pattern.iDate: Fri May 07 2004 Time: 14:48:51
Units: mm, dec deg

Feature	Actual	Nominal	Plus (+)	Minus (-)	Dev/Nom	Out/Tol
Circle 70	[System 14]					
Center X	-28.0803	-28.0820			0.0017	
Center Y	-4.3197	-4.3429			0.0232	
Diameter	0.1688	0.1660	0.0100	0.0000	0.0028	
Circularity	0.0028					
TP RFS	0.0466		0.0400			0.0066
Circle 71	[System 14]					
Center X	-30.5783	-30.5892			0.0109	
Center Y	-4.3234	-4.3429			0.0195	
Diameter	0.1755	0.1660	0.0100	0.0000	0.0095	
Circularity	0.0024					
TP RFS	0.0447		0.0400			0.0047
Circle 72	[System 14]					
Center X	-33.0903	-33.0965			0.0062	
Center Y	-4.3187	-4.3429			0.0242	
Diameter	0.1752	0.1660	0.0100	0.0000	0.0092	
Circularity	0.0022					
TP RFS	0.0500		0.0400			0.0100
Circle 73	[System 14]					
Center X	-35.5905	-35.6037			0.0132	
Center Y	-4.3200	-4.3429			0.0229	
Diameter	0.1750	0.1660	0.0100	0.0000	0.0090	
Circularity	0.0025					
TP RFS	0.0528		0.0400			0.0128
Circle 74	[System 14]					
Center X	-38.0956	-38.1110			0.0154	
Center Y	-4.3240	-4.3429			0.0189	
Diameter	0.1774	0.1660	0.0100	0.0000	0.0114	0.0014
Circularity	0.0027					
TP RFS	0.0488		0.0400			0.0088
Circle 75	[System 14]					
Center X	-40.6063	-40.6182			0.0119	
Center Y	-4.3253	-4.3429			0.0176	
Diameter	0.1824	0.1660	0.0100	0.0000	0.0164	0.0064
Circularity	0.0032					
TP RFS	0.0425		0.0400			0.0025
Circle 76	[System 14]					
Center X	-5.5182	-5.5167			-0.0015	
Center Y	-8.6679	-8.6858			0.0179	
Diameter	0.1745	0.1660	0.0100	0.0000	0.0085	
Circularity	0.0045					
TP RFS	0.0360		0.0400			
Circle 77	[System 14]					
Center X	-8.0196	-8.0240			0.0044	
Center Y	-8.6698	-8.6858			0.0160	
Diameter	0.1743	0.1660	0.0100	0.0000	0.0083	
Circularity	0.0022					
TP RFS	0.0331		0.0400			
Circle 78	[System 14]					
Center X	-10.5337	-10.5312			-0.0025	
Center Y	-8.6662	-8.6858			0.0196	
Diameter	0.1722	0.1660	0.0100	0.0000	0.0062	
Circularity	0.0018					
TP RFS	0.0395		0.0400			

Program: 10209833 jpl feedhorn 139 with datum hole pattern.iDate: Fri May 07 2004 Time: 14:48:51
Units: mm, dec deg

Feature	Actual	Nominal	Plus (+)	Minus (-)	Dev/Nom	Out/Tol
Circle 79	[System 14]					
Center X	-13.0368	-13.0385			0.0017	
Center Y	-8.6604	-8.6858			0.0254	
Diameter	0.1720	0.1660	0.0100	0.0000	0.0060	
Circularity	0.0026					
TP RFS	0.0509		0.0400			0.0109
Circle 80	[System 14]					
Center X	-15.5446	-15.5457			0.0011	
Center Y	-8.6624	-8.6858			0.0234	
Diameter	0.1726	0.1660	0.0100	0.0000	0.0066	
Circularity	0.0022					
TP RFS	0.0468		0.0400			0.0068
Circle 81	[System 14]					
Center X	-18.0501	-18.0530			0.0029	
Center Y	-8.6585	-8.6858			0.0273	
Diameter	0.1722	0.1660	0.0100	0.0000	0.0062	
Circularity	0.0030					
TP RFS	0.0549		0.0400			0.0149
Circle 82	[System 14]					
Center X	-20.5560	-20.5602			0.0042	
Center Y	-8.6543	-8.6858			0.0315	
Diameter	0.1717	0.1660	0.0100	0.0000	0.0057	
Circularity	0.0030					
TP RFS	0.0636		0.0400			0.0236
Circle 83	[System 14]					
Center X	-23.0636	-23.0675			0.0039	
Center Y	-8.6515	-8.6858			0.0343	
Diameter	0.1701	0.1660	0.0100	0.0000	0.0041	
Circularity	0.0029					
TP RFS	0.0690		0.0400			0.0290
Circle 84	[System 14]					
Center X	-25.5706	-25.5747			0.0041	
Center Y	-8.6546	-8.6858			0.0312	
Diameter	0.1695	0.1660	0.0100	0.0000	0.0035	
Circularity	0.0017					
TP RFS	0.0630		0.0400			0.0230
Circle 85	[System 14]					
Center X	-28.0761	-28.0820			0.0059	
Center Y	-8.6491	-8.6858			0.0367	
Diameter	0.1751	0.1660	0.0100	0.0000	0.0091	
Circularity	0.0043					
TP RFS	0.0743		0.0400			0.0343
Circle 86	[System 14]					
Center X	-30.5863	-30.5892			0.0029	
Center Y	-8.6501	-8.6858			0.0357	
Diameter	0.1727	0.1660	0.0100	0.0000	0.0067	
Circularity	0.0022					
TP RFS	0.0716		0.0400			0.0316
Circle 87	[System 14]					
Center X	-33.0869	-33.0965			0.0096	
Center Y	-8.6573	-8.6858			0.0285	
Diameter	0.1746	0.1660	0.0100	0.0000	0.0086	
Circularity	0.0051					
TP RFS	0.0602		0.0400			0.0202

Program: 10209833 jpl feedhorn 139 with datum hole pattern.iDate: Fri May 07 2004 Time: 14:48:51
Units: mm, dec deg

Feature	Actual	Nominal	Plus (+)	Minus (-)	Dev/Nom	Out/Tol
Circle 88	[System 14]					
Center X	-35.5931	-35.6037			0.0106	
Center Y	-8.6583	-8.6858			0.0275	
Diameter	0.1721	0.1660	0.0100	0.0000	0.0061	
Circularity	0.0029					
TP RFS	0.0590		0.0400			0.0190
Circle 89	[System 14]					
Center X	-38.1019	-38.1110			0.0091	
Center Y	-8.6564	-8.6858			0.0294	
Diameter	0.1752	0.1660	0.0100	0.0000	0.0092	
Circularity	0.0027					
TP RFS	0.0615		0.0400			0.0215
Circle 90	[System 14]					
Center X	-40.6051	-40.6182			0.0131	
Center Y	-8.6611	-8.6858			0.0247	
Diameter	0.1750	0.1660	0.0100	0.0000	0.0090	
Circularity	0.0021					
TP RFS	0.0560		0.0400			0.0160
Circle 131	[System 14]					
Center X	-4.2663	-4.2617			-0.0046	
Center Y	-2.1610	-2.1714			0.0104	
Diameter	0.1757	0.1660	0.0100	0.0000	0.0097	
Circularity	0.0017					
TP RFS	0.0227		0.0400			
Circle 147	[System 14]					
Center X	-6.7680	-6.7690			0.0010	
Center Y	-2.1612	-2.1714			0.0102	
Diameter	0.1730	0.1660	0.0100	0.0000	0.0070	
Circularity	0.0025					
TP RFS	0.0205		0.0400			
Circle 148	[System 14]					
Center X	-9.2713	-9.2762			0.0049	
Center Y	-2.1585	-2.1714			0.0129	
Diameter	0.1757	0.1660	0.0100	0.0000	0.0097	
Circularity	0.0015					
TP RFS	0.0275		0.0400			
Circle 149	[System 14]					
Center X	-11.7812	-11.7835			0.0023	8
Center Y	-2.1550	-2.1714			0.0164	
Diameter	0.1814	0.1660	0.0100	0.0000	0.0154	0.0054 X
Circularity	0.0024					
TP RFS	0.0331		0.0400			
Circle 150	[System 14]					
Center X	-14.2853	-14.2913			0.0060	
Center Y	-2.1617	-2.1714			0.0097	
Diameter	0.1796	0.1660	0.0100	0.0000	0.0136	0.0036
Circularity	0.0031					
TP RFS	0.0227		0.0400			
Circle 151	[System 14]					
Center X	-16.7938	-16.7980			0.0042	
Center Y	-2.1587	-2.1714			0.0127	
Diameter	0.1789	0.1660	0.0100	0.0000	0.0129	0.0029
Circularity	0.0036					
TP RFS	0.0268		0.0400			

Program: 10209833 jpl feedhorn 139 with datum hole pattern.iDate: Fri May 07 2004 Time: 14:48:51
Units: mm, dec deg

Feature	Actual	Nominal	Plus (+)	Minus (-)	Dev/Nom	Out/Tol
Circle 152	[System 14]					
Center X	-19.2999	-19.3052			0.0053	
Center Y	-2.1544	-2.1714			0.0170	
Diameter	0.1775	0.1660	0.0100	0.0000	0.0115	0.0015
Circularity	0.0062					
TP RFS	0.0357		0.0400			
Circle 153	[System 14]					
Center X	-21.8078	-21.8125			0.0047	
Center Y	-2.1602	-2.1714			0.0112	
Diameter	0.1735	0.1660	0.0100	0.0000	0.0075	
Circularity	0.0025					
TP RFS	0.0242		0.0400			
Circle 154	[System 14]					
Center X	-24.3094	-24.3197			0.0103	
Center Y	-2.1570	-2.1714			0.0144	
Diameter	0.1754	0.1660	0.0100	0.0000	0.0094	
Circularity	0.0048					
TP RFS	0.0354		0.0400			
Circle 155	[System 14]					
Center X	-26.8183	-26.8270			0.0087	
Center Y	-2.1602	-2.1714			0.0112	
Diameter	0.1737	0.1660	0.0100	0.0000	0.0077	
Circularity	0.0028					
TP RFS	0.0283		0.0400			
Circle 156	[System 14]					
Center X	-29.3317	-29.3342			0.0025	
Center Y	-2.1567	-2.1714			0.0147	
Diameter	0.1740	0.1660	0.0100	0.0000	0.0080	
Circularity	0.0017					
TP RFS	0.0298		0.0400			
Circle 157	[System 14]					
Center X	-31.8354	-31.8415			0.0061	
Center Y	-2.1578	-2.1714			0.0136	
Diameter	0.1725	0.1660	0.0100	0.0000	0.0065	
Circularity	0.0019					
TP RFS	0.0299		0.0400			
Circle 158	[System 14]					
Center X	-34.3301	-34.3487			0.0186	
Center Y	-2.1579	-2.1714			0.0135	
Diameter	0.1706	0.1660	0.0100	0.0000	0.0046	
Circularity	0.0033					
TP RFS	0.0460		0.0400			0.0060
Circle 159	[System 14]					
Center X	-36.8456	-36.8560			0.0104	
Center Y	-2.1579	-2.1714			0.0135	
Diameter	0.1746	0.1660	0.0100	0.0000	0.0086	
Circularity	0.0029					
TP RFS	0.0341		0.0400			
Circle 160	[System 14]					
Center X	-39.3548	-39.3632			0.0084	
Center Y	-2.1549	-2.1714			0.0165	
Diameter	0.1742	0.1660	0.0100	0.0000	0.0082	
Circularity	0.0033					
TP RFS	0.0369		0.0400			

Program: 10209833 jpl feedhorn 139 with datum hole pattern.iDate: Fri May 07 2004 Time: 14:48:51
Units: mm, dec deg

Feature	Actual	Nominal	Plus (+)	Minus (-)	Dev/Nom	Out/Tol
Circle 161	[System 14]					
Center X	-41.8572	-41.8705			0.0133	
Center Y	-2.1547	-2.1714			0.0167	
Diameter	0.1723	0.1660	0.0100	0.0000	0.0063	
Circularity	0.0024					
TP RFS	0.0426		0.0400			0.0026
Circle 162	[System 14]					
Center X	-4.2616	-4.2617			0.0001	
Center Y	-6.5091	-6.5144			0.0053	
Diameter	0.1792	0.1660	0.0100	0.0000	0.0132	0.0032
Circularity	0.0028					
TP RFS	0.0107		0.0400			
Circle 163	[System 14]					
Center X	-6.7739	-6.7690			-0.0049	
Center Y	-6.4930	-6.5144			0.0214	
Diameter	0.1769	0.1660	0.0100	0.0000	0.0109	0.0009
Circularity	0.0050					
TP RFS	0.0439		0.0400			0.0039
Circle 164	[System 14]					
Center X	-9.2780	-9.2762			-0.0018	
Center Y	-6.4972	-6.5144			0.0172	
Diameter	0.1710	0.1660	0.0100	0.0000	0.0050	
Circularity	0.0046					
TP RFS	0.0346		0.0400			
Circle 165	[System 14]					
Center X	-11.7785	-11.7835			0.0050	
Center Y	-6.4938	-6.5144			0.0206	
Diameter	0.1741	0.1660	0.0100	0.0000	0.0081	
Circularity	0.0050					
TP RFS	0.0423		0.0400			0.0023
Circle 166	[System 14]					
Center X	-14.2874	-14.2913			0.0039	
Center Y	-6.4931	-6.5144			0.0213	
Diameter	0.1723	0.1660	0.0100	0.0000	0.0063	
Circularity	0.0025					
TP RFS	0.0433		0.0400			0.0033
Circle 167	[System 14]					
Center X	-16.7946	-16.7980			0.0034	
Center Y	-6.4920	-6.5144			0.0224	
Diameter	0.1739	0.1660	0.0100	0.0000	0.0079	
Circularity	0.0030					
TP RFS	0.0453		0.0400			0.0053
Circle 168	[System 14]					
Center X	-19.2991	-19.3052			0.0061	
Center Y	-6.4933	-6.5144			0.0211	
Diameter	0.1769	0.1660	0.0100	0.0000	0.0109	0.0009
Circularity	0.0045					
TP RFS	0.0439		0.0400			0.0039
Circle 169	[System 14]					
Center X	-21.8099	-21.8125			0.0026	
Center Y	-6.4877	-6.5144			0.0267	
Diameter	0.1738	0.1660	0.0100	0.0000	0.0078	
Circularity	0.0025					
TP RFS	0.0536		0.0400			0.0136

Program: 10209833 jpl feedhorn 139 with datum hole pattern.iDate: Fri May 07 2004 Time: 14:48:51
Units: mm, dec deg

Feature	Actual	Nominal	Plus (+)	Minus (-)	Dev/Nom	Out/Tol
Circle 170	[System 14]					
Center X	-24.3090	-24.3197			0.0107	
Center Y	-6.4941	-6.5144			0.0203	
Diameter	0.1729	0.1660	0.0100	0.0000	0.0069	
Circularity	0.0137					
TP RFS	0.0459		0.0400			0.0059
Circle 171	[System 14]					
Center X	-26.8241	-26.8270			0.0029	
Center Y	-6.4833	-6.5144			0.0311	
Diameter	0.1774	0.1660	0.0100	0.0000	0.0114	0.0014
Circularity	0.0039					
TP RFS	0.0624		0.0400			0.0224
Circle 172	[System 14]					
Center X	-29.3326	-29.3342			0.0016	
Center Y	-6.4864	-6.5144			0.0280	
Diameter	0.1748	0.1660	0.0100	0.0000	0.0088	
Circularity	0.0041					
TP RFS	0.0560		0.0400			0.0160
Circle 173	[System 14]					
Center X	-31.8357	-31.8415			0.0058	
Center Y	-6.4872	-6.5144			0.0272	
Diameter	0.1746	0.1660	0.0100	0.0000	0.0086	
Circularity	0.0033					
TP RFS	0.0556		0.0400			0.0156
Circle 174	[System 14]					
Center X	-34.3437	-34.3487			0.0050	
Center Y	-6.4837	-6.5144			0.0307	
Diameter	0.1757	0.1660	0.0100	0.0000	0.0097	
Circularity	0.0037					
TP RFS	0.0623		0.0400			0.0223
Circle 175	[System 14]					
Center X	-36.8524	-36.8560			0.0036	
Center Y	-6.4901	-6.5144			0.0243	
Diameter	0.1730	0.1660	0.0100	0.0000	0.0070	
Circularity	0.0026					
TP RFS	0.0491		0.0400			0.0091
Circle 176	[System 14]					
Center X	-39.3572	-39.3632			0.0060	
Center Y	-6.4935	-6.5144			0.0209	
Diameter	0.1729	0.1660	0.0100	0.0000	0.0069	
Circularity	0.0025					
TP RFS	0.0435		0.0400			0.0035
Circle 177	[System 14]					
Center X	-41.8691	-41.8705			0.0014	
Center Y	-6.4994	-6.5144			0.0150	
Diameter	0.1766	0.1660	0.0100	0.0000	0.0106	0.0006
Circularity	0.0054					
TP RFS	0.0301		0.0400			
Circle 178	[System 14]					
Center X	-4.2643	-4.2617			-0.0026	
Center Y	2.1791	2.1714			0.0077	
Diameter	0.1764	0.1660	0.0100	0.0000	0.0104	0.0004
Circularity	0.0027					
TP RFS	0.0162		0.0400			

Program: 10209833 jpl feedhorn 139 with datum hole pattern.iDate: Fri May 07 2004 Time: 14:48:51
Units: mm, dec deg

Feature	Actual	Nominal	Plus (+)	Minus (-)	Dev/Nom	Out/Tol
Circle 179	[System 14]					
Center X	-6.7687	-6.7690			0.0003	
Center Y	2.1804	2.1714			0.0090	
Diameter	0.1711	0.1660	0.0100	0.0000	0.0051	
Circularity	0.0015					
TP RFS	0.0180		0.0400			
Circle 180	[System 14]					
Center X	-9.2712	-9.2762			0.0050	
Center Y	2.1785	2.1714			0.0071	
Diameter	0.1730	0.1660	0.0100	0.0000	0.0070	
Circularity	0.0016					
TP RFS	0.0173		0.0400			
Circle 181	[System 14]					
Center X	-11.7761	-11.7835			0.0074	
Center Y	2.1771	2.1714			0.0057	
Diameter	0.1707	0.1660	0.0100	0.0000	0.0047	
Circularity	0.0021					
TP RFS	0.0187		0.0400			
Circle 182	[System 14]					
Center X	-14.2877	-14.2913			0.0036	
Center Y	2.1780	2.1714			0.0066	
Diameter	0.1709	0.1660	0.0100	0.0000	0.0049	
Circularity	0.0018					
TP RFS	0.0151		0.0400			
Circle 183	[System 14]					
Center X	-16.7888	-16.7980			0.0092	
Center Y	2.1817	2.1714			0.0103	
Diameter	0.1712	0.1660	0.0100	0.0000	0.0052	
Circularity	0.0019					
TP RFS	0.0276		0.0400			
Circle 184	[System 14]					
Center X	-19.2981	-19.3052			0.0071	
Center Y	2.1827	2.1714			0.0113	
Diameter	0.1719	0.1660	0.0100	0.0000	0.0059	
Circularity	0.0023					
TP RFS	0.0267		0.0400			
Circle 185	[System 14]					
Center X	-21.8080	-21.8125			0.0045	
Center Y	2.1777	2.1714			0.0063	
Diameter	0.1732	0.1660	0.0100	0.0000	0.0072	
Circularity	0.0017					
TP RFS	0.0155		0.0400			
Circle 186	[System 14]					
Center X	-24.3100	-24.3197			0.0097	
Center Y	2.1813	2.1714			0.0099	
Diameter	0.1729	0.1660	0.0100	0.0000	0.0069	
Circularity	0.0024					
TP RFS	0.0277		0.0400			
Circle 187	[System 14]					
Center X	-26.8207	-26.8270			0.0063	
Center Y	2.1769	2.1714			0.0055	
Diameter	0.1716	0.1660	0.0100	0.0000	0.0056	
Circularity	0.0024					
TP RFS	0.0168		0.0400			

Program: 10209833 jpl feedhorn 139 with datum hole pattern.iDate: Fri May 07 2004 Time: 14:48:51
Units: mm, dec deg

Feature	Actual	Nominal	Plus (+)	Minus (-)	Dev/Nom	Out/Tol
Circle 188	[System 14]					
Center X	-29.3189	-29.3342			0.0153	
Center Y	2.1866	2.1714			0.0152	
Diameter	0.1769	0.1660	0.0100	0.0000	0.0109	0.0009
Circularity	0.0032					
TP RFS	0.0432		0.0400			0.0032
Circle 189	[System 14]					
Center X	-31.8300	-31.8415			0.0115	
Center Y	2.1857	2.1714			0.0143	
Diameter	0.1743	0.1660	0.0100	0.0000	0.0083	
Circularity	0.0046					
TP RFS	0.0367		0.0400			
Circle 190	[System 14]					
Center X	-34.3436	-34.3487			0.0051	
Center Y	2.1799	2.1714			0.0085	
Diameter	0.1740	0.1660	0.0100	0.0000	0.0080	
Circularity	0.0026					
TP RFS	0.0198		0.0400			
Circle 191	[System 14]					
Center X	-36.8492	-36.8560			0.0068	
Center Y	2.1790	2.1714			0.0076	
Diameter	0.1717	0.1660	0.0100	0.0000	0.0057	
Circularity	0.0036					
TP RFS	0.0205		0.0400			
Circle 192	[System 14]					
Center X	-39.3474	-39.3632			0.0158	
Center Y	2.1867	2.1714			0.0153	
Diameter	0.1696	0.1660	0.0100	0.0000	0.0036	
Circularity	0.0032					
TP RFS	0.0439		0.0400			0.0039
Circle 193	[System 14]					
Center X	-41.8570	-41.8705			0.0135	
Center Y	2.1866	2.1714			0.0152	
Diameter	0.1738	0.1660	0.0100	0.0000	0.0078	
Circularity	0.0031					
TP RFS	0.0406		0.0400			0.0006
Circle 194	[System 14]					
Center X	-4.2552	-4.2617			0.0065	
Center Y	6.5214	6.5146			0.0068	
Diameter	0.1684	0.1660	0.0100	0.0000	0.0024	
Circularity	0.0024					
TP RFS	0.0188		0.0400			
Circle 195	[System 14]					
Center X	-6.7706	-6.7690			-0.0016	
Center Y	6.5170	6.5144			0.0026	
Diameter	0.1670	0.1660	0.0100	0.0000	0.0010	
Circularity	0.0013					
TP RFS	0.0062		0.0400			
Circle 196	[System 14]					
Center X	-9.2749	-9.2762			0.0013	
Center Y	6.5109	6.5144			-0.0035	
Diameter	0.1674	0.1660	0.0100	0.0000	0.0014	
Circularity	0.0011					
TP RFS	0.0075		0.0400			

Program: 10209833 jpl feedhorn 139 with datum hole pattern.iDate: Fri May 07 2004 Time: 14:48:51
Units: mm, dec deg

Feature	Actual	Nominal	Plus (+)	Minus (-)	Dev/Nom	Out/Tol
Circle 197	[System 14]					
Center X	-11.7737	-11.7835			0.0098	
Center Y	6.5125	6.5144			-0.0019	
Diameter	0.1685	0.1660	0.0100	0.0000	0.0025	
Circularity	0.0025					
TP RFS	0.0199		0.0400			
Circle 198	[System 14]					
Center X	-14.2845	-14.2913			0.0068	
Center Y	6.5152	6.5144			0.0008	
Diameter	0.1682	0.1660	0.0100	0.0000	0.0022	
Circularity	0.0019					
TP RFS	0.0137		0.0400			
Circle 199	[System 14]					
Center X	-16.7918	-16.7980			0.0062	
Center Y	6.5126	6.5144			-0.0018	
Diameter	0.1694	0.1660	0.0100	0.0000	0.0034	
Circularity	0.0016					
TP RFS	0.0128		0.0400			
Circle 200	[System 14]					
Center X	-19.2964	-19.3052			0.0088	
Center Y	6.5127	6.5144			-0.0017	
Diameter	0.1695	0.1660	0.0100	0.0000	0.0035	
Circularity	0.0016					
TP RFS	0.0178		0.0400			
Circle 201	[System 14]					
Center X	-21.8015	-21.8125			0.0110	
Center Y	6.5177	6.5144			0.0033	
Diameter	0.1704	0.1660	0.0100	0.0000	0.0044	
Circularity	0.0019					
TP RFS	0.0229		0.0400			
Circle 202	[System 14]					
Center X	-24.3075	-24.3197			0.0122	
Center Y	6.5130	6.5144			-0.0014	
Diameter	0.1744	0.1660	0.0100	0.0000	0.0084	
Circularity	0.0026					
TP RFS	0.0246		0.0400			
Circle 203	[System 14]					
Center X	-26.8203	-26.8270			0.0067	
Center Y	6.5178	6.5144			0.0034	
Diameter	0.1695	0.1660	0.0100	0.0000	0.0035	
Circularity	0.0023					
TP RFS	0.0150		0.0400			
Circle 204	[System 14]					
Center X	-29.3203	-29.3342			0.0139	
Center Y	6.5167	6.5144			0.0023	
Diameter	0.1698	0.1660	0.0100	0.0000	0.0038	
Circularity	0.0031					
TP RFS	0.0282		0.0400			
Circle 205	[System 14]					
Center X	-31.8288	-31.8415			0.0127	
Center Y	6.5166	6.5144			0.0022	
Diameter	0.1731	0.1660	0.0100	0.0000	0.0071	
Circularity	0.0035					
TP RFS	0.0257		0.0400			

Program: 10209833 jpl feedhorn 139 with datum hole pattern.iDate: Fri May 07 2004 Time: 14:48:51
Units: mm, dec deg

Feature	Actual	Nominal	Plus (+)	Minus (-)	Dev/Nom	Out/Tol
Circle 206	[System 14]					
Center X	-34.3394	-34.3487			0.0093	
Center Y	6.5133	6.5144			-0.0011	
Diameter	0.1689	0.1660	0.0100	0.0000	0.0029	
Circularity	0.0094					
TP RFS	0.0187		0.0400			
Circle 207	[System 14]					
Center X	-36.8459	-36.8560			0.0101	
Center Y	6.5168	6.5144			0.0024	
Diameter	0.1715	0.1660	0.0100	0.0000	0.0055	
Circularity	0.0016					
TP RFS	0.0207		0.0400			
Circle 208	[System 14]					
Center X	-39.3488	-39.3632			0.0144	
Center Y	6.5257	6.5144			0.0113	
Diameter	0.1781	0.1660	0.0100	0.0000	0.0121	0.0021
Circularity	0.0025					
TP RFS	0.0365		0.0400			
Circle 209	[System 14]					
Center X	-41.8514	-41.8705			0.0191	
Center Y	6.5275	6.5144			0.0131	
Diameter	0.1709	0.1660	0.0100	0.0000	0.0049	
Circularity	0.0029					
TP RFS	0.0463		0.0400			0.0063
Circle 91	[System 14]					
Center X	0.0000	-0.0000			0.0000	
Center Y	-0.0000	-0.0000			0.0000	
Diameter	1.6069	1.6000	0.1000	0.0000	0.0069	
Circle 92	[System 14]					
Center X	-6.0562	-6.0625			0.0063	
Center Y	13.5067	13.5000			0.0067	
Diameter	2.1061	2.0000	0.2500	0.0000	0.1061	
Circularity	0.0254					
TP MMC	0.0185		0.0500		-0.0876	
Circle 93	[System 14]					
Center X	-40.0624	-40.0625			0.0001	
Center Y	13.5052	13.5000			0.0052	
Diameter	2.1044	2.0000	0.2500	0.0000	0.1044	
Circularity	0.0112					
TP MMC	0.0104		0.0500		-0.0940	
Circle 96	[System 14]					
Center X	-6.0676	-6.0625			-0.0051	
Center Y	-13.5033	-13.5000			-0.0033	
Diameter	2.1062	2.0000	0.2500	0.0000	0.1062	
Circularity	0.0379					
TP MMC	0.0122		0.0500		-0.0940	
Circle 97	[System 14]					
Center X	-40.0636	-40.0625			-0.0011	
Center Y	-13.4946	-13.5000			0.0054	
Diameter	2.1030	2.0000	0.2500	0.0000	0.1030	
Circularity	0.0106					
TP MMC	0.0110		0.0500		-0.0920	
Circle 98	[System 14]					
Center X	-31.0716	-31.0625			-0.0091	
Center Y	-13.5030	-13.5000			-0.0030	
Diameter	3.1745	3.1200	0.0800	0.0000	0.0545	
Circularity	0.0162					
TP MMC	0.0191		0.3500		-0.0354	

Program: 10209833 jpl feedhorn 139 with datum hole pattern.iDate: Fri May 07 2004 Time: 14:48:51
Units: mm, dec deg

Feature	Actual	Nominal	Plus (+)	Minus (-)	Dev/Nom	Out/Tol
Circle 100	[System 14]					
Center X	-15.0651	-15.0625			-0.0026	
Center Y	-13.4990	-13.5000			0.0010	
Diameter	3.1723	3.1200	0.0800	0.0000	0.0523	
Circularity	0.0336					
TP MMC	0.0056		0.3500		-0.0468	
Arc 101	[System 14]					
Radius	24.6178	24.7000	0.0000	0.2000	-0.0822	
Arc 102	[System 14]					
Radius	24.5779	24.7000	0.0000	0.2000	-0.1221	
Arc 103	[System 14]					
Radius	9.0357	9.0000	1.0000	0.0000	0.0357	
Arc 104	[System 14]					
Radius	9.0244	9.0000	1.0000	0.0000	0.0244	
Arc 105	[System 14]					
Radius	9.0157	9.0000	1.0000	0.0000	0.0157	
Arc 106	[System 14]					
Radius	9.0598	9.0000	1.0000	0.0000	0.0598	
Point 107	[System 14]					
Location Y	16.9447	17.0000	0.0000	0.2000	-0.0553	
Point 108	[System 14]					
Location Y	16.9305	17.0000	0.0000	0.2000	-0.0695	
Point 109	[System 14]					
Location Y	-16.9300	-17.0000	0.2000	0.0000	0.0700	
Point 110	[System 14]					
Location Y	-16.9202	-17.0000	0.2000	0.0000	0.0798	
Point 111	[System 14]					
Location Y	-10.1508	-10.2500	1.0000	0.0000	0.0992	
Point 112	[System 14]					
Location Y	10.1455	10.2500	0.0000	1.0000	-0.1045	
Point 113	[System 14]					
Location X	-43.3029	-43.4300	1.0000	0.0000	0.1271	
Point 114	[System 14]					
Location X	-2.7518	-2.7000	0.0000	1.0000	-0.0518	
Distance 120	[System 14]					
Distance X	1.8701	1.8500	0.1000	0.1000	0.0201	
Point 122	[System 14]					
Location X	-46.1293	-46.1250	0.0500	0.0500	-0.0043	
Location Y	0.0031	0.0000	0.0250	0.0250	0.0031	
Distance 125	[System 14]					
Distance Y	1.6031	1.6000	0.0100	0.0000	0.0031	

Program: Untitled
Units: mm, dec deg

OTHER SIDE

Date: Fri May 07 2004 Time: 17:20:01

Feature		Actual	Nominal	Plus (+)	Minus (-)	Dev/Nom	Out/Tol
Circle 6 Diameter	CIRCLE 66	[MCS] 0.1781	0.1660	0.0100	0.0000	0.0121	0.0021
Circle 7 Diameter	CIRCLE 75	[MCS] 0.1755	0.1660	0.0100	0.0000	0.0095	
Circle 8 Diameter	CIRCLE 149	[MCS] 0.1763	0.1660	0.0100	0.0000	0.0103	0.0003
Circle 9 Diameter	CIRCLE 65	[MCS] 0.1734	0.1660	0.0100	0.0000	0.0074	

SEQ 175

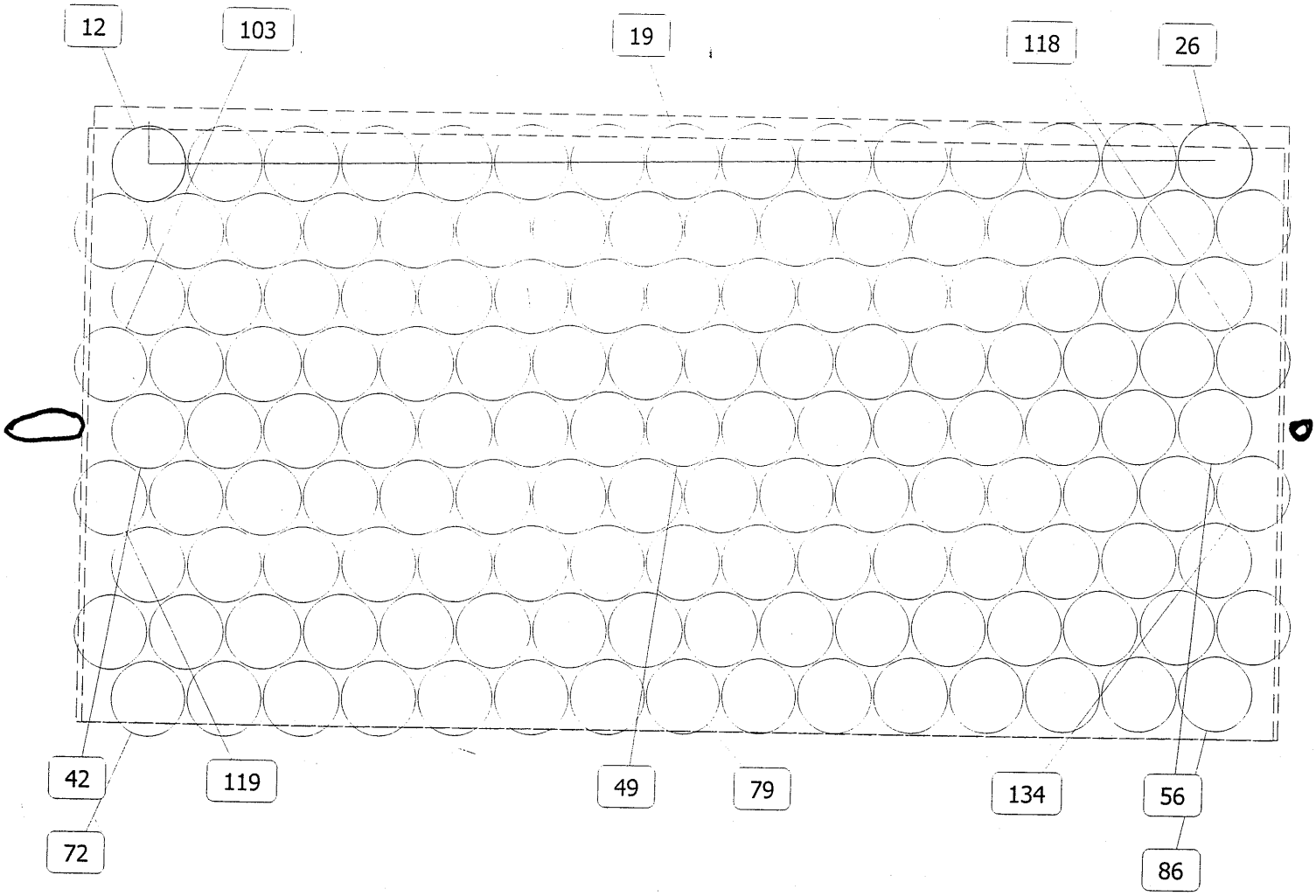

Program: 10209833 jpl feedhorn 139 large hole pattern.iwp Date: Fri May 07 2004 Time: 13:37:08
Units: mm, dec deg

Feature	Actual	Nominal	Plus (+)	Minus (-)	Dev/Nom	Out/Tol
Circle 12	[System 8]					
Center X	-0.0026	-0.0053			0.0026	
Center Y	0.0006	-0.0047			0.0053	
Diameter	2.4312	2.4000	0.0050	0.0050	0.0312	0.0262
Circle 13	[System 8]					
Center X	2.5021	2.5020			0.0001	
Center Y	0.0005	-0.0047			0.0052	
Diameter	2.4311	2.4000	0.0050	0.0050	0.0311	0.0261
Circle 14	[System 8]					
Center X	5.0078	5.0092			-0.0015	
Center Y	0.0013	-0.0047			0.0060	
Diameter	2.4290	2.4000	0.0050	0.0050	0.0290	0.0240
Circle 15	[System 8]					
Center X	7.5161	7.5165			-0.0004	
Center Y	0.0019	-0.0047			0.0066	
Diameter	2.4242	2.4000	0.0050	0.0050	0.0242	0.0192
Circle 16	[System 8]					
Center X	10.0175	10.0237			-0.0063	
Center Y	0.0001	-0.0047			0.0048	
Diameter	2.4353	2.4000	0.0050	0.0050	0.0353	0.0303
Circle 17	[System 8]					
Center X	12.5282	12.5310			-0.0027	
Center Y	0.0071	-0.0047			0.0118	
Diameter	2.4284	2.4000	0.0050	0.0050	0.0284	0.0234
Circle 18	[System 8]					
Center X	15.0304	15.0382			-0.0079	
Center Y	0.0086	-0.0047			0.0134	
Diameter	2.4332	2.4000	0.0050	0.0050	0.0332	0.0282
Circle 19	[System 8]					
Center X	17.5317	17.5455			-0.0138	
Center Y	0.0101	-0.0047			0.0148	
Diameter	2.4328	2.4000	0.0050	0.0050	0.0328	0.0278
Circle 20	[System 8]					
Center X	20.0342	20.0527			-0.0186	
Center Y	0.0065	-0.0047			0.0113	
Diameter	2.4383	2.4000	0.0050	0.0050	0.0383	0.0333
Circle 21	[System 8]					
Center X	22.5471	22.5600			-0.0129	
Center Y	0.0024	-0.0047			0.0071	
Diameter	2.4297	2.4000	0.0050	0.0050	0.0297	0.0247
Circle 22	[System 8]					
Center X	25.0491	25.0672			-0.0182	
Center Y	0.0131	-0.0047			0.0178	
Diameter	2.4297	2.4000	0.0050	0.0050	0.0297	0.0247
Circle 23	[System 8]					
Center X	27.5553	27.5745			-0.0192	
Center Y	0.0040	-0.0047			0.0087	
Diameter	2.4267	2.4000	0.0050	0.0050	0.0267	0.0217
Circle 24	[System 8]					
Center X	30.0604	30.0817			-0.0214	
Center Y	0.0032	-0.0047			0.0079	
Diameter	2.4306	2.4000	0.0050	0.0050	0.0306	0.0256

Program: 10209833 jpl feedhorn 139 large hole pattern.iwp Date: Fri May 07 2004 Time: 13:37:08
Units: mm, dec deg

Feature	Actual	Nominal	Plus (+)	Minus (-)	Dev/Nom	Out/Tol
Circle 25	[System 8]					
Center X	32.5744	32.5890			-0.0146	
Center Y	0.0037	-0.0047			0.0084	
Diameter	2.4340	2.4000	0.0050	0.0050	0.0340	0.0290
Circle 26	[System 8]					
Center X	35.0756	35.0962			-0.0206	
Center Y	-0.0002	-0.0047			0.0045	
Diameter	2.4385	2.4000	0.0050	0.0050	0.0385	0.0335
Circle 27	[System 8]					
Center X	-0.0036	-0.0053			0.0017	
Center Y	-4.3389	-4.3476			0.0087	
Diameter	2.4247	2.4000	0.0050	0.0050	0.0247	0.0197
Circle 28	[System 8]					
Center X	2.5045	2.5020			0.0025	
Center Y	-4.3360	-4.3476			0.0116	
Diameter	2.4290	2.4000	0.0050	0.0050	0.0290	0.0240
Circle 29	[System 8]					
Center X	5.0179	5.0092			0.0087	
Center Y	-4.3343	-4.3476			0.0133	
Diameter	2.4336	2.4000	0.0050	0.0050	0.0336	0.0286
Circle 30	[System 8]					
Center X	7.5166	7.5165			0.0001	
Center Y	-4.3386	-4.3476			0.0090	
Diameter	2.4359	2.4000	0.0050	0.0050	0.0359	0.0309
Circle 31	[System 8]					
Center X	10.0237	10.0237			-0.0001	
Center Y	-4.3388	-4.3476			0.0088	
Diameter	2.4333	2.4000	0.0050	0.0050	0.0333	0.0283
Circle 32	[System 8]					
Center X	12.5310	12.5310			-0.0000	
Center Y	-4.3360	-4.3476			0.0116	
Diameter	2.4251	2.4000	0.0050	0.0050	0.0251	0.0201
Circle 33	[System 8]					
Center X	15.0351	15.0382			-0.0032	
Center Y	-4.3334	-4.3476			0.0142	
Diameter	2.4355	2.4000	0.0050	0.0050	0.0355	0.0305
Circle 34	[System 8]					
Center X	17.5364	17.5455			-0.0091	
Center Y	-4.3309	-4.3476			0.0167	
Diameter	2.4370	2.4000	0.0050	0.0050	0.0370	0.0320
Circle 35	[System 8]					
Center X	20.0430	20.0527			-0.0097	
Center Y	-4.3338	-4.3476			0.0138	
Diameter	2.4350	2.4000	0.0050	0.0050	0.0350	0.0300
Circle 36	[System 8]					
Center X	22.5465	22.5600			-0.0135	
Center Y	-4.3365	-4.3476			0.0111	
Diameter	2.4353	2.4000	0.0050	0.0050	0.0353	0.0303
Circle 37	[System 8]					
Center X	25.0500	25.0672			-0.0173	
Center Y	-4.3339	-4.3476			0.0137	
Diameter	2.4389	2.4000	0.0050	0.0050	0.0389	0.0339

Program: 10209833 jpl feedhorn 139 large hole pattern.iwp Date: Fri May 07 2004 Time: 13:37:08
Units: mm, dec deg

Feature	Actual	Nominal	Plus (+)	Minus (-)	Dev/Nom	Out/Tol
Circle 38	[System 8]					
Center X	27.5581	27.5745			-0.0164	
Center Y	-4.3316	-4.3476			0.0160	
Diameter	2.4348	2.4000	0.0050	0.0050	0.0348	0.0298
Circle 39	[System 8]					
Center X	30.0674	30.0817			-0.0143	
Center Y	-4.3401	-4.3476			0.0075	
Diameter	2.4323	2.4000	0.0050	0.0050	0.0323	0.0273
Circle 40	[System 8]					
Center X	32.5703	32.5890			-0.0187	
Center Y	-4.3379	-4.3476			0.0097	
Diameter	2.4316	2.4000	0.0050	0.0050	0.0316	0.0266
Circle 41	[System 8]					
Center X	35.0778	35.0962			-0.0184	
Center Y	-4.3374	-4.3476			0.0103	
Diameter	2.4297	2.4000	0.0050	0.0050	0.0297	0.0247
Circle 42	[System 8]					
Center X	-0.0017	-0.0053			0.0035	
Center Y	-8.6796	-8.6905			0.0109	
Diameter	2.4243	2.4000	0.0050	0.0050	0.0243	0.0193
Circle 43	[System 8]					
Center X	2.5038	2.5020			0.0018	
Center Y	-8.6801	-8.6905			0.0104	
Diameter	2.4347	2.4000	0.0050	0.0050	0.0347	0.0297
Circle 44	[System 8]					
Center X	5.0098	5.0092			0.0006	
Center Y	-8.6776	-8.6905			0.0130	
Diameter	2.4328	2.4000	0.0050	0.0050	0.0328	0.0278
Circle 45	[System 8]					
Center X	7.5181	7.5165			0.0016	
Center Y	-8.6796	-8.6905			0.0109	
Diameter	2.4290	2.4000	0.0050	0.0050	0.0290	0.0240
Circle 46	[System 8]					
Center X	10.0232	10.0237			-0.0006	
Center Y	-8.6783	-8.6905			0.0122	
Diameter	2.4370	2.4000	0.0050	0.0050	0.0370	0.0320
Circle 47	[System 8]					
Center X	12.5256	12.5310			-0.0054	
Center Y	-8.6728	-8.6905			0.0177	
Diameter	2.4304	2.4000	0.0050	0.0050	0.0304	0.0254
Circle 48	[System 8]					
Center X	15.0318	15.0382			-0.0064	
Center Y	-8.6764	-8.6905			0.0142	
Diameter	2.4335	2.4000	0.0050	0.0050	0.0335	0.0285
Circle 49	[System 8]					
Center X	17.5344	17.5455			-0.0111	
Center Y	-8.6744	-8.6905			0.0161	
Diameter	2.4302	2.4000	0.0050	0.0050	0.0302	0.0252
Circle 50	[System 8]					
Center X	20.0398	20.0527			-0.0129	
Center Y	-8.6771	-8.6905			0.0134	
Diameter	2.4312	2.4000	0.0050	0.0050	0.0312	0.0262

Program: 10209833 jpl feedhorn 139 large hole pattern.iwp Date: Fri May 07 2004 Time: 13:37:08
Units: mm, dec deg

Feature	Actual	Nominal	Plus (+)	Minus (-)	Dev/Nom	Out/Tol
Circle 51	[System 8]					
Center X	22.5495	22.5600			-0.0105	
Center Y	-8.6720	-8.6905			0.0185	
Diameter	2.4333	2.4000	0.0050	0.0050	0.0333	0.0283
Circle 52	[System 8]					
Center X	25.0542	25.0672			-0.0130	
Center Y	-8.6756	-8.6905			0.0149	
Diameter	2.4362	2.4000	0.0050	0.0050	0.0362	0.0312
Circle 53	[System 8]					
Center X	27.5573	27.5745			-0.0172	
Center Y	-8.6746	-8.6905			0.0159	
Diameter	2.4287	2.4000	0.0050	0.0050	0.0287	0.0237
Circle 54	[System 8]					
Center X	30.0653	30.0817			-0.0164	
Center Y	-8.6748	-8.6905			0.0157	
Diameter	2.4421	2.4000	0.0050	0.0050	0.0421	0.0371
Circle 55	[System 8]					
Center X	32.5653	32.5890			-0.0237	
Center Y	-8.6772	-8.6905			0.0133	
Diameter	2.4364	2.4000	0.0050	0.0050	0.0364	0.0314
Circle 56	[System 8]					
Center X	35.0774	35.0962			-0.0188	
Center Y	-8.6751	-8.6905			0.0154	
Diameter	2.4267	2.4000	0.0050	0.0050	0.0267	0.0217
Circle 57	[System 8]					
Center X	-0.0035	-0.0053			0.0018	
Center Y	-13.0157	-13.0334			0.0177	
Diameter	2.4221	2.4000	0.0050	0.0050	0.0221	0.0171
Circle 58	[System 8]					
Center X	2.5065	2.5020			0.0045	
Center Y	-13.0155	-13.0334			0.0179	
Diameter	2.4242	2.4000	0.0050	0.0050	0.0242	0.0192
Circle 59	[System 8]					
Center X	5.0097	5.0092			0.0005	
Center Y	-13.0216	-13.0334			0.0118	
Diameter	2.4377	2.4000	0.0050	0.0050	0.0377	0.0327
Circle 60	[System 8]					
Center X	7.5188	7.5165			0.0023	
Center Y	-13.0187	-13.0334			0.0147	
Diameter	2.4200	2.4000	0.0050	0.0050	0.0200	0.0150
Circle 61	[System 8]					
Center X	10.0209	10.0237			-0.0028	
Center Y	-13.0284	-13.0334			0.0050	
Diameter	2.4287	2.4000	0.0050	0.0050	0.0287	0.0237
Circle 62	[System 8]					
Center X	12.5240	12.5310			-0.0070	
Center Y	-13.0260	-13.0334			0.0074	
Diameter	2.4372	2.4000	0.0050	0.0050	0.0372	0.0322
Circle 63	[System 8]					
Center X	15.0278	15.0382			-0.0105	
Center Y	-13.0241	-13.0334			0.0093	
Diameter	2.4390	2.4000	0.0050	0.0050	0.0390	0.0340

Program: 10209833 jpl feedhorn 139 large hole pattern.iwp Date: Fri May 07 2004 Time: 13:37:08
Units: mm, dec deg

Feature	Actual	Nominal	Plus (+)	Minus (-)	Dev/Nom	Out/Tol
Circle 64	[System 8]					
Center X	17.5358	17.5455			-0.0097	
Center Y	-13.0202	-13.0334			0.0132	
Diameter	2.4337	2.4000	0.0050	0.0050	0.0337	0.0287
Circle 65	[System 8]					
Center X	20.0376	20.0527			-0.0151	
Center Y	-13.0214	-13.0334			0.0120	
Diameter	2.4319	2.4000	0.0050	0.0050	0.0319	0.0269
Circle 66	[System 8]					
Center X	22.5410	22.5600			-0.0190	
Center Y	-13.0201	-13.0334			0.0133	
Diameter	2.4250	2.4000	0.0050	0.0050	0.0250	0.0200
Circle 67	[System 8]					
Center X	25.0519	25.0672			-0.0154	
Center Y	-13.0179	-13.0334			0.0155	
Diameter	2.4331	2.4000	0.0050	0.0050	0.0331	0.0281
Circle 68	[System 8]					
Center X	27.5623	27.5745			-0.0122	
Center Y	-13.0203	-13.0334			0.0131	
Diameter	2.4412	2.4000	0.0050	0.0050	0.0412	0.0362
Circle 69	[System 8]					
Center X	30.0549	30.0817			-0.0268	
Center Y	-13.0160	-13.0334			0.0174	
Diameter	2.4325	2.4000	0.0050	0.0050	0.0325	0.0275
Circle 70	[System 8]					
Center X	32.5731	32.5890			-0.0159	
Center Y	-13.0117	-13.0334			0.0217	
Diameter	2.4309	2.4000	0.0050	0.0050	0.0309	0.0259
Circle 71	[System 8]					
Center X	35.0736	35.0962			-0.0226	
Center Y	-13.0172	-13.0334			0.0162	
Diameter	2.4195	2.4000	0.0050	0.0050	0.0195	0.0145
Circle 72	[System 8]					
Center X	-0.0041	-0.0053			0.0011	
Center Y	-17.3575	-17.3763			0.0188	
Diameter	2.4275	2.4000	0.0050	0.0050	0.0275	0.0225
Circle 73	[System 8]					
Center X	2.5007	2.5020			-0.0013	
Center Y	-17.3556	-17.3763			0.0207	
Diameter	2.4247	2.4000	0.0050	0.0050	0.0247	0.0197
Circle 74	[System 8]					
Center X	5.0114	5.0092			0.0022	
Center Y	-17.3627	-17.3763			0.0137	
Diameter	2.4376	2.4000	0.0050	0.0050	0.0376	0.0326
Circle 75	[System 8]					
Center X	7.5141	7.5165			-0.0024	
Center Y	-17.3627	-17.3763			0.0136	
Diameter	2.4319	2.4000	0.0050	0.0050	0.0319	0.0269
Circle 76	[System 8]					
Center X	10.0191	10.0237			-0.0047	
Center Y	-17.3682	-17.3763			0.0082	
Diameter	2.4265	2.4000	0.0050	0.0050	0.0265	0.0215

Program: 10209833 jpl feedhorn 139 large hole pattern.iwp Date: Fri May 07 2004 Time: 13:37:08
Units: mm, dec deg

Feature	Actual	Nominal	Plus (+)	Minus (-)	Dev/Nom	Out/Tol
Circle 77	[System 8]					
Center X	12.5284	12.5310			-0.0026	
Center Y	-17.3624	-17.3763			0.0139	
Diameter	2.4266	2.4000	0.0050	0.0050	0.0266	0.0216
Circle 78	[System 8]					
Center X	15.0318	15.0382			-0.0065	
Center Y	-17.3659	-17.3763			0.0105	
Diameter	2.4413	2.4000	0.0050	0.0050	0.0413	0.0363
Circle 79	[System 8]					
Center X	17.5399	17.5455			-0.0056	
Center Y	-17.3630	-17.3763			0.0133	
Diameter	2.4320	2.4000	0.0050	0.0050	0.0320	0.0270
Circle 80	[System 8]					
Center X	20.0427	20.0527			-0.0100	
Center Y	-17.3663	-17.3763			0.0100	
Diameter	2.4333	2.4000	0.0050	0.0050	0.0333	0.0283
Circle 81	[System 8]					
Center X	22.5526	22.5600			-0.0074	
Center Y	-17.3625	-17.3763			0.0138	
Diameter	2.4336	2.4000	0.0050	0.0050	0.0336	0.0286
Circle 82	[System 8]					
Center X	25.0572	25.0672			-0.0100	
Center Y	-17.3583	-17.3763			0.0180	
Diameter	2.4363	2.4000	0.0050	0.0050	0.0363	0.0313
Circle 83	[System 8]					
Center X	27.5581	27.5745			-0.0164	
Center Y	-17.3620	-17.3763			0.0143	
Diameter	2.4356	2.4000	0.0050	0.0050	0.0356	0.0306
Circle 84	[System 8]					
Center X	30.0655	30.0817			-0.0163	
Center Y	-17.3595	-17.3763			0.0168	
Diameter	2.4268	2.4000	0.0050	0.0050	0.0268	0.0218
Circle 85	[System 8]					
Center X	32.5726	32.5890			-0.0164	
Center Y	-17.3540	-17.3763			0.0223	
Diameter	2.4364	2.4000	0.0050	0.0050	0.0364	0.0314
Circle 86	[System 8]					
Center X	35.0777	35.0962			-0.0185	
Center Y	-17.3565	-17.3763			0.0198	
Diameter	2.4338	2.4000	0.0050	0.0050	0.0338	0.0288
Circle 87	[System 8]					
Center X	-1.2505	-1.2576			0.0071	
Center Y	-2.1697	-2.1761			0.0064	
Diameter	2.4327	2.4000	0.0050	0.0050	0.0327	0.0277
Circle 88	[System 8]					
Center X	1.2551	1.2496			0.0055	
Center Y	-2.1741	-2.1761			0.0020	
Diameter	2.4378	2.4000	0.0050	0.0050	0.0378	0.0328
Circle 89	[System 8]					
Center X	3.7602	3.7568			0.0034	
Center Y	-2.1707	-2.1761			0.0054	
Diameter	2.4339	2.4000	0.0050	0.0050	0.0339	0.0289

Program: 10209833 jpl feedhorn 139 large hole pattern.iwp Date: Fri May 07 2004 Time: 13:37:08
Units: mm, dec deg

Feature	Actual	Nominal	Plus (+)	Minus (-)	Dev/Nom	Out/Tol
Circle 90	[System 8]					
Center X	6.2657	6.2640			0.0016	
Center Y	-2.1673	-2.1761			0.0088	
Diameter	2.4345	2.4000	0.0050	0.0050	0.0345	0.0295
Circle 91	[System 8]					
Center X	8.7712	8.7712			-0.0001	
Center Y	-2.1697	-2.1761			0.0064	
Diameter	2.4381	2.4000	0.0050	0.0050	0.0381	0.0331
Circle 92	[System 8]					
Center X	11.2819	11.2784			0.0035	
Center Y	-2.1635	-2.1761			0.0126	
Diameter	2.4326	2.4000	0.0050	0.0050	0.0326	0.0276
Circle 93	[System 8]					
Center X	13.7879	13.7856			0.0022	
Center Y	-2.1671	-2.1761			0.0090	
Diameter	2.4359	2.4000	0.0050	0.0050	0.0359	0.0309
Circle 94	[System 8]					
Center X	16.2919	16.2928			-0.0009	
Center Y	-2.1626	-2.1761			0.0135	
Diameter	2.4356	2.4000	0.0050	0.0050	0.0356	0.0306
Circle 95	[System 8]					
Center X	18.7902	18.8000			-0.0099	
Center Y	-2.1615	-2.1761			0.0146	
Diameter	2.4392	2.4000	0.0050	0.0050	0.0392	0.0342
Circle 96	[System 8]					
Center X	21.2963	21.3072			-0.0109	
Center Y	-2.1686	-2.1761			0.0075	
Diameter	2.4325	2.4000	0.0050	0.0050	0.0325	0.0275
Circle 97	[System 8]					
Center X	23.8023	23.8144			-0.0122	
Center Y	-2.1666	-2.1761			0.0095	
Diameter	2.4397	2.4000	0.0050	0.0050	0.0397	0.0347
Circle 98	[System 8]					
Center X	26.3032	26.3216			-0.0184	
Center Y	-2.1618	-2.1761			0.0143	
Diameter	2.4269	2.4000	0.0050	0.0050	0.0269	0.0219
Circle 99	[System 8]					
Center X	28.8094	28.8288			-0.0194	
Center Y	-2.1699	-2.1761			0.0062	
Diameter	2.4346	2.4000	0.0050	0.0050	0.0346	0.0296
Circle 100	[System 8]					
Center X	31.3148	31.3360			-0.0213	
Center Y	-2.1701	-2.1761			0.0060	
Diameter	2.4306	2.4000	0.0050	0.0050	0.0306	0.0256
Circle 101	[System 8]					
Center X	33.8273	33.8432			-0.0159	
Center Y	-2.1697	-2.1761			0.0064	
Diameter	2.4334	2.4000	0.0050	0.0050	0.0334	0.0284
Circle 102	[System 8]					
Center X	36.3268	36.3504			-0.0236	
Center Y	-2.1640	-2.1761			0.0121	
Diameter	2.4367	2.4000	0.0050	0.0050	0.0367	0.0317

Program: 10209833 jpl feedhorn 139 large hole pattern.iwp Date: Fri May 07 2004 Time: 13:37:08
Units: mm, dec deg

Feature	Actual	Nominal	Plus (+)	Minus (-)	Dev/Nom	Out/Tol
Circle 103	[System 8]					
Center X	-1.2573	-1.2576			0.0002	
Center Y	-6.5078	-6.5191			0.0113	
Diameter	2.4209	2.4000	0.0050	0.0050	0.0209	0.0159
Circle 104	[System 8]					
Center X	1.2540	1.2496			0.0044	
Center Y	-6.5104	-6.5191			0.0088	
Diameter	2.4253	2.4000	0.0050	0.0050	0.0253	0.0203
Circle 105	[System 8]					
Center X	3.7653	3.7568			0.0085	
Center Y	-6.5067	-6.5191			0.0124	
Diameter	2.4386	2.4000	0.0050	0.0050	0.0386	0.0336
Circle 106	[System 8]					
Center X	6.2657	6.2640			0.0016	
Center Y	-6.5026	-6.5191			0.0165	
Diameter	2.4341	2.4000	0.0050	0.0050	0.0341	0.0291
Circle 107	[System 8]					
Center X	8.7666	8.7712			-0.0046	
Center Y	-6.5127	-6.5191			0.0065	
Diameter	2.4336	2.4000	0.0050	0.0050	0.0336	0.0286
Circle 108	[System 8]					
Center X	11.2776	11.2784			-0.0009	
Center Y	-6.5079	-6.5191			0.0112	
Diameter	2.4302	2.4000	0.0050	0.0050	0.0302	0.0252
Circle 109	[System 8]					
Center X	13.7844	13.7856			-0.0012	
Center Y	-6.5058	-6.5191			0.0134	
Diameter	2.4333	2.4000	0.0050	0.0050	0.0333	0.0283
Circle 110	[System 8]					
Center X	16.2870	16.2928			-0.0058	
Center Y	-6.5007	-6.5191			0.0184	
Diameter	2.4458	2.4000	0.0050	0.0050	0.0458	0.0408
Circle 111	[System 8]					
Center X	18.7907	18.8000			-0.0093	
Center Y	-6.5084	-6.5191			0.0108	
Diameter	2.4423	2.4000	0.0050	0.0050	0.0423	0.0373
Circle 112	[System 8]					
Center X	21.2923	21.3072			-0.0149	
Center Y	-6.5071	-6.5191			0.0120	
Diameter	2.4391	2.4000	0.0050	0.0050	0.0391	0.0341
Circle 113	[System 8]					
Center X	23.8026	23.8144			-0.0119	
Center Y	-6.5151	-6.5191			0.0040	
Diameter	2.4429	2.4000	0.0050	0.0050	0.0429	0.0379
Circle 114	[System 8]					
Center X	26.3100	26.3216			-0.0116	
Center Y	-6.5083	-6.5191			0.0108	
Diameter	2.4458	2.4000	0.0050	0.0050	0.0458	0.0408
Circle 115	[System 8]					
Center X	28.8092	28.8288			-0.0197	
Center Y	-6.5041	-6.5191			0.0150	
Diameter	2.4330	2.4000	0.0050	0.0050	0.0330	0.0280

Program: 10209833 jpl feedhorn 139 large hole pattern.iwp Date: Fri May 07 2004 Time: 13:37:08
Units: mm, dec deg

Feature	Actual	Nominal	Plus (+)	Minus (-)	Dev/Nom	Out/Tol
Circle 116	[System 8]					
Center X	31.3158	31.3360			-0.0203	
Center Y	-6.5076	-6.5191			0.0115	
Diameter	2.4391	2.4000	0.0050	0.0050	0.0391	0.0341
Circle 117	[System 8]					
Center X	33.8217	33.8432			-0.0216	
Center Y	-6.5050	-6.5191			0.0141	
Diameter	2.4339	2.4000	0.0050	0.0050	0.0339	0.0289
Circle 118	[System 8]					
Center X	36.3282	36.3504			-0.0223	
Center Y	-6.5050	-6.5191			0.0141	
Diameter	2.4275	2.4000	0.0050	0.0050	0.0275	0.0225
Circle 119	[System 8]					
Center X	-1.2536	-1.2576			0.0039	
Center Y	-10.8490	-10.8619			0.0129	
Diameter	2.4308	2.4000	0.0050	0.0050	0.0308	0.0258
Circle 120	[System 8]					
Center X	1.2524	1.2496			0.0028	
Center Y	-10.8491	-10.8619			0.0128	
Diameter	2.4237	2.4000	0.0050	0.0050	0.0237	0.0187
Circle 121	[System 8]					
Center X	3.7637	3.7568			0.0068	
Center Y	-10.8521	-10.8619			0.0098	
Diameter	2.4362	2.4000	0.0050	0.0050	0.0362	0.0312
Circle 122	[System 8]					
Center X	6.2644	6.2640			0.0003	
Center Y	-10.8499	-10.8619			0.0120	
Diameter	2.4355	2.4000	0.0050	0.0050	0.0355	0.0305
Circle 123	[System 8]					
Center X	8.7685	8.7712			-0.0028	
Center Y	-10.8553	-10.8619			0.0066	
Diameter	2.4316	2.4000	0.0050	0.0050	0.0316	0.0266
Circle 124	[System 8]					
Center X	11.2739	11.2784			-0.0045	
Center Y	-10.8549	-10.8619			0.0070	
Diameter	2.4373	2.4000	0.0050	0.0050	0.0373	0.0323
Circle 125	[System 8]					
Center X	13.7786	13.7856			-0.0071	
Center Y	-10.8565	-10.8619			0.0054	
Diameter	2.4375	2.4000	0.0050	0.0050	0.0375	0.0325
Circle 126	[System 8]					
Center X	16.2814	16.2928			-0.0114	
Center Y	-10.8461	-10.8619			0.0158	
Diameter	2.4328	2.4000	0.0050	0.0050	0.0328	0.0278
Circle 127	[System 8]					
Center X	18.7879	18.8000			-0.0121	
Center Y	-10.8470	-10.8619			0.0149	
Diameter	2.4336	2.4000	0.0050	0.0050	0.0336	0.0286
Circle 128	[System 8]					
Center X	21.2936	21.3072			-0.0136	
Center Y	-10.8488	-10.8619			0.0132	
Diameter	2.4291	2.4000	0.0050	0.0050	0.0291	0.0241

Program: 10209833 jpl feedhorn 139 large hole pattern.iwp Date: Fri May 07 2004 Time: 13:37:08
Units: mm, dec deg

Feature	Actual	Nominal	Plus (+)	Minus (-)	Dev/Nom	Out/Tol
Circle 129	[System 8]					
Center X	23.7960	23.8144			-0.0185	
Center Y	-10.8449	-10.8619			0.0170	
Diameter	2.4345	2.4000	0.0050	0.0050	0.0345	0.0295
Circle 130	[System 8]					
Center X	26.3072	26.3216			-0.0145	
Center Y	-10.8474	-10.8619			0.0145	
Diameter	2.4253	2.4000	0.0050	0.0050	0.0253	0.0203
Circle 131	[System 8]					
Center X	28.8048	28.8288			-0.0241	
Center Y	-10.8490	-10.8619			0.0129	
Diameter	2.4338	2.4000	0.0050	0.0050	0.0338	0.0288
Circle 132	[System 8]					
Center X	31.3162	31.3360			-0.0198	
Center Y	-10.8494	-10.8619			0.0125	
Diameter	2.4307	2.4000	0.0050	0.0050	0.0307	0.0257
Circle 133	[System 8]					
Center X	33.8232	33.8432			-0.0201	
Center Y	-10.8427	-10.8619			0.0192	
Diameter	2.4326	2.4000	0.0050	0.0050	0.0326	0.0276
Circle 134	[System 8]					
Center X	36.3296	36.3504			-0.0209	
Center Y	-10.8449	-10.8619			0.0170	
Diameter	2.4303	2.4000	0.0050	0.0050	0.0303	0.0253
Circle 135	[System 8]					
Center X	-1.2575	-1.2576			0.0001	
Center Y	-15.1936	-15.2049			0.0114	
Diameter	2.4214	2.4000	0.0050	0.0050	0.0214	0.0164
Circle 136	[System 8]					
Center X	1.2533	1.2496			0.0037	
Center Y	-15.1887	-15.2049			0.0162	
Diameter	2.4291	2.4000	0.0050	0.0050	0.0291	0.0241
Circle 137	[System 8]					
Center X	3.7567	3.7568			-0.0001	
Center Y	-15.1872	-15.2049			0.0177	
Diameter	2.4243	2.4000	0.0050	0.0050	0.0243	0.0193
Circle 138	[System 8]					
Center X	6.2626	6.2640			-0.0014	
Center Y	-15.1917	-15.2049			0.0132	
Diameter	2.4282	2.4000	0.0050	0.0050	0.0282	0.0232
Circle 139	[System 8]					
Center X	8.7720	8.7712			0.0007	
Center Y	-15.1959	-15.2049			0.0090	
Diameter	2.4343	2.4000	0.0050	0.0050	0.0343	0.0293
Circle 140	[System 8]					
Center X	11.2770	11.2784			-0.0015	
Center Y	-15.1915	-15.2049			0.0134	
Diameter	2.4308	2.4000	0.0050	0.0050	0.0308	0.0258
Circle 141	[System 8]					
Center X	13.7835	13.7856			-0.0021	
Center Y	-15.1970	-15.2049			0.0079	
Diameter	2.4322	2.4000	0.0050	0.0050	0.0322	0.0272

Program: 10209833 jpl feedhorn 139 large hole pattern.iwp Date: Fri May 07 2004 Time: 13:37:08
Units: mm, dec deg

Feature	Actual	Nominal	Plus (+)	Minus (-)	Dev/Nom	Out/Tol
Circle 142	[System 8]					
Center X	16.2850	16.2928			-0.0079	
Center Y	-15.1919	-15.2049			0.0130	
Diameter	2.4330	2.4000	0.0050	0.0050	0.0330	0.0280
Circle 143	[System 8]					
Center X	18.7896	18.8000			-0.0105	
Center Y	-15.1918	-15.2049			0.0131	
Diameter	2.4352	2.4000	0.0050	0.0050	0.0352	0.0302
Circle 144	[System 8]					
Center X	21.2964	21.3072			-0.0108	
Center Y	-15.1981	-15.2049			0.0068	
Diameter	2.4368	2.4000	0.0050	0.0050	0.0368	0.0318
Circle 145	[System 8]					
Center X	23.8019	23.8144			-0.0126	
Center Y	-15.1920	-15.2049			0.0129	
Diameter	2.4321	2.4000	0.0050	0.0050	0.0321	0.0271
Circle 146	[System 8]					
Center X	26.3039	26.3216			-0.0177	
Center Y	-15.1940	-15.2049			0.0109	
Diameter	2.4346	2.4000	0.0050	0.0050	0.0346	0.0296
Circle 147	[System 8]					
Center X	28.8109	28.8288			-0.0179	
Center Y	-15.1895	-15.2049			0.0154	
Diameter	2.4338	2.4000	0.0050	0.0050	0.0338	0.0288
Circle 148	[System 8]					
Center X	31.3119	31.3360			-0.0242	
Center Y	-15.1915	-15.2049			0.0134	
Diameter	2.4332	2.4000	0.0050	0.0050	0.0332	0.0282
Circle 149	[System 8]					
Center X	33.8272	33.8432			-0.0161	
Center Y	-15.1861	-15.2049			0.0188	
Diameter	2.4265	2.4000	0.0050	0.0050	0.0265	0.0215
Circle 150	[System 8]					
Center X	36.3336	36.3504			-0.0169	
Center Y	-15.1881	-15.2049			0.0168	
Diameter	2.4260	2.4000	0.0050	0.0050	0.0260	0.0210

End Item Data Package (EIDP)

SPIRE - 300mK PSW-PFM filter stack

SPIRE Ref.: SPIRE-UCF-
Cardiff Ref.: HSO-CDF-EIDP-062 Issue 1.0
15 June 2004

Prepared by: Peter Hargrave SPIRE Technical Manager

Approved by: Carole Tucker Cardiff Filter Manager

Ian Walker Cardiff SPIRE/HFI Programme Manager

Distribution list

JPL	James Bock	RAL	Eric Sawyer
	Hien Nguyen		Eric Clark
	Martin Herman		Judy Long
	Mark Weilert		Bruce Swinyard
Cardiff	Carole Tucker	LAM	Kjetil Dohlen
	Peter Ade		
	Matt Griffin		
	Ian Walker		

Change Record

Issue	Section	Date	Changes
1.0		15th June 2004	First Issue after DRB approval

Table of contents

Section	Contents	Req.	Comments
1	Shipping Documents	**X**	
2	Transportation, Packing, Handling & Integration Procedures	**X**	
3	Certificate of Conformance / Delivery Review Board MoM Ai-Lists	**X**	
4	Qualification Status List / Test Matrix	**X**	
5	Top Level Drawings (inc. Family Tree)	**X**	
6	Interface Drawings	**X**	
7	Functional, Block & Mechanical Drawings	**X**	
8	Electrical Circuit Drawings		
9	As Built Parts List	**X**	
10	Serialised Components List		
11	List of Waivers		
12	Copies of Waivers		
13	Operational Manual		
14	Historical Record	**X**	
15	Logbook / Diary of Events	**X**	
16	Operating Time / Cycle Record	**X**	
17	Connector Mating Record		
18	Age Sensitive Items Record		
19	Pressure Vessel History / Test Record		
20	Calibration Data Record	**X**	
21	Temporary Installation Record	**X**	
22	Open Work / Deferred Work / Open Tests	**X**	
23	List of Non-Conformance Reports	**X**	
24	Copies of Non-Conformance Reports	**X**	
25	Test Reports	**X**	
26	Proof Load Certificates		
27	Reference List of EIDP’s		

	(Lower Level / Associated)		
28	Mass Records / Power Budget	**X**	
29	Cleanliness Statement	**X**	
30	Other Useful Information	**X**	

SECTION 01 - Shipping Documents

Labelling on box:-

Instructions to FedEx – Important!

At LAX, please handover to:-

PackAir Airfreight INC.,
5510 West 104 St.,
Los Angeles CA90045
USA

Power of Attorney - Roger Bachar
Telephone (310) 342 6051

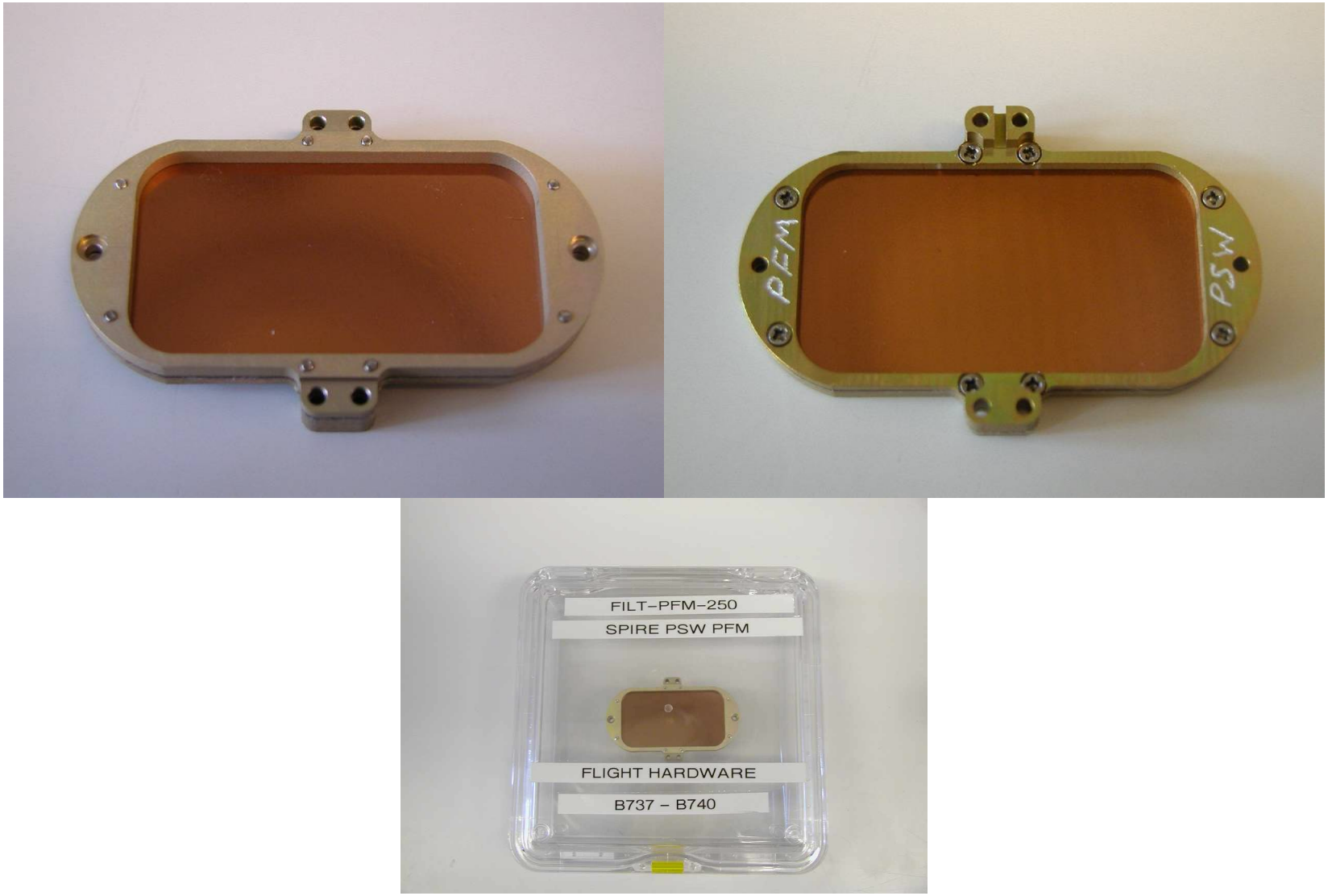

Figure 1 PSW PFM filter stack prior to shipping to JPL

SECTION 02 - Transportation, Packing, Handling & Integration Procedures

This package contains flight hardware.
To be opened only by authorised SPIRE personnel in clean room conditions.
Do not touch filter surface.
Handle only by Aluminium frame.
To be integrated to SPIRE flight model PMW BDA according to JPL procedure.

Hand over to JPL Cognisant Engineer – Mark Weilert

Mark Weilert
M/S 79-24
Jet Propulsion Laboratory
4800 Oak Grove Dr.
Pasadena Ca 91109-8099

Mark.A.Weilert@jpl.nasa.gov
office: (818) 354-5060
fax: (818) 393-4878

SECTION 03 - Certificate of Conformance

Cardiff University Astronomy Instrumentation Group hereby certifies that the following equipment,	
Spacecraft / Project:	**Herschel**
Instrument:	**SPIRE**
Model:	**PFM**
Subsystem:	**300mK PSW filter stack**
Serial No:	**FILT-PFM-250**
As described in this End Item Data Package: **HSO-CDF-EIDP-062**	
Complies with the requirements set out in: **SPIRE-RAL-PRJ-000034**	

Responsible Authority		***Signature***
Cardiff Filter Management	Prof P.A.R.Ade	
	Dr C.E.Tucker	
Cardiff Product Assurance	Dr I.Walker	
Cardiff SPIRE Management	Dr P.Hargrave	

SECTION 04 - Qualification Status List

Test	Status	Applicable document / Test reference	Test Institute
	PFM-PSW - FILT-PFM-250		
Spectral behaviour - Near-band transmission	Tested at component and assembly level. Compliant.	HSO-CDF-SP-002-2.2 See historical record for test references	UWC
Spectral behaviour - out-of-band blocking, at ?<15µm	Open test. Off-cuts to be tested once facility commissioned	HSO-CDF-SP-002-2.2 See historical record for test references	UWC
Dimension and tolerances to specification	Compliant	HSO-CDF-ICD-012-3.0	UWC
Filter flatness	Not applicable for this assembly	HSO-CDF-ICD-012-3.0	UWC
Inspection for surface defects	Passed		UWC
Mass	Compliant	HSO-CDF-ICD-012-3.0	
Thermal cycling (5 cycles 300K-77K-300K)	Passed	See historical record for test references	UWC
Cold vibration	Not tested at unit level, but qualified in SPIRE CQM cold vibration campaign	MSSL-Technote-SPIRE-26 SPIRE-RAL-REP-002007	MSSL/RAL – Cold vibration RAL – Post vibration inspection
Environmental condition - Vacuum $3x10^{-1}$mBar	Passed	See historical record for test references	UWC
Differential pressure (a pumping-out rate of 10mB/sec)	Passed	See historical record for test references	UWC
Pre-bake out (not exceeding 80°C)	Passed		UWC
Outgassing	Test not performed. All materials used within ESA / NASA specifications		
Cleanliness checks, by visual inspection.	Passed		UWC
Degradation due to high energy radiation.	Not tested. Heritage from previous space missions (ISO, Cassini)		

Compliance Matrix

The PSW filter stack comprises the PFIL4S and PFIL5S components, which have been bonded together to minimise fringing between these components. PFIL4S is a higher frequency blocking filter, and the exact position of the edge is not important (see HSO-CDF-RFW-063). The edge position of PFIL4S has been selected to provide optimal overall stack transmission, taking into account all other preceding components in the PSW filter channel.
The edge is defined by PFIL5S.

Name	Location	Temp.	Filter type	Component Edges			Bonded stack edges cm-1	Comments	Thickness (mm) HSO-CDF-ICD-012 Issue 3.0		Bonded stack assembly Actual thickness (mm)
					Required	Actual					
				Trans.	cm-1	cm-1			Component	Assembly	
PFIL4S	Over SW array	300 mK	Low-pass edge Blocker	90%	47.5	54.1		Blocker. Edge out of spec. - see HSO-CDF-RFW-063	0.236 ± 0.05	5.48±0.10	5.55
				50%	50.0	57.8					
				10%	52.5	54.1					
PFIL5S	Over SW array	300 mK	Low-pass edge definer	90%	45.6	46.3	43.8	PSW edge definer. Component meets spec.	0.246 ± 0.05		
				50%	48.0	47.9	47.5				
				10%	50.4	49.4	48.8				

SECTION 05 - Top Level Drawings (Inc. Family Tree)

TOP LEVEL DRAWING LIST

Drawing No.	Title
FILT-CQM/PFM-200-03.001	300mK Filter Assembly

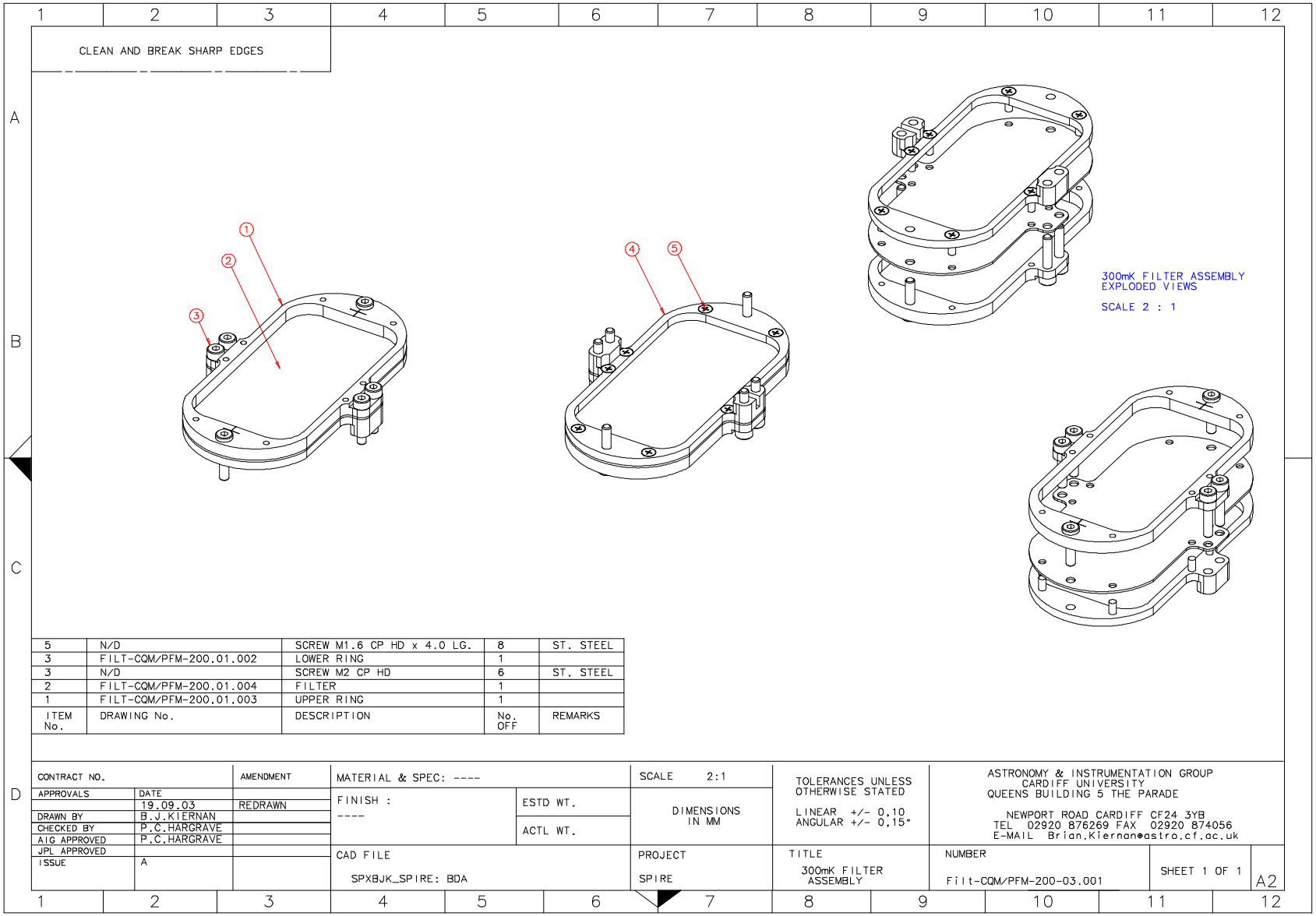

Figure 2 300mK filter stack assembly

SECTION 06 - Interface Drawings

INTERFACE DRAWING LIST

Drawing No.	Title
FILT-CQM/PFM-200	300mK Filter ICD

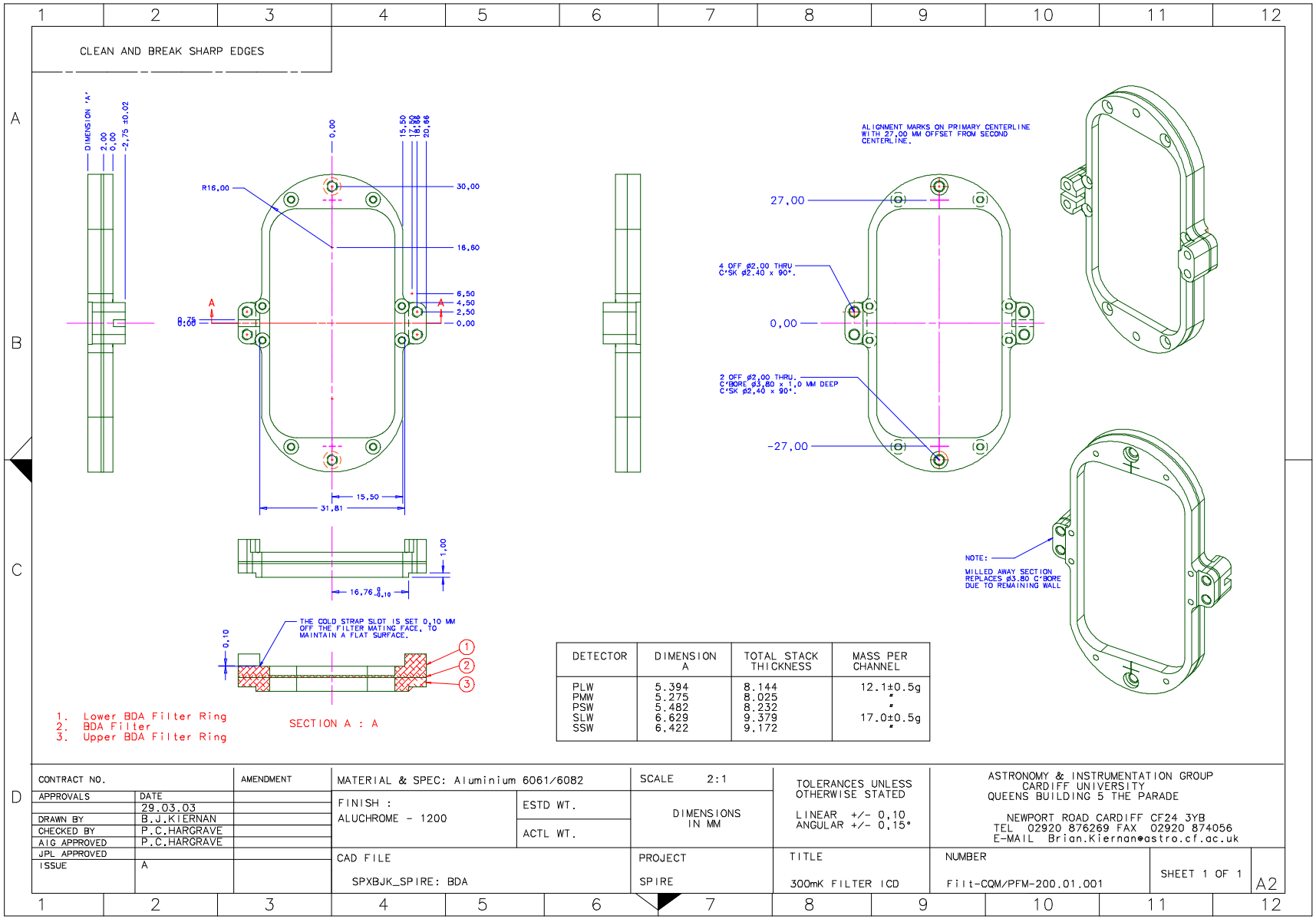

DETECTOR	DIMENSION A	TOTAL STACK THICKNESS	MASS PER CHANNEL
PLW	5.394	8.144	12.1±0.5g
PMW	5.275	8.025	"
PSW	5.482	8.232	"
SLW	6.629	9.379	17.0±0.5g
SSW	6.422	9.172	"

Figure 3 Interface drawing for 300mK filters

SECTION 07 - Functional, Block & Mechanical Drawings

Component drawings are given in this section.

FUNCTIONAL & BLOCK DRAWING LIST

Drawing No.	Title

MECHANICAL COMPONENT DRAWING LIST

Drawing No.	Title
FILT-CQM/PFM-200-01-004	300mK Filter
FILT-CQM/PFM-200-01-003	300mK Filter Upper Ring
FILT-CQM/PFM-200-01-002	300mK Filter Lower Ring

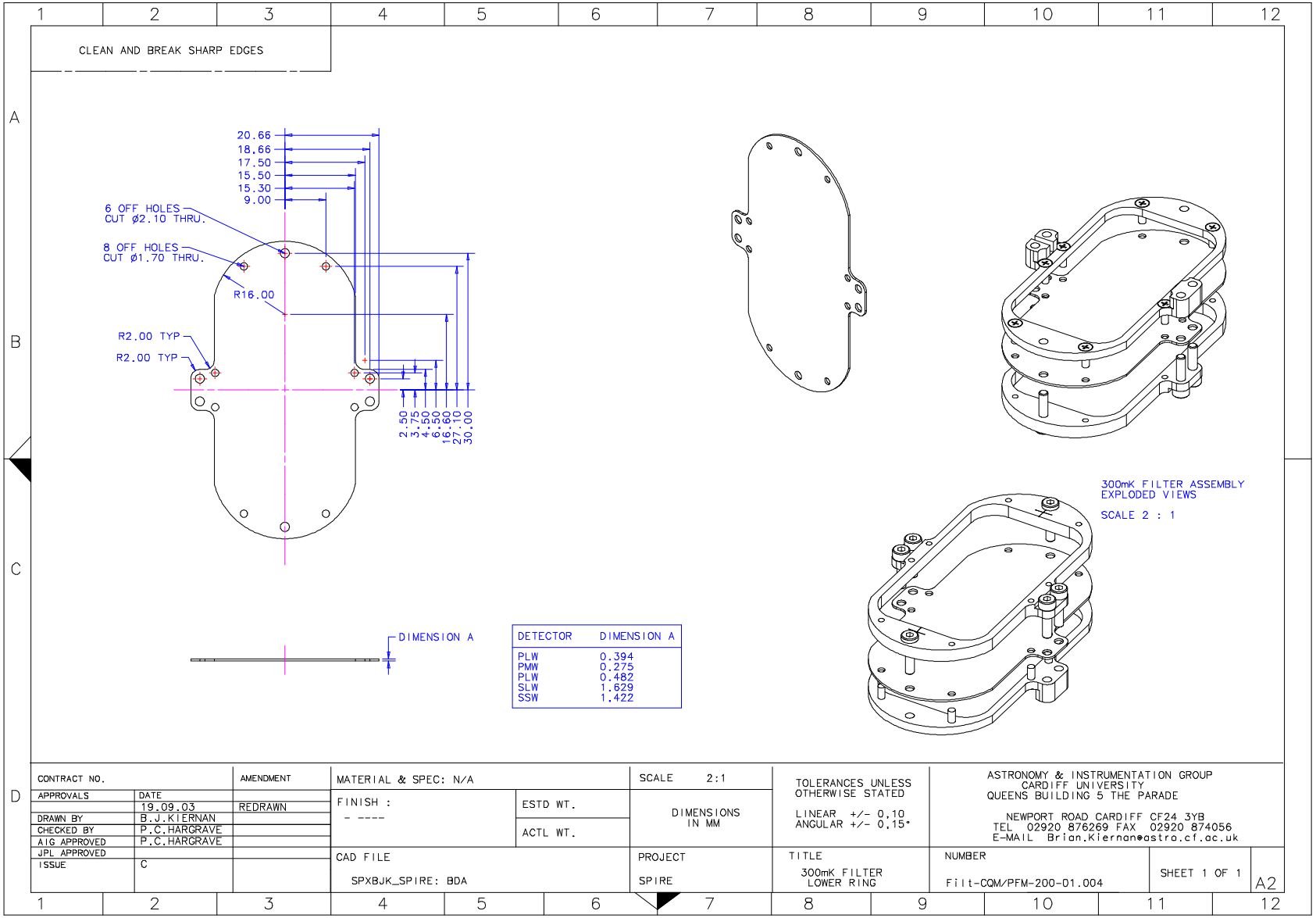

DETECTOR	DIMENSION A
PLW	0.394
PMW	0.275
PLW	0.482
SLW	1.629
SSW	1.422

Figure 4 300mK Filter

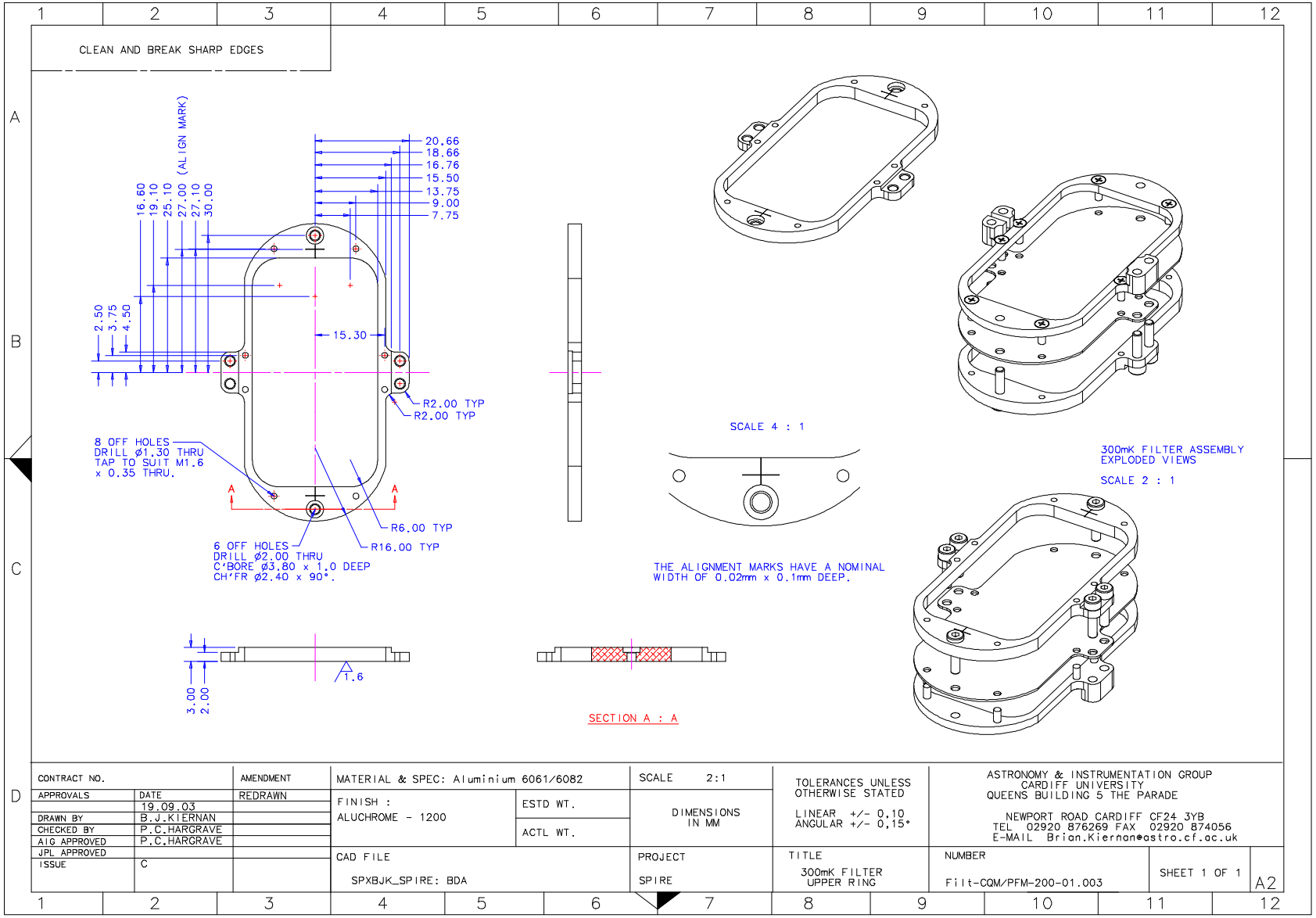

Figure 5 300mK Filter Upper Ring

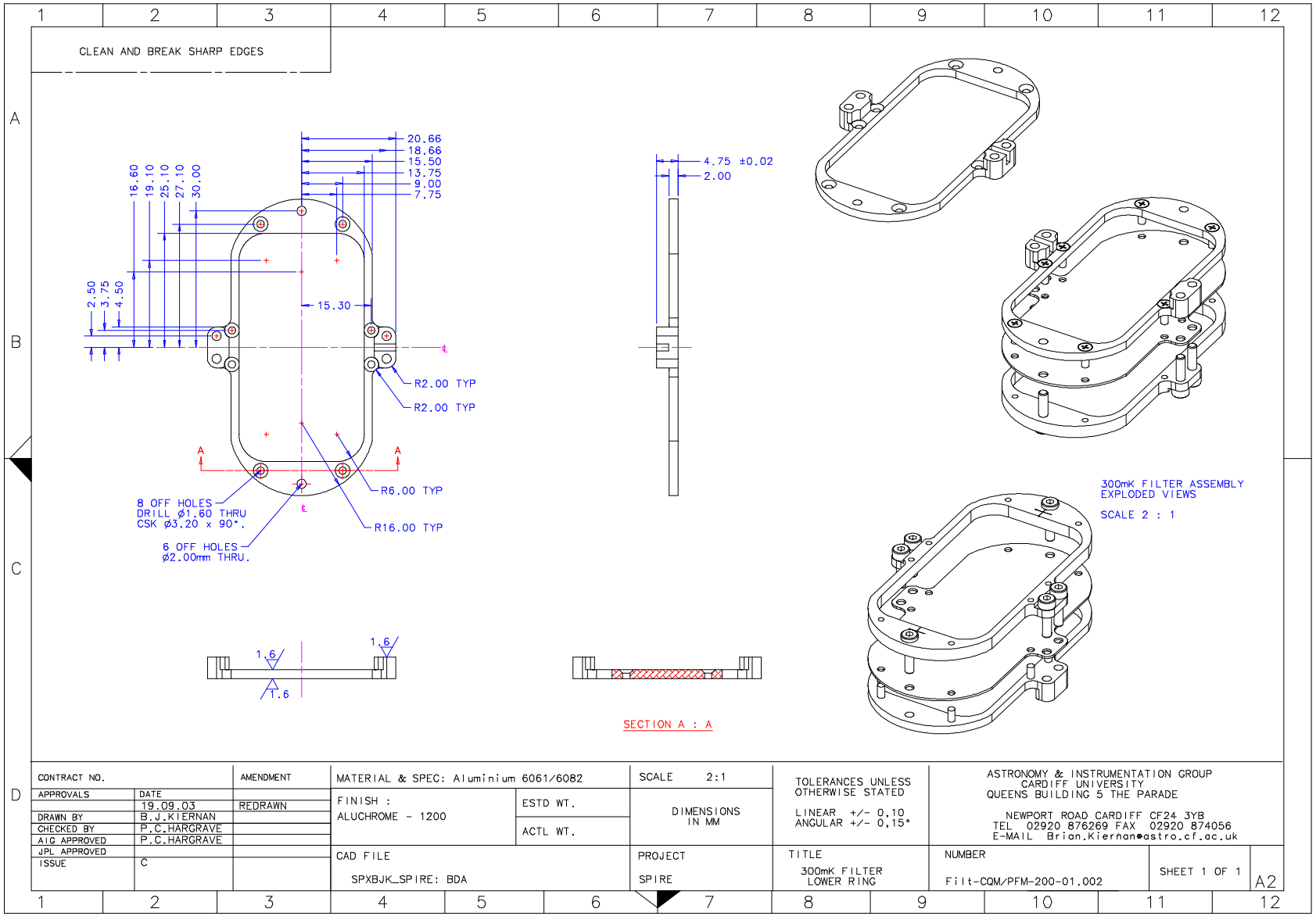

Figure 6 300mK Filter Lower Ring

SECTION 09 - As Built Configuration Items Status List

Item	Reference	Location	Notes
Filter drawings and manufacturing files		\\Darkstar\Astroworld\Projects\SPIRE\Cardiff_workpackages\Configured_documents\Filters\Drawings\300MK-filter-CQM-PFM.doc	
Material certificates of conformance		Available at Cardiff for inspection	
FILT-PFM-250 Spectroscopic test data PSW-PFM assembly		\\Darkstar\Astroworld\Projects\SPIRE\Cardiff_workpackages\Configured_documents\Issued\ Data\ FILT-PFM-250_PSW_assembly_210504.xls	

Part number	Description	Details
FILT-PFM-250	***PFM PSW FILTER ASSEMBLY***	
FILT-PFM-251	PSW PFM lower filter ring	Aluminium-6082 – Aluchrom 1200 coated
FILT-PFM-252	PSW-PFM upper filter ring	Aluminium-6082 – Aluchrom 1200 coated
FILT-PFM-253	PFIL4S – PFM – W859 filter	57.8 cm^{-1} LPE blocking filter
FILT-PFM-254	PFIL5S – PFM – W857 filter	47.9 cm^{-1} LPE blocking filter

SECTION 11 - List of Waivers

HSO-CDF-RFW-063	SPIRE PFM Blocking Filters RFW	

SECTION 12 - Copies of Waivers

SECTION 13 - Operations Manual

SECTION 14 - Historical Record

The following table contains *brief* historical details of the manufacture, assembly and testing of the PFM 300mK PSW filter assembly, including the levels of environmental cleanliness.
A *full* historical record of every stage of manufacture for each individual grid integral to the final mounted filter is traceable at UWC, in both hard copy log-book format and on a Microsoft Access database.

PSW PFM filter stack

Date	Action	UWC Test reference
24/05/02	Upper and lower filter clamp rings manufactured – Cardiff MEC. Ref. Q/1731.1	
16/3/04	Filter W857 manufactured in class 1000 clean room	
18/3/04	Filter W857 spectroscopically tested in the range 15-140cm-1	T0289r10
19/3/04	Filter W857 spectroscopically tested in the range 5-40cm-1	T0288r10
18/3/04	Filter W859 manufactured in class 1000 clean room	
19/3/04	Filter W859 spectroscopically tested in the range 15-140cm-1	
19/3/04	Filter W859 spectroscopically tested in the range 5-40cm-1	T0288r28
14/5/04	Filters W857 and W859 bonded together	
17/5/04	Bonded filters W857 and W859 spectroscopically tested in the range 15-140cm-1	T0325r10
17/5/04	Bonded filters W857 and W859 cut to PSW drawing.	
17/5/04	Bonded filters W857 and W859 thermally shocked 5 times between 300K and 77K	THERM 0187
17/5/04	PFM-PSW spectroscopically tested in the range 10-145cm-1 at three locations over area	T0325r10, T0325r13, T0325r16,
19/5/04	Bonded filters W857 and W859 spectroscopically tested in the range 20-650cm-1	T0328r4
19/5/04	Filters mounted as SPIRE_PFM_PSW filter stack	
19/5/04	SPIRE_PFM_PSW spectroscopically tested in the range 15-140cm-1	T0328r10
19/5/04	SPIRE_PFM_PSW thermally cycled 300K-77K-300K 3 times	THERM 0188
19/5/04	SPIRE_PFM_PSW spectroscopically tested in the range 15-140cm-1	T0328r13
19/5/04	SPIRE_PFM_PSW spectroscopically tested in the range 5-40cm-1	T0329r9
20/05/04	PFM-PSW baked for 17hrs at 350K	

21/05/04	PFM-PSW stack final clean, 12Hr bake-out	
24/5/04	PFM PSW 300mK stack DRB meeting	HSO-MOM-064
15/06/04	PFM-PSW shipped to JPL	

SECTION 15 - Logbook / Diary of Events

Not provided – available from subsystem provider upon request.

SECTION 16 - Operating Time / Cycle Record

SECTION 20 - Calibration Data Record

The recommended total stack transmission for the PSW channel to be used for calibration purposes is indicated in this section, with traces shown for the ranges 0-650cm-1, 0-140cm-1, and 0-70cm-1.
These are the measured transmission spectra prior to final cleaning and packing.
The raw data is stored in the file \\Darkstar\Astroworld\Projects\SPIRE\Cardiff_workpackages\Configured_documents\Issued\ Data\ FILT-PFM-250_PSW_assembly_210504.xls (Microsoft Excel workbook). This file is available from Cardiff, and is under configuration control on Livelink (managed by RAL).
Calibration data for all SPIRE flight model filters may be found in the file
\\Darkstar\Astroworld\Projects\SPIRE\Cardiff_workpackages\Configured_documents\Issued\ Data\ PFM-filters-summary.xls

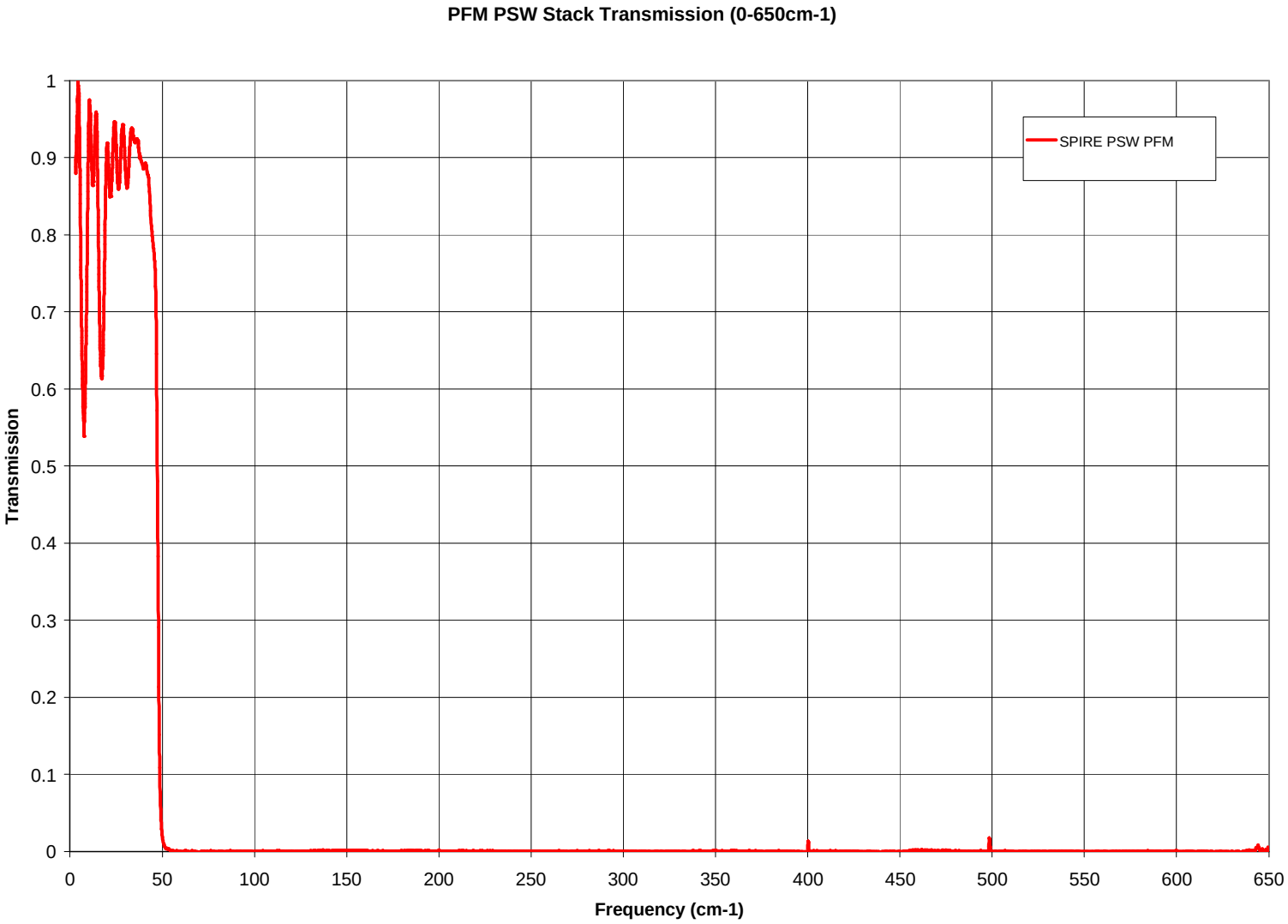

Figure 7 Spectroscopic data for PFM-PSW stack

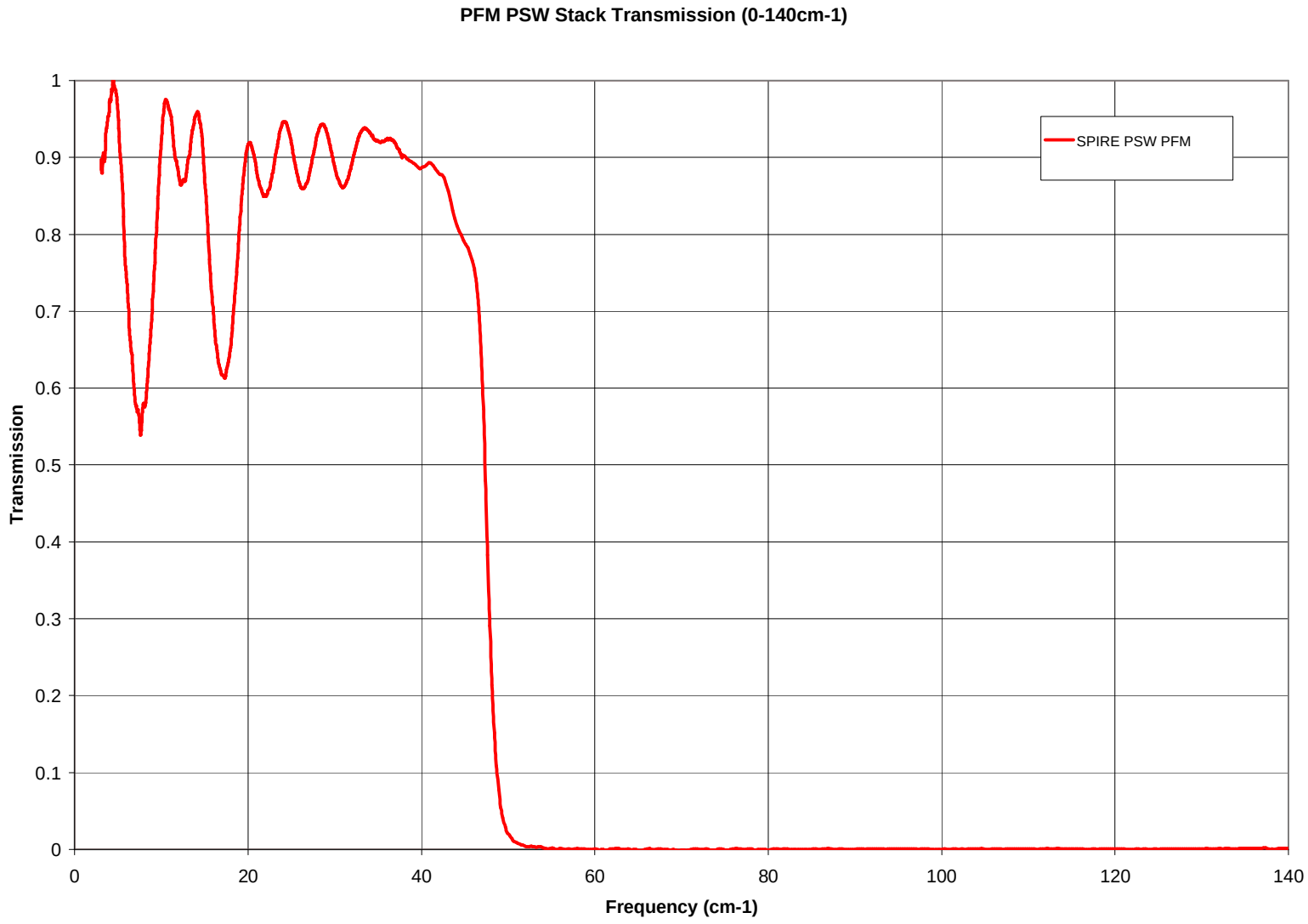

Figure 8 Spectroscopic data for PFM-PSW stack

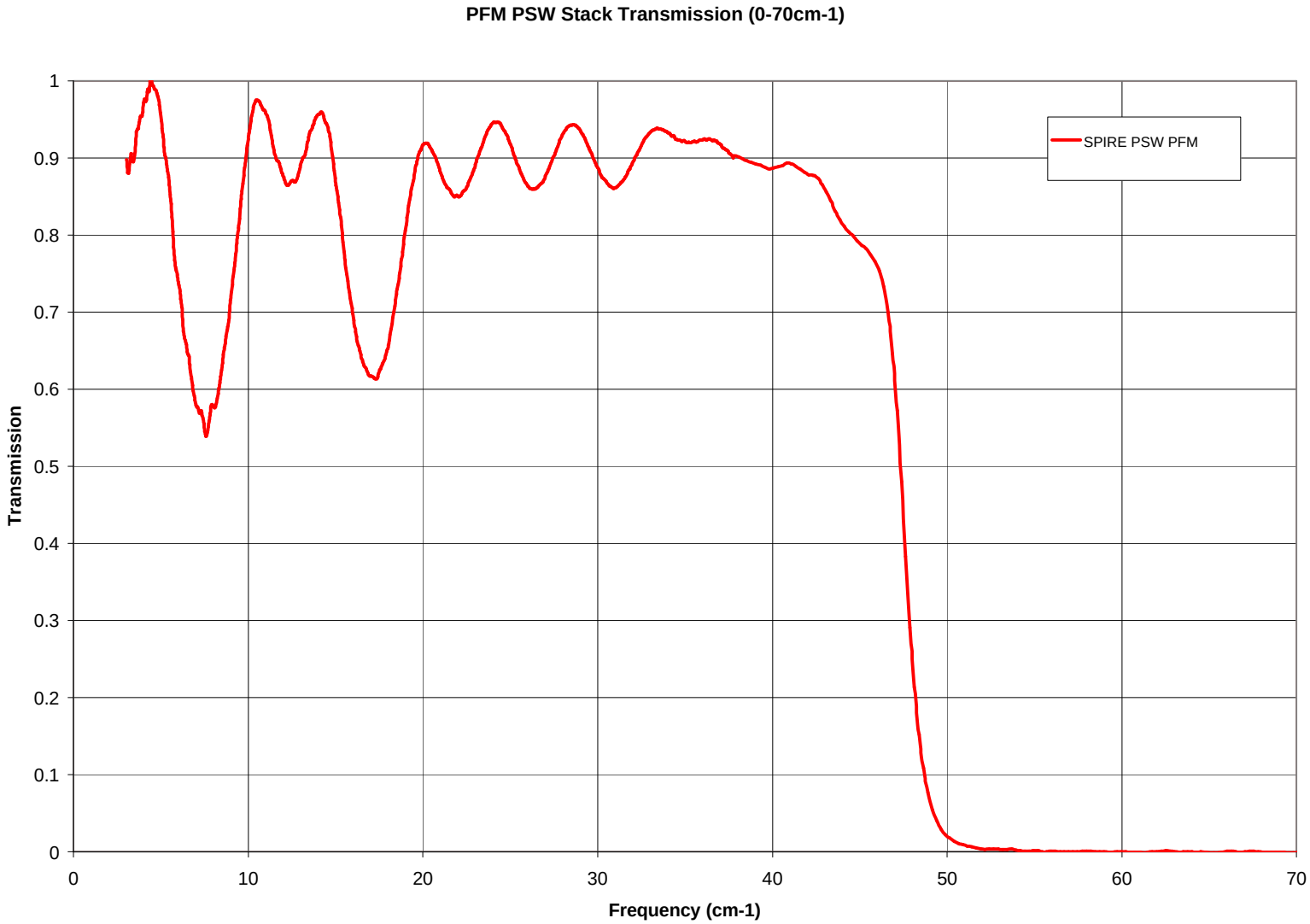

Figure 9 Spectroscopic data for PFM-PSW stack

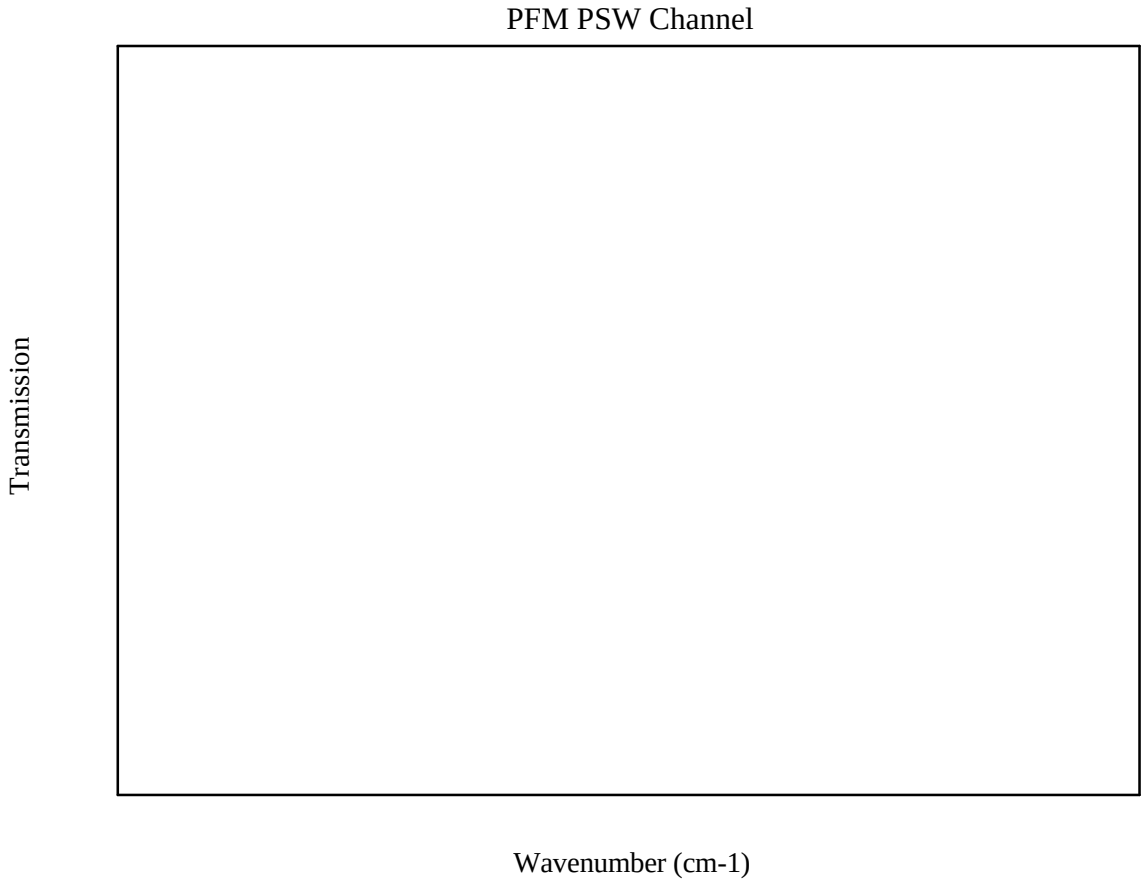

Figure 10 Calculated total PFM PSW channel transmission. These data are calculated from the measured profiles of all flight model filters in the PSW channel.

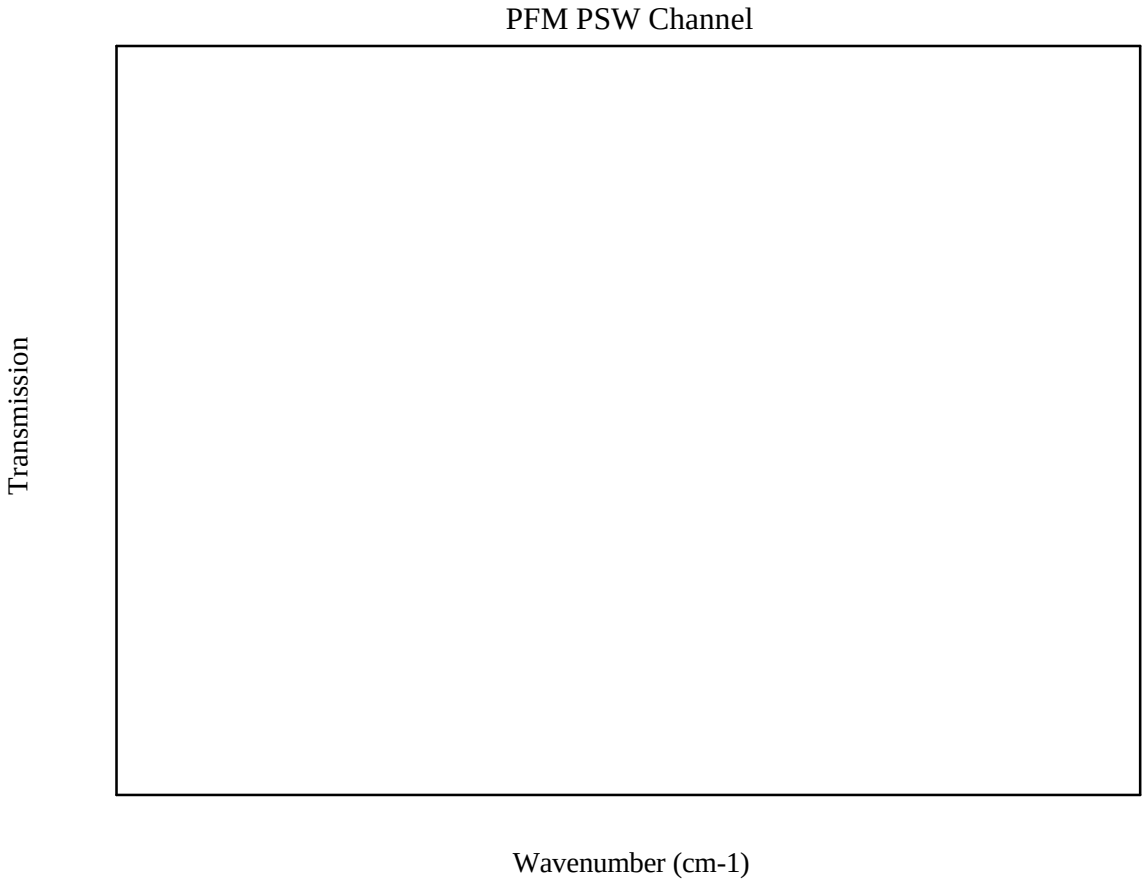

Figure 11 Calculated PSW PFM total channel transmission, showing level of rejection attained out to 600 cm^{-1}.

SECTION 21 - Temporary Installation Record

SECTION 22 - Open Work / Deferred Work / Open Tests

Off-cuts of the filter material will be measured below 15µm using the Bomen spectrometer, once this facility is fully commissioned.

SECTION 23 - List of Non-Conformance Reports

None

SECTION 24 - Copies of Non-Conformance Reports

SECTION 25 - Test Reports

The filter module (PSW assembly and sub-units) underwent the following series of qualification tests:-

a) Post-manufacture spectroscopic measurements – 5-40cm^{-1} and 15-140cm^{-1} of PFIL4S and PFIL5S
b) Post-bonding spectroscopic measurements – 5-40cm^{-1} and 15-140cm^{-1} of PFIL4S and PFIL5S
c) Cutting of PFM and FS filter stacks from same bonded pair substrate.
d) Thermal shocks of the filter material. This consisted of five cycles of:-
    - Plunge filter material at room temperature into bath of liquid nitrogen and leave for 2 minutes
    - Remove filter material from LN_2 and place in oven at 320K for 10 minutes
e) Visual inspection
f) Spectroscopic measurements of mounted assembly at three points over the filter area – 10-145cm^{-1} range
    - Uniformity checks:-
        - The filter assembly was checked for uniformity at three points along the filters long axis - at the centre of the filter, and at two points along the long axis, 16mm either side of the central point.
        - The FTS geometric beam footprint was approximately 7mm diameter.
g) Spectroscopic measurements of bonded filter material – 20-650cm^{-1} range
h) Cleaning and mounting in clamp
i) Spectroscopic measurements in the range 15-140cm^{-1}
j) PFM-PSW assembled stack thermally cycled 300K-77K-300K (3 times)
k) Spectroscopic measurements - 15-140cm^{-1} range
l) Spectroscopic measurements - 5-40cm^{-1} range
m) PFM-PSW stack vacuum baked for 17Hrs at 350K
n) Visual inspection under microscope

Spectroscopic tests – index

Spectroscopic tests were carried out according to standard UWC FTS procedures. Refer to historical record for index.

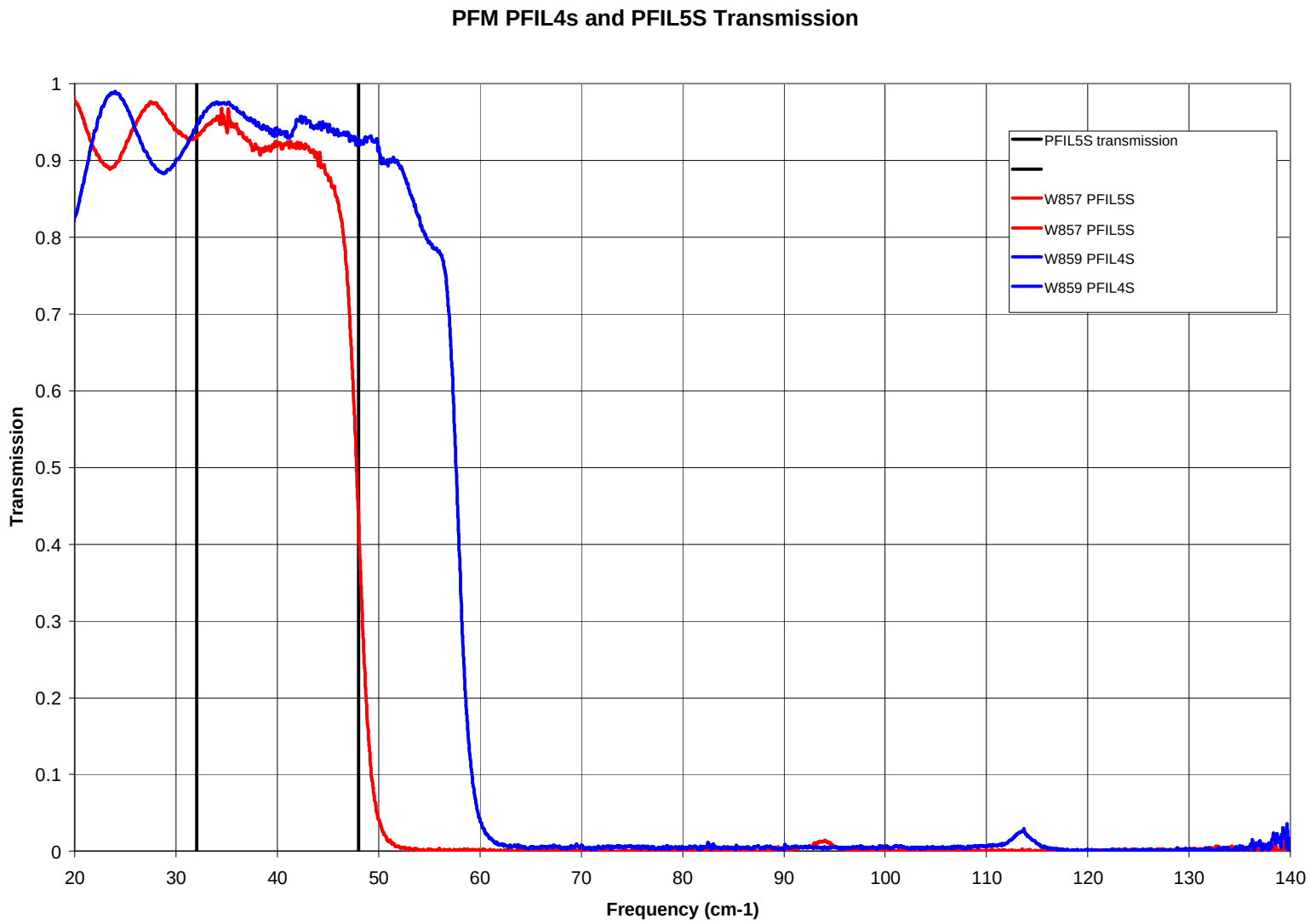

Figure 12 PFM PFIL4S and PFIL5S transmission, prior to bonding and cutting.

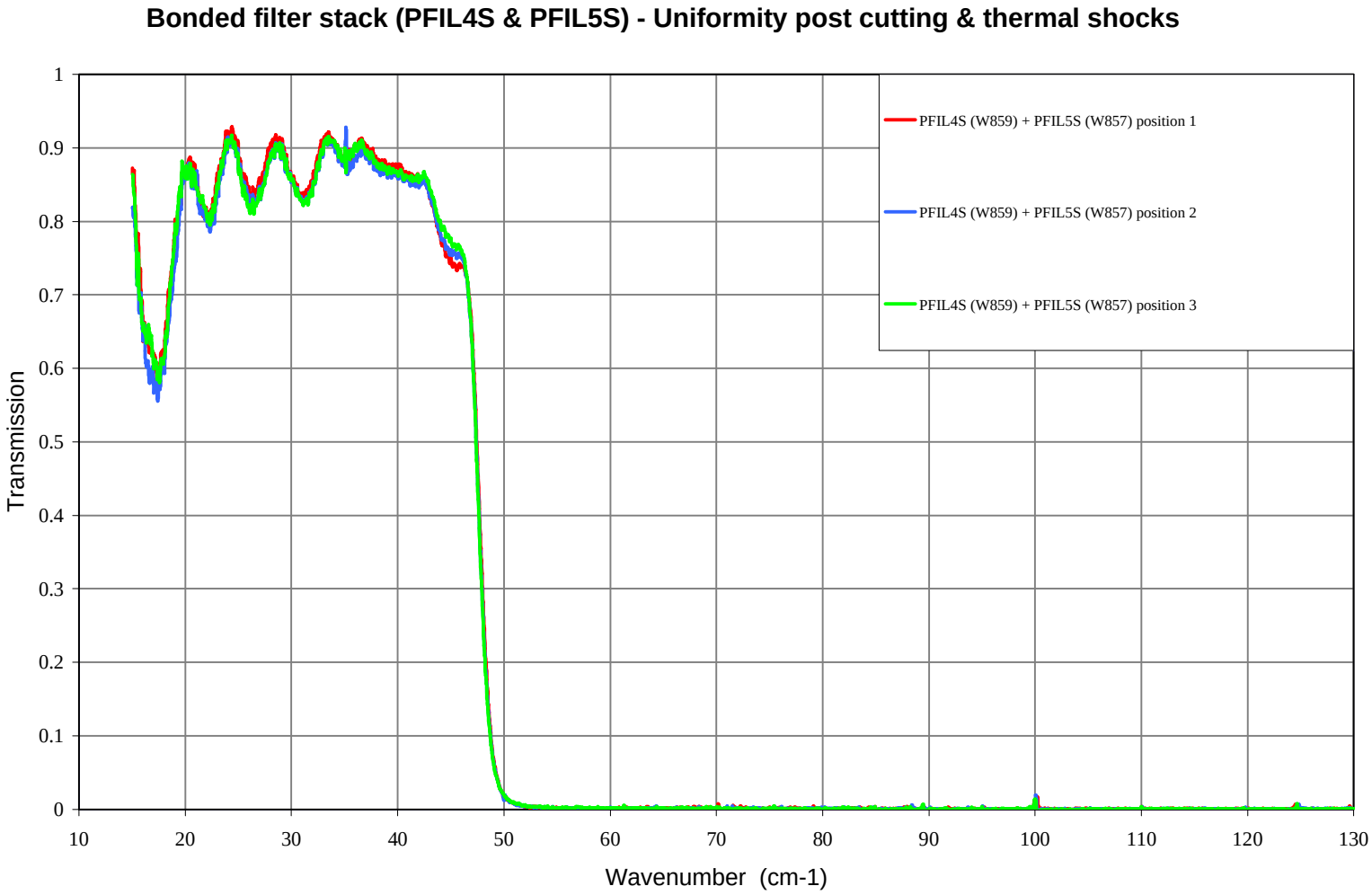

Figure 13 Bonded filter stack - uniformity post-cutting and 5 thermal shock cycles

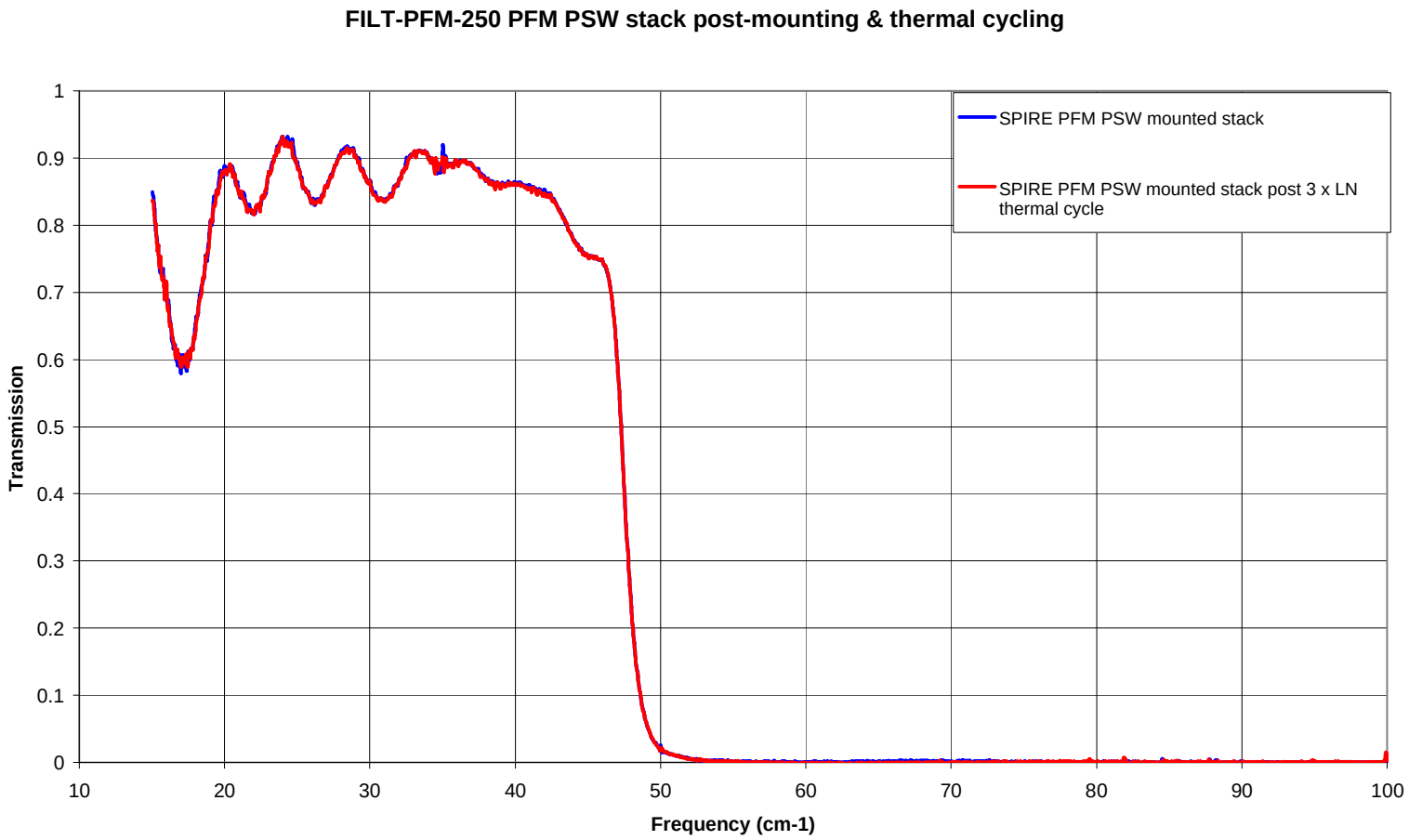

Figure 14 Final PFM PSW 300mK filter assembly, post-mounting, before and after thermal cycles

SECTION 27 - Reference List of EIDP's

Associated

Title (Listed in alphabetical order)	ID (Serial No.)	Acronym	Document No.	Issue	Date
PSW BDA PFM EIDP					

Lower Level

Title (Listed in alphabetical order)	ID (Serial No.)	Acronym	Document No.	Issue	Date

SECTION 28 - Mass Records

Assembly	Final measured mass
FILT-PFM-250 – PFM PSW assembly	8.785g

SECTION 29 - Cleanliness Statement

The manufacture of these filter elements took place within a class 1000 clean-room, following the procedures laid out in the UWC document, “UWC Filter Fabrication Procedures.doc”. Although filter testing took place within a standard laboratory environment, the mounted filters were subsequently cleaned (using acetone and a de-ionised air-gun), in a class 100 laminar flow cabinet, prior to packaging.

Date	Statement	Signature/Signatory
21st May 2004	This item has been cleaned following the procedures laid out in the UWC document, “UWC Filter Fabrication Procedures.doc”	CT

SECTION 30 - Other Useful Information

SECTION 31 - DPL/DML

Refer to the Cardiff SPIRE filters Declared Materials & Parts list (HSO-CDF-LI-018) and the filters Declared Processes List (HSO-CDF-LI-021).

SECTION 32 – List of Appendices/Attachments

Appendix #	Title (Listed in alphabetical order)	Document No.	Issue	Date	Notes