JPL Hardware Requirements Certification Review (HRCR)- Proto-Flight Model (PFM) Spectrometer Short Wavelength (SSW) Bolometer Detector Assembly (BDA)

10209800-5 S/N 009

SPIRE Element
Herschel Space Observatory Project

March 10, 2004

CONTENTS

	SECTION
Hardware Requirements Certification Review (HRCR) Form	**1**
Final Inspection Report (IR)	**2**
Drawing Status Matrix	**3**
Issues / NCR's	**4**
Spectrometer BDA envelope, HR-SP-JPL-ECR-003	
M. Herman 15 May 2003 memo (fasteners for vibe. tests)	
Dark Pixel Issue	
Top Level Assembly Drawings	**5**
Open ECRs	**6**
ECR-SP-JPL-ECR-003 (Spectrometer BDA Envelope Height)	
Waivers	**7**
HR-SP-JPL-RFW-005 (Sine Vibe Omission)	
HR-SP-JPL-RFW-006 (Vibration Test Levels)	
Problem / Failure Reports (PFR)	
This Hardware: (None)	
Similar Hardware: PFR Z81506 (from CQM PLW)	**8**
Handling Documents	**9**
General / Unpacking	
Electronic	
Environmental Requirements Verification Matrix	**10**
Performance Data Matrix	**11**
Qualification Status	**12**
Connector Mate and Operation Logs	**13**
Mechanical & Electrical ICDs	**14**
Other Data	**15**
Detector Backshort Data	
Alignment Measurement Summary	
Feedhorn Data	
300mK Spectrometer Filters EIDP	

RAL EIDP Table Of Contents Vs. HRCR Contents

EIDP Section	EIDP	HRCR Box #	Comments/Notebook Section
1	Shipping Documents		Shipper and Final IR
2	Transportation, Packing, Handling & Integration Procedures	20	Section 9
3	Certificate of Conformance / Delivery Review Board MoM		HRCR form is the CofC
4	As Built Configuration Status List		Dwg List, Section 3
5	List of Waivers	16	Section 7
6	Copies of Waivers	16	Section 7
7	List of Non-Conformance Reports	17, 18	
8	Copies of Non-Conformance Reports	17, 18	
9	Cleanliness Statement	10	Final IR includes inspection for conformance with cleanliness requirement (particulates)
10	Operational Manual	20	
11	Top Level Drawings (inc. Family Tree)	14	Section 5
12	Interface Drawings	26	Section 14
13	Functional, Block & Mechanical Drawings	14	Section 5
14	Electrical Circuit Drawings		See Electrical Handling Doc.
15	Serialized Components List		In the build books – not shipped
16	Mass Properties/ Power Budget		Mass found in header of HRCR
17	Qualification Status List / Test Matrix	22	Qual. Report to be supplied later, Summary in Section 12
18	Test Reports		To be supplied later, Summaries in Sections 10 and 11
19	Open Work / Deferred Work / Open Tests	5	
20	Calibration Data		Section 11
21	Historical Record		Section 13
22	Manufacturing Logbook(s)	--	To be retained at JPL
23	Operating Time / Cycle Record		Section 13
24	Connector Mating Record		Section 13
25	Age Sensitive Items Record		NA for BDA
26	Pressure Vessels – History/Test Record	26	NA
27	Temporary Installation Record		Section 13
28	Reference List of EIDPs (Lower level)		300mK Filter EIDP - Section 15
29	Other Useful Information		Section 15

JPL Hardware Requirements Certification Review – SPIRE Element #D-27955

Assembly/Subsystem	PEM	Phone	Section	Date
SPIRE	Martin Herman	(818) 354-8541	386	10 March, 2004

Drawing/ Part No.	Dwg. Rev.	Nomenclature	Serial No.	Model	Type	Final IR No.	Mass (grams) As Meas. / Req.
10209800-5	A	Bolometer Detector Assembly	009	PFM	SSW	919941	482 g / 510 g

Check applicable answer and give necessary explanation in remarks column	Yes	No	N/A	Remarks	Data Attachments (Package Sec. #)	Signature Approval & Date
1. Are all drawings and specifications complete, approved, released and frozen?		x		**See attached status matrix and note (section3)**	14. Latest Top Assembly Drawings ☒ Attached ☐ None (Sec. 5)	**Cog E**
2. Do the released drawings and specifications reflect all approved changes?	x			**See section 3 matrix for which drawings are released.**	15. List of open ECRs ☒ Attached ☐ None (Sec. 6)	**PEM**
3. Is hardware identical to other hardware delivered? If no, provide difference list.			x	**First hardware of this type delivered**	16. Waivers ☒ Attached ☐ None (Sec. 7)	**QA Engineer**
4 Does the hardware meet the requirement of its functional requirements, specifications, waivers and/or ICDs ? If no, provide difference list.		x		**All Requirements met except as shown in attached verification matrix (section 10) and Issues / NCRs (section 4). See section 11 for detector performance matrix.**	17. Open MRBs ☐ Attached ☒ None (N/A)	**Environments/Reliability**
5. Have all IR discrepancies and MRBs been dispositioned and agreed to by Engineering/ QA ?		x			18. Open P/FRs on this H/W ☐ Attached ☒ None (N/A)	**Configuration Management**
6. Is complete as-built list information included in the build book?	x			**Official Indentured Parts List (IPL) not generated due to drawing status, but traceability information is captured in build books.**	19. Open P/FRs on similar H/W ☒ Attached ☐ None (Sec. 8)	**Mission Assurance Mgr.**
7. Have all required environmental tests & analyses been completed?	x				20. Handling Document ☒ Attached ☐ None (Sec. 9)	**Project**
8. Is all required assembly and/or subsystem level functional testing complete?	x				21. Shortage List ☐ Attached ☒ None (N/A)	**PI**
9. Have all piece parts, processes and materials been approved by JPL?	x				22. Requirements Verification Matrix ☒ Attached ☐ None (Sec. 10)	
10. Does this hardware meet all contamination control requirements?	x				23. Qualification Status ☒ Attached ☐ None (Sec. 12)	
11. Are all required shipping containers, shipping procedures, and special handling procedures ready?	x				24. Connector Mate / Demate Log ☒ Attached ☐ None (Sec. 13)	
12. Is additional work required to bring this hardware to flight readiness?		x			25. Operation Log ☒ Attached ☐ None (Sec. 13)	
13. Is this hardware acceptable for flight ?	x				26. ICDs ☒ Attached ☐ None (Sec. 14)	

*** INSPECTION REPORT ***
Printed Copies are for Reference Only - Please check with PDMS for official version

IR Number
919941

Action
BROWSE

Status "IR & IRDI Initiated"

IR Instructions

REFERS TO:

Part Number	Dash Number	Revision	Latest Rev	Serial Number	Quantity
10209800-5	(with part number)	A	X8	009	1

Nomenclature:	**BOLOMETER DETECTOR ARRAY**		
Prgm/Project:	**HSO-PLANCK**	Inspection Date:	**07-OCT-2003**
COGE:	**WEILERT, MARK A.**	ECO/ECI:	
QAE:	**HUGHES, SCOTT P.**	Reference Designator:	**SPIRE**
JPL/Mfr:	**JPL**	Lot No.:	
Type of Inspection:	**Dimensional**	Insp. Std / Spec No.:	
Type of Item:	**Flight**	AIDS No.:	
Location:	**JPL**	Work Order No.:	
Manufacturer:		CAGE Code:	
Supplier:		Receipt No.:	
Parts received by:		Property / ID:	
Received date:		PO/CT No.:	
Qty Accepted:		Line No.:	
Qty Rejected:	**0**	Rel / Mod No.:	
QA Alert?		CAN Required?	
IMTE Code:	**None**	IMTE Number:	
IMTE Code No. 2:	**None**	IMTE Number No. 2:	
IMTE Code No. 3:	**None**	IMTE Number No. 3:	
IMTE Code No. 4:	**None**	IMTE Number No. 4:	
Orig Nomenclature:			

DISCREPANT ITEMS:

Item	Discrep Code	Qty	Zone	S/N	Description	Re-Work	Files

This IR has No Discrepant Items

Item	Disposition	Root Cause Code	Dispo Code	Disp. Appr.	Stamp Date

This IR has No Discrepant Items

Inspection Report Notes:

Please type no more than 10 lines.

	Initiated by	Signed by COGE	Signed by QAE	Closed by
Number of Files Attached **0**	Date	Date	Date	Date

Reserved by	Reserved on	Reason

Drawing Release Status Matrix

Many drawings are not yet released due to prior funding contraints,
All unreleased drawings exist in pre-release or redline forms,
which have not yet been incorporated into released versions.
Incorporation of changes and release process is started.

= unreleased
= unreleased, but captured in MDL design documents
= in signature cycle

Part #	Nomenclature
10209800	Bolometer Detector Assembly
FILT-PFM-220	SSW 300mK Filter Assembly (Cardiff)
10209805	Light Can
10209807	Light Seal
10209850	SSW Detector Assembly
10209817	Thermal Strap
10209819	Connector Mount
10209826	Coverplate
10209827	Spring Stop
10209828	Detector Clip
10209835	Center Kapton Cable Assembly
10209834	Center Kapton Cable
10209849	Spacer
10209837	Threaded Shoulder Pin
10209838	Load Resistor
10209851	SSW Bolometer Array
10209852	SSW Backshort Array
10209853	SSW Feed Horn
10209854	Cable Clamp
10217668	Spring Stop 2
10217701	Tefon Washer
10209860-1	Suspension Assembly (-1)
10209845	Spacer Pulley
10209859-1/B	Capstan-3
10209861-1	Spacer
10209862-1	Capstan-1
10209870-1	Top Ring Assembly (-1)
10209871-1/A	Top Ring (-1)
10209874-1/C	Pulley
10209887-1	Pulley Shaft (-1)
10209888-1	Pulley Lock
10209872-1	No Lips Pulley
10209880-1/A	Bottom Ring Assembly
10209874-1/C	Pulley
10209881-1	Bottom Ring
10209882-2	Pin, 11 mm long
10209882-3	Pin, 5.5 mm long
10209883-2	Stud, 1.6mm (-2)
10209887-2	Pulley Shaft (-2)

Part #	Nomenclature
10209888-1	Pulley Lock
10209885-1	Latch
10209886-1	Capstan Clamp
10209898-1	Bushing
10209890-1/A	Middle Ring Assembly
10209858-1	Modified Screw
10209874-1/C	Pulley
10209882-1	Pin, 12.4mm long
10209882-4	Pin, 5.5 mm long, 1mm dia.
10209883-1	Stud, 1.6mm (-1)
10209884-1	Prawl
10209887-1	Pulley Shaft (-1)
10209887-3	Pulley Shaft (-3)
10209888-1	Pulley Lock
10209891-1	Ring-A
10209892-1	Ring-B
10209893-1	Vespel Spacer
10209894-1	Flexure
10209895-1	Sleeve
10209896-1	Aluminum Spacer

Issues / NCR's
PFM SSW BDA S/N 009

Configuration / Processing:

- The maximum height of 300 mK stage exceeds ICD drawing 10209721 allowed range by 1.0 mm due to changes in 300 mK filter stack thickness which were not incorporated into the drawing. See attached open ECR: HR-SP-JPL-ECR-003.

Environmental:

- Shake tests were performed with non-flight-like 8-32 mounting screws, instead of 6-32. See attached email regarding this issue: (M. Herman, 15 May 2003) -- *This same issue applied to the previous CQM-PLW and PFM-SLW BDAs.*

- Shake tests were performed in accordance with open waivers HR-SP-JPL-RFW-005 (Sine Vibration Omission) and HR-SP-JPL-RFW-006 (Vibration Test Levels). See Waiver List (section 7).

Performance:

- The diagnostic "dark" detector pixels are sensitive to stray light incident from the sides of the BDA. This stray light problem does not significantly affect the optical pixels. See attached description. Note that there is no requirement for the dark pixels, which are included for diagnostic purposes only. *Note that this same issue applied to the previous PFM-SLW BDA.*

CCLRC Rutherford Appleton Laboratory	DOCUMENT / ENGINEERING CHANGE REQUEST (ECR)	PRODUCT ASSURANCE Space Science and Technology Department

DCR / ECR Number:	HR-SP-JPL-ECR-003

Spacecraft / Project	**HERSCHEL**	**Originator's Name**	Martin Herman	
System / Experiment / Model	**SPIRE /**	**Signature**		
Sub-System		**Date**	November 20,2003	
Assembly		**Classification**	**Urgent**	**Routine**
Sub-Assembly		**Ref. Doc. / Drwg No.**	JPL dwg 10209721	
Item	Bolometer Detector Assembly (BDA)	**Reference**		

ECR/DCR Title	**Spectrometer BDA Envelope Height**

ECR Description

On the ICD Drawing 10209721 sheet 2, zone H4, the current maximum height dimension is 42.5 mm from the BDA mounting plate. This dimension needs to be changed to 43.6 to encompass the two spectrometer BDA types, SLW and SSW. Photometer BDA types do not require this change. The current dimension will be replaced with a note giving the two BDA type dependent values. The allowed 300mK stage shift given in note 9 will remain.

Need / Justification For Change

The Spectrometer BDA (types SLW and SSW) 300mK filter stacks were at some point increased in thickness due to the addition of a lens. This change was not flowed down into the BDA ICD. The SLW BDA S/N008 maximum height was measured at 44.04 mm from the mounting plate, which is 1.04 mm higher than the current allowed ICD range. The nominal 42.5 mm height plus the 0.5mm allowed displacement of the 300mK stage (see ICD note 9) gives the current 43.0 mm max height.

Affected Items / Work package (Title, Number, Issue, Para)

ICD drawing 10209721 rev B

Related Factors (Highlight as applicable)

Spacecraft	Performance	Power	Others (Specify)
Ground Segment	Elect. Interfaces	Weight	
Launch Vehicle	Mech. Interfaces	Schedule	
Payload	Test/Verification	Cost	

Attachments	Distribution

Change Approved Project		**Change Approved Customer**	
Project Closure		**Customer Closure**	

Date: Mon, 11 Aug 2003 16:34:04 -0700
From: Martin Herman <Martin.I.Herman@jpl.nasa.gov>
Subject: Waiver Request (vibration fastners)
X-Sender: miherman@pop.jpl.nasa.gov
To: Mark.A.Weilert@jpl.nasa.gov
Cc: Henry.Abakians@jpl.nasa.gov

Date: Thu, 15 May 2003 11:41:18 -0700
To: Matt Griffin <Matt.Griffin@astro.cf.ac.uk>, Eric Sawyer <e.c.sawyer@rl.ac.uk>, Chris Brockley-Blatt <cbb@mssl.ucl.ac.uk>, Berend Winter <bw@mssl.ucl.ac.uk>
From: Martin Herman <Martin.I.Herman@jpl.nasa.gov>
Subject: Waiver Request (vibration fastners)
Cc: Ben.A.Parvin@jpl.nasa.gov, Jamie Bock <jjb@astro.caltech.edu>, Gary Parks <Gary.S.Parks@jpl.nasa.gov>, kalyani@squid.jpl.nasa.gov
Bcc:
X-Attachments:

Dear Matt and SPIRE Team,

To refresh everyone's memory. We requested the following information:

What type of fasteners will be used in Europe to mount the BDA? In our ICD, 6-32 fasteners are called for. However, the current test hardware uses 8-32 fasteners. We are looking to be consistent with the flight implementation.

The answer (Thanks Chris) was 6-32. Our current test fixture uses 8-32 and we are getting ready for vibration testing of the CQM next week. Therefore, we had a mechanical engineer look into this issue. His (Paul MacNeal) response was:

> It will acceptable to use four #8-32 fasteners for the vibration tests at JPL. The reasons are....
>
> 1) The test fixture has already been built using #8-32 tapped holes,
> 2) The use of #6-32 fasteners torqued to full value should be able to resist over 200 G's of lateral force before allowing slippage, and therefore is not a critical component of the vibration test, and
> 3) The test is primarily performed to verify integrity of the flexures, braid, and other components, and not the interface fasteners.

Based on this information, we are requesting a waiver for the CQM PLW vibration and for future QM, CQM, PFM and FS tests. The change for future test is small, but the fiscal situation is extremely challenging and no technical risk to the program is evident with the existing approach.

Thanks,
Marty

Dark Pixel Issue

DESCRIPTION OF PROBLEM:

The dark detector pixels, if properly sealed, should exhibit insignificant response if light is shined on the detector/feedhorn assembly. Our optical tests with the SSW BDA reveal that the dark detectors, pixel id's DP1 and DP2, in fact absorb a significant amount of stray light. The dark channels are designed for diagnostic purposes only and does not have any impact on the BDA performance. Note that testing shows that not more than 5% of the signal from the optical pixels is due to the stray light.

FINDING:

Upon careful review of the BDA assembly, we found the following: the SSW feedhorn assembly consists of a hexagon structure of 19 feedhorns which are attached to a circular mounting flange. This hexagon feedhorn structure extends beyond the bottom flat face of the mounting flange. The extension is needed in order to provide proper optical coupling between the feedhorn and the detector and to protect the optical pixels from stray light. The two dark channels and the two thermistors are outside the perimeter of this hexagon structure and therefore susceptible to stray light which enters from the side of the mounting flange. We believe the optical response by the dark channel is due to this arrangement.

REVISIONS													
LTR	ZONE	DESCRIPTION		DWN	CHK	STRUCT	MATL	THRM CONT			ENGR	DSGN SUPV	DATA MGT	RELEASE DATE
A		INITIAL RELEASE	CODE B	SEE TITLE BLOCK										

14. ALTERNATE OR EQUIVALENT ITEMS MAY BE USED FOR THIS ITEM WITH PRIOR ENGINEERING APPROVAL.

13. SEAL SHIPPING CONTAINER USING ITEMS 28, LID, 30, SCREWS, 31, O-RING, AND ITEM 32, PLUG. TORQUE ITEM 30, SCREWS TO 1.9 N*M PLUS RUNNING TORQUE PER JPL SPEC ES517040. TORQUE ITEM 32, PLUG TO 7.3 N*M PLUS RUNNING TORQUE PER JPL SPEC ES517040.

12. SECURE FLEXURE RING OF ITEM 1 OR 2, TO ITEM 26, USING ITEM 29, NUTS. TIGHTEN NUTS HALF TURN PAST FINGER TIGHT.

11. INSTALL ITEMS 26, MOUNT, INTO ITEM 27, SHIPPING BASE. TORQUE TO 200 N*MM PLUS RUNNING TORQUE PER JPL SPEC ES517040.

10. FOR -7 CONFIGURATION, SECURE ITEM 39, UNION NUT, TO ITEM 35, MASS SIMULATOR USING ITEM 40, SET SCREW, AND ITEM 25 ADHESIVE. TORQUE TO 1.7-2.2 N*M PER JPL SPEC ES517040. SECURE ITEM 33, ACCELEROMETER, TO ITEM 39, UNION NUT AND TORQUE TO 1.7-2.2 N*M PER JPL SPEC ES517040.

9. FOR -6, -7 AND -9 CONFIGURATION, SECURE ITEM 10, OR 36, ACCELEROMETER MOUNT, OR ITEM 43, ACCELEROMETER SIMULATOR, TO ITEM 9 OR 35, MASS SIMULATOR USING ITEM 22, SCREW. TORQUE TO 200 N*MM PLUS RUNNING TORQUE PER JPL SPEC ES517040.

8. FOR -7 CONFIGURATION, SECURE ITEM 33, ACCELEROMETER, TO ITEM 36, ACCELEROMETER MOUNT. TORQUE ITEM 33, ACCELEROMETER, TO 1.7-2.2 N*M PER JPL SPEC ES517040. CONNECT ITEM 34, CABLE, TO ITEM 33, ACCELEROMETER.

7. FOR -6 CONFIGURATION, BOND ITEM 37, ACCELEROMETER, TO ITEM 10, ACCELEROMETER MOUNT, USING ITEM 25, EPOXY.

6. FOR ALL CONFIGURATIONS EXCEPT -6, -7, AND -9, INSTALL ITEM 17, SCREW, INTO ITEM 11 OR 49, CAN. TORQUE TO 425 N*MM PER JPL SPEC ES517040.

5. FOR ALL CONFIGURATIONS EXCEPT -6 AND -7, SECURE ITEM 11, 42, OR 49, CAN AND ITEM 45, LIGHT SEAL TO FLEXURE RING OF ITEM 1 OR 2, USING ITEM 24, SCREW, AND ITEM 21, SPRING WASHER. TORQUE TO 200 N*MM PER JPL SPEC ES517040.

4. FOR ALL CONFIGURATIONS EXCEPT -6, -7, -8, AND -9, SECURE ITEM 12, 13, 14, 15, OR 16, FILTER, TO ITEM 1 OR 2, USING ITEM 23 OR 48, SCREW, ITEM 19, NUT, AND ITEM 21, SPRING WASHER. TORQUE TO 200 N*MM PER JPL SPEC ES517040.

3. FOR ALL CONFIGURATIONS EXCEPT -6, -7, AND -9, BEND THERMAL STRAP ON ITEM 3, 4, 5, 6, 7, OR 8 AND FASTEN TO ITEM 1 OR 2. FOR -9 CONFIGURATION SECURE ITEM 44, THERMAL STRAP SIMULATOR IN PLACE OF THERMAL STRAP. USE ITEM 22, SCREW, AND ITEM 46, WASHER AND TORQUE TO 100 N*MM FOR TEMPORARY INSTALLATION ONLY.

2. SECURE ITEM 3, 4, 5, 6, 7, 8, 9, OR 35, TO ITEM 1 OR 2 USING ITEM 19, NUT. FOR ALL CONFIGURATIONS EXCEPT -6 AND -7, SECURE CONNECTOR BRACKET OF ITEM 3, 4, 5, 6, 7, 8, OR 41 TO FLEXURE RING OF ITEM 1 OR 2, USING ITEM 18, SCREW, AND ITEM 21, SPRING WASHER. TORQUE TO 200 N*MM PER JPL SPEC ES517040. SPOT BOND ITEM 19, NUT USING ITEM 25, EPOXY ON ALL CONFIGURATIONS EXCEPT -6 AND -7.

1. FOR CONFIGURATIONS -7 AND -9, SECURE ITEM 33, ACCELEROMETER, TO ITEM 35, MASS SIMULATOR, ROTATING CONNECTOR TO ALLOW CABLE TO EXIT TOWARD TOP OF MASS SIMULATOR. TORQUE ITEM 38, SET SCREW, AGAINST ITEM 33, ACCELEROMETER, TO 1.7-2.2 N*M PER JPL SPEC ES517040. CONNECT ITEM 34, CABLE, TO ITEM 33, ACCELEROMETER.

NOTES: UNLESS OTHERWISE SPECIFIED

16. FOR -2 AND -3 CONFIGURATIONS, SECURE CONNECTOR BRACKETS OF ITEM 5 OR 6, TO ITEM 49, CAN, USING ITEM 50, SCREW. TORQUE TO 180 N*MM PER JPL SPEC ES517040.

15. FOR CONFIGURATIONS EXCEPT -6, -7, AND -9, MARK AS SHOWN WITH ITEM 47, EPOXY INK, USE APPROPRIATE DASH NO., S/N, MODEL (CQM/PFM) AND TYPE (P/LW, S/LW, ETC.).

-9	-8	-7	-6	-5	-4	-3	-2	-1	ITEM NO	REF DES	CAGE NO	PART OR IDENTIFYING NO	NOMENCLATURE OR DESCRIPTION	SPECIFICATION	MATERIAL OR NOTE	ZONE
						4	4		50			NA0070-016004	SCREW, MACHINE PAN HEAD	NA0068	A-286 CRES	
						1	1		49			10209805-2	CAN, LIGHT			
				6	6				48			NA0068A016012	SCREW, MACHINE PAN HEAD	NA0068	A-286 CRES	
	AR			AR	AR	AR	AR	AR	47				EPOXY INK, BLACK			
	2			2	2	2	2	2	46			ST12259-020	WASHER, COUNTERSUNK, LUBRICATED	ST12259	A-286 CRES	
	1			1	1	1	1	1	45			10209807-1	SEAL, LIGHT			
1									44			10209847-1	SIMULATOR, THERMAL STRAP			
1									43			10209744-1	MASS SIMULATOR, ACCELEROMETER			
1									42			10217688-1	CAN, LIGHT, STM			
1									41			10217680-1	DUMMY BOLOMETER			
		1							40		OE328	92313A829	SET SCREW, 10-32 UNF X 1/2"		MCMASTER CARR 14	
		1							39		OE328	90977A021	UNION NUT, 10-32 UNF		MCMASTER CARR 14	
1		1							38		OE328	92313A824	SET SCREW, 10-32 UNF X 3/16"		MCMASTER CARR 14	
			1						37				ACCELEROMETER, THREE AXIS			
		1							36			10209746-2	MOUNT, ACCELEROMETER			
1		1							35			10209745-2	MASS SIMULATOR			
1		3							34			6011 A10	CABLE, ACCELEROMETER		DYTRAN	
1		3							33			3031 B5	ACCELEROMETER, SINGLE AXIS		DYTRAN	
1	1	1	1	1	1	1	1	1	32		SE027	2 P50N	PLUG, O-RING		PARKER FLUID CONNECTORS 14	
1	1	1	1	1	1	1	1	1	31		OE328	9262K331	O-RING, 114.5mm ID X 3mm WIDTH		MCMASTER CARR 14	
8	8	8	8	8	8	8	8	8	30			MS5197-50	SCREW, #8-32 UNC X 1.25"	MS5197	14	
4	4	4	4	4	4	4	4	4	29			NA0034C040	NUT, SELF LOCKING, HEX EXTENDED WASHER, 1100 MPa	NA0034	A-286 CRES 14	
1	1	1	1	1	1	1	1	1	28			10209809-1	CONTAINER, SHIPPING, LID			
1	1	1	1	1	1	1	1	1	27			10209808-1	CONTAINER, SHIPPING, BASE			
4	4	4	4	4	4	4	4	4	26		OE328	9217K32	MOUNT, NATURAL RUBBER, SANDWICH, M4 X 0.7		MCMASTER CARR 14	
AR	AR	AR	AR	AR	AR	AR	AR	AR	25			EC 2216 A/B	EPOXY			
4				4	4	4	4	4	24			NA0069-016010	SCREW, CAP, SOCKET HEAD. FULL THREAD, 1100 MPa	NA0069	A-286 CRES	
						6	6	6	23			NA0068A016010	SCREW, MACHINE PAN HEAD	NA0068	A-286 CRES	
6	2	4	4	2	2	2	2	2	22			NA0069-020010	SCREW, CAP, SOCKET HEAD. FULL THREAD, 1100 MPa	NA0069	A-286 CRES	
20	20			20	20	20	20	20	21			B0187-010-S	BELLEVILLE SPRING WASHER			
									20							
4	4	4	4	6	6	6	6	6	19			934-A2 M1.6 X 0.35	NUT	DIN 934	A-286 CRES	
4	4			4	4	4	4	4	18			NA0069-016004	SCREW, CAP, SOCKET HEAD. FULL THREAD, 1100 MPa	NA0069	A-286 CRES	
	2			2	2	2	2	2	17			NA0069-040008	SCREW, CAP, SOCKET HEAD. FULL THREAD, 1100 MPa	NA0069	A-286 CRES	
				1					16			S/SW FILTER	S/SW FILTER			
					1				15			S/LW FILTER	S/LW FILTER			
						1			14			P/SW FILTER	P/SW FILTER			
							1		13			P/MW FILTER	P/MW FILTER			
								1	12			P/LW FILTER	P/LW FILTER			
	1			1	1			1	11			10209805-1	CAN, LIGHT			
			1						10			10209746-1	MOUNT, ACCELEROMETER			
			1						9			10209745-1	MASS SIMULATOR			
				1					8			10209850-1	DETECTOR ASSEMBLY, SPECTROMETER SHORT WAVE			
					1				7			10209840-1	DETECTOR ASSEMBLY, SPECTROMETER LONG WAVE			
						1			6			10209830-1	DETECTOR ASSEMBLY, PHOTOMETER SHORT WAVE			
							1		5			10209820-1	DETECTOR ASSEMBLY, PHOTOMETER MEDIUM WAVE			
	1								4			10209810-2	DETECTOR ASSEMBLY, PHOTOMETER LONG WAVE SIMULATOR			
								1	3			10209810-1	DETECTOR ASSEMBLY, PHOTOMETER LONG WAVE			
								1	2			10209860-2	SUSPENSION ASSEMBLY			
1	1	1	1	1	1	1	1		1			10209860-1	SUSPENSION ASSEMBLY			

QTY REQD

PARTS LIST

MATERIAL

METRIC

THIRD ANGLE PROJECTION

NEXT ASSEMBLY	USED ON
	SPIRE

APPLICATION

UNLESS OTHERWISE SPECIFIED
DIMENSIONS ARE IN MILLIMETERS
LINEAR TOLERANCES:

0-6	± 0.1
OVER 6-30	± 0.2
OVER 30-120	± 0.3
OVER 120-315	± 0.5
OVER 315-1000	± 0.8
OVER 1000	± 1.2

ANGULAR TOLERANCES: ± 0.5°

MACHINE FINISH (MICROMETERS) 3.2

DO NOT SCALE DRAWING
INTERPRET DWG PER ANSI Y14.100M

CONTRACT NO 1244858

APPD		DATE
DWN	D. CRUMB	6/14/02
CHK		
STRUCT		
MATL		
THRM CONT		
ENGR		
DSGN SUPV		

JET PROPULSION LABORATORY
CALIFORNIA INSTITUTE OF TECHNOLOGY
PASADENA, CA 91109

RELEASED THROUGH EDMG

BOLOMETER DETECTOR ASSEMBLY

SIZE	CAGE NO		REV
A1	23835	10209800	A
SCALE NONE		UNCLASSIFIED	SHEET 1 OF 4

A1 10209800

AutoCAD GENERATED

REV 2/00

Released on MAR-15-2004 by Richard G Bannister and signed by Richard S Mcnabb CHK, Paul D Macneal STRU, Michael D Knopp MATL, Dustin J Crumb DEGN, Mark A Weilert COGE, Richard G Bannister

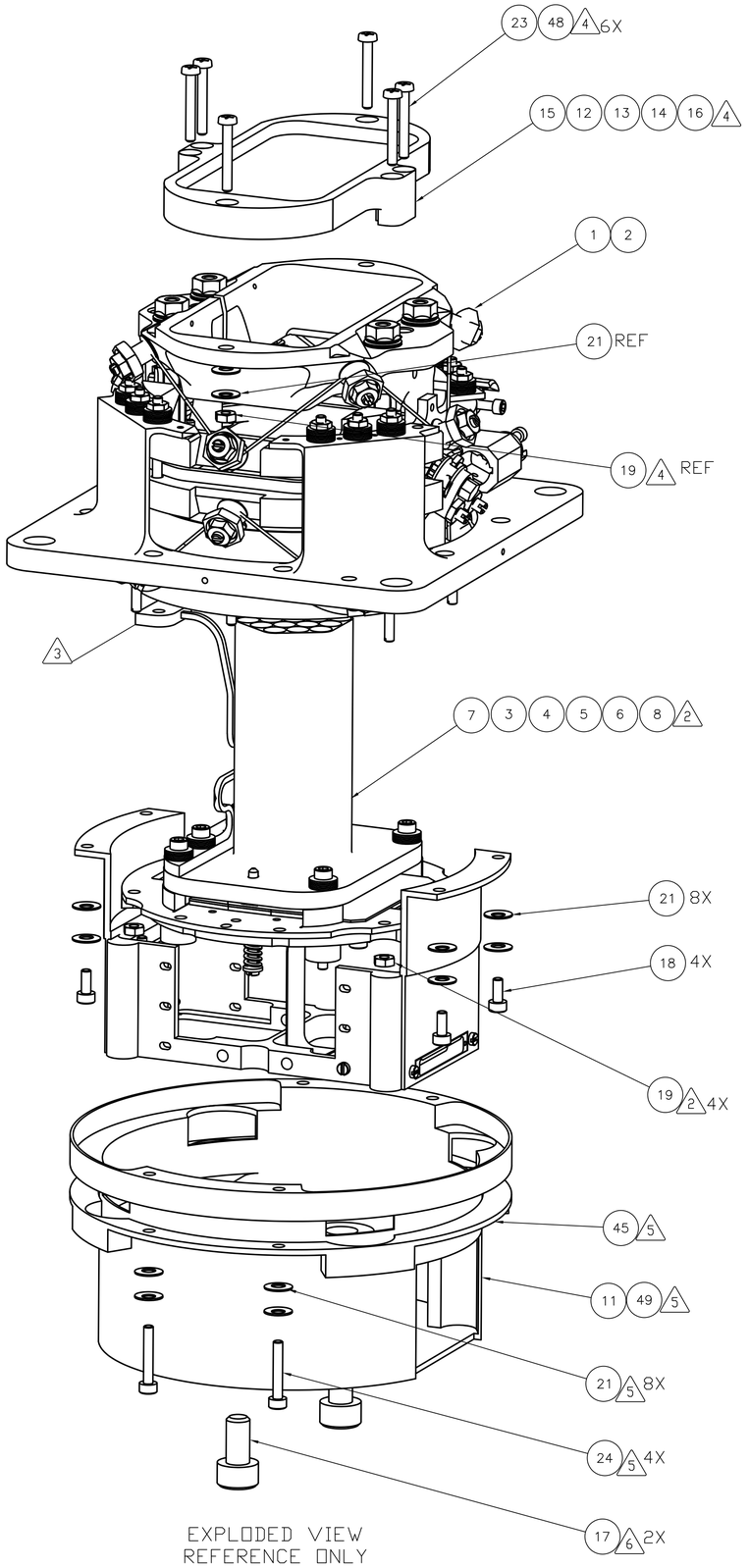

EXPLODED VIEW
REFERENCE ONLY
-4 CONFIGURATION SHOWN
-1, -2, -3, -5 CONFIGURATIONS ARE SIMILAR
-8 CONFIGURATION SIMILAR WITHOUT FILTER

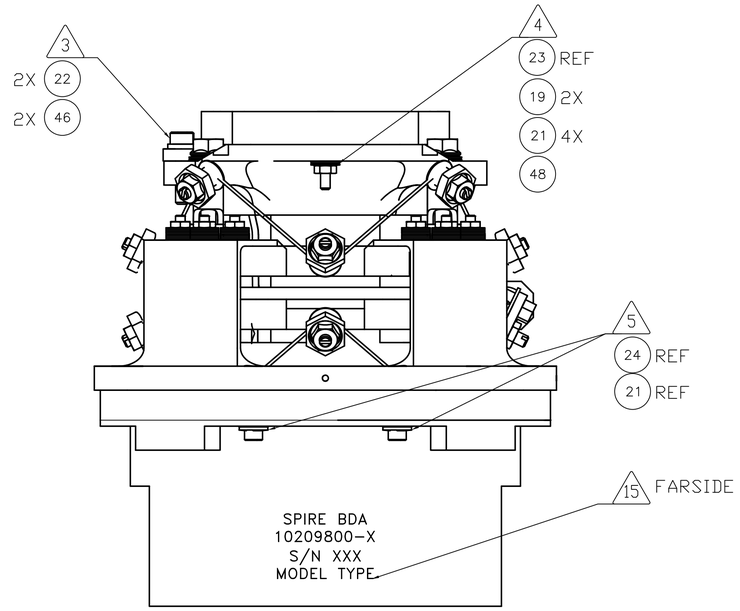

-4 CONFIGURATION SHOWN
-1, -2, -3, -5 CONFIGURATIONS ARE SIMILAR
-8 CONFIGURATION SIMILAR WITHOUT FILTER

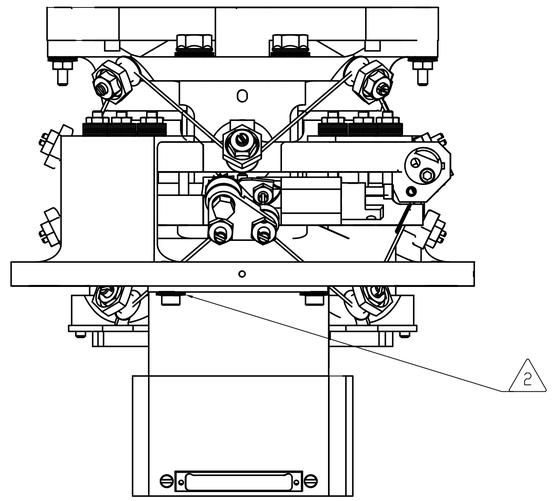

COMPONENTS REMOVED FOR CLARITY
-4 CONFIGURATION SHOWN
-1, -2, -3, -5 CONFIGURATIONS ARE SIMILAR
-8 CONFIGURATION SIMILAR WITHOUT FILTER

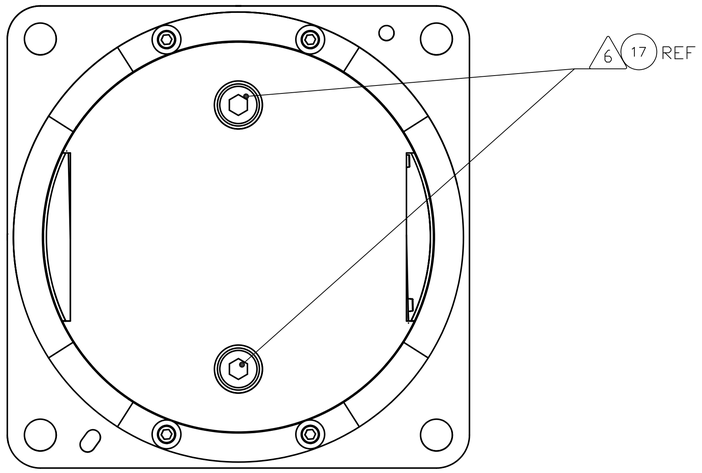

-4 CONFIGURATION SHOWN
-1 AND -5 CONFIGURATIONS ARE SIMILAR
-8 CONFIGURATION SIMILAR WITHOUT FILTER

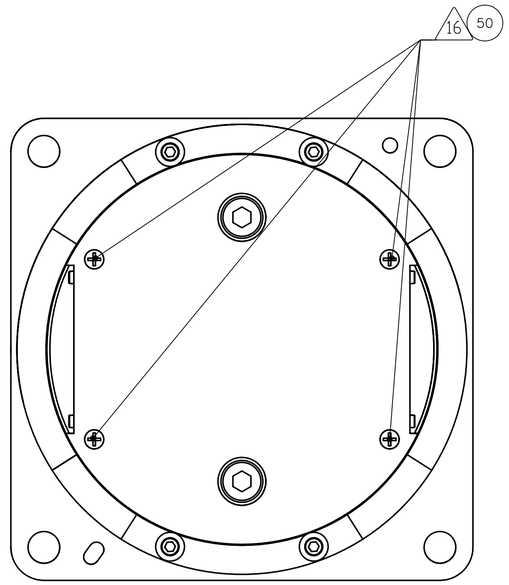

-2 CONFIGURATION SHOWN
-3 CONFIGURATION IS SIMILAR

SIZE	CAGE NO		REV
A1	23835	10209800	A
SCALE NONE	UNCLASSIFIED	SHEET 2 OF 4	

10209800

AutoCAD GENERATED

REV 2/00

Released on MAR-15-2004 by Richard G Bannister and signed by Richard S Mcnabb CHK, Paul D Macneal STRU, Michael D Knopp MATL, Dustin J Crumb DEGN, Mark A Weilert COGE, Richard G Bannister

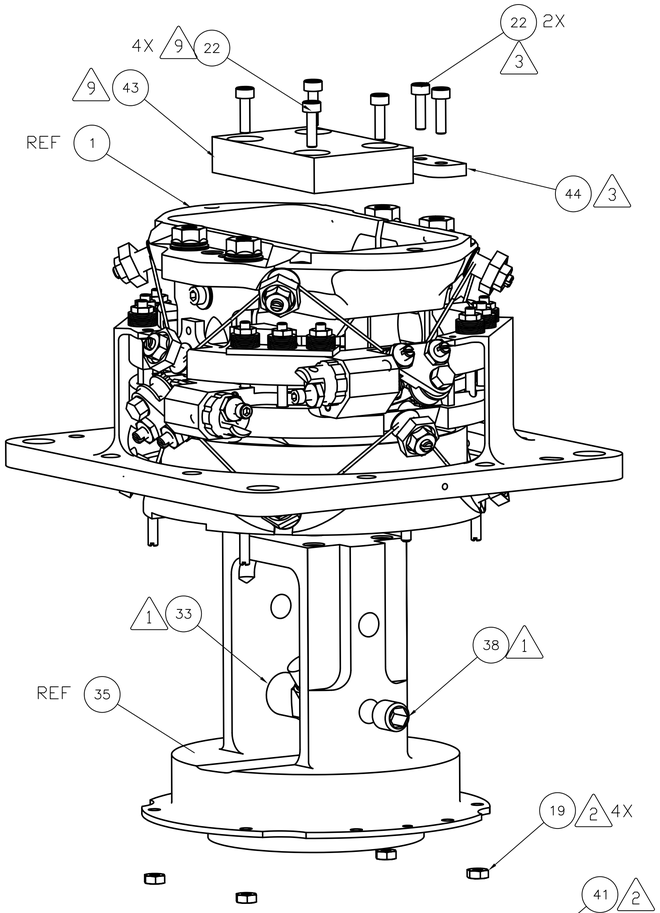

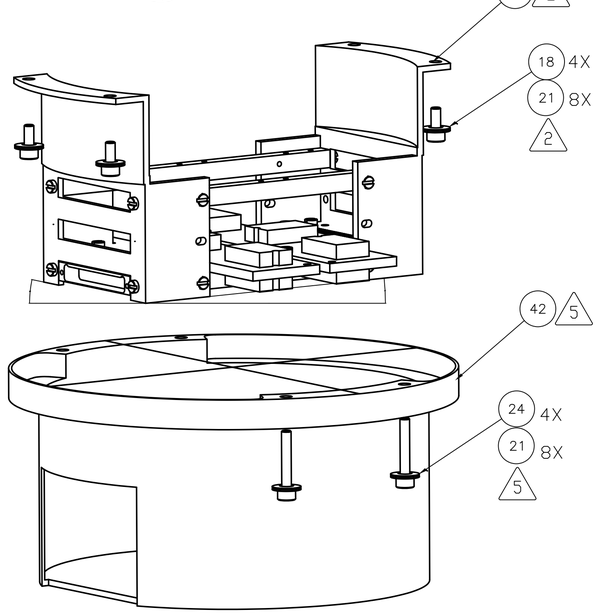

GENERAL VIEW
REFERENCE ONLY
SCALE: NONE
-9 CONFIGURATION,

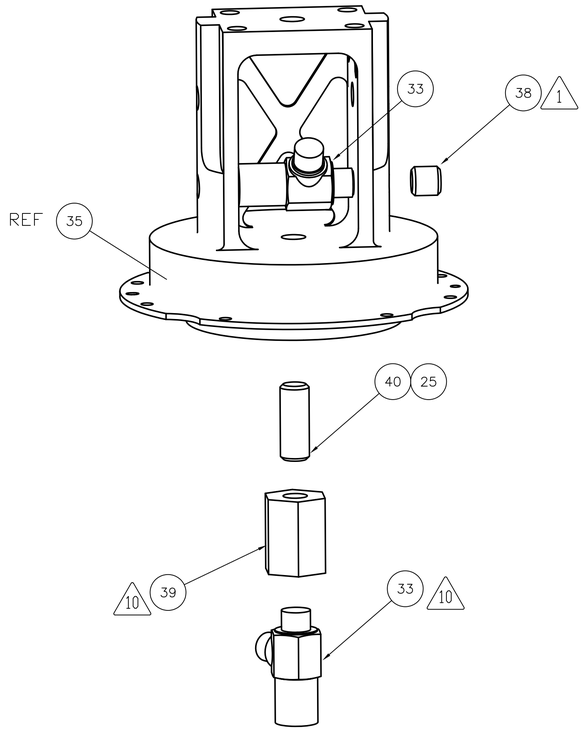

GENERAL VIEW
REFERENCE ONLY
SCALE: NONE
-7 CONFIGURATION,
ONLY ACCELEROMETERS AND
MASS SIMULATOR SHOWN

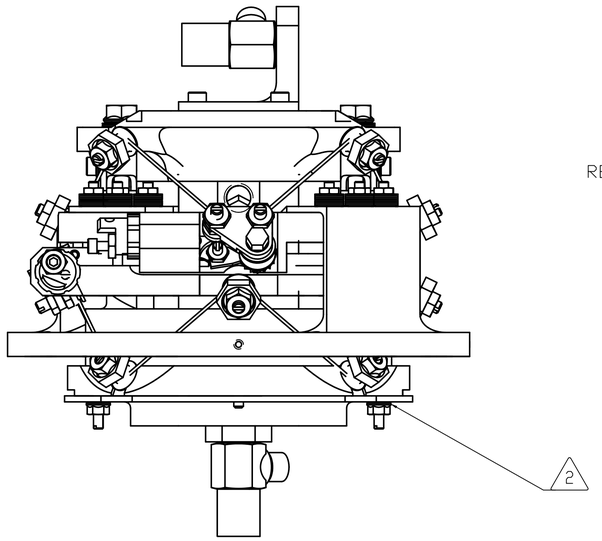

-7 CONFIGURATION

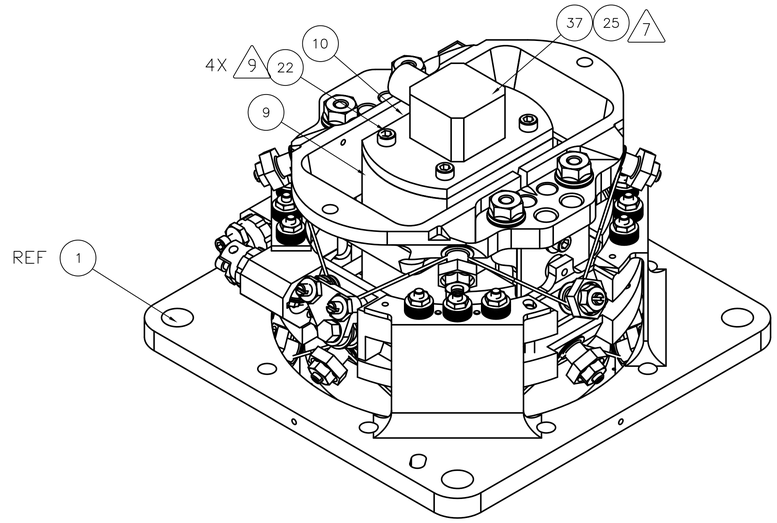

GENERAL VIEW
REFERENCE ONLY
SCALE: NONE
-6 CONFIGURATION

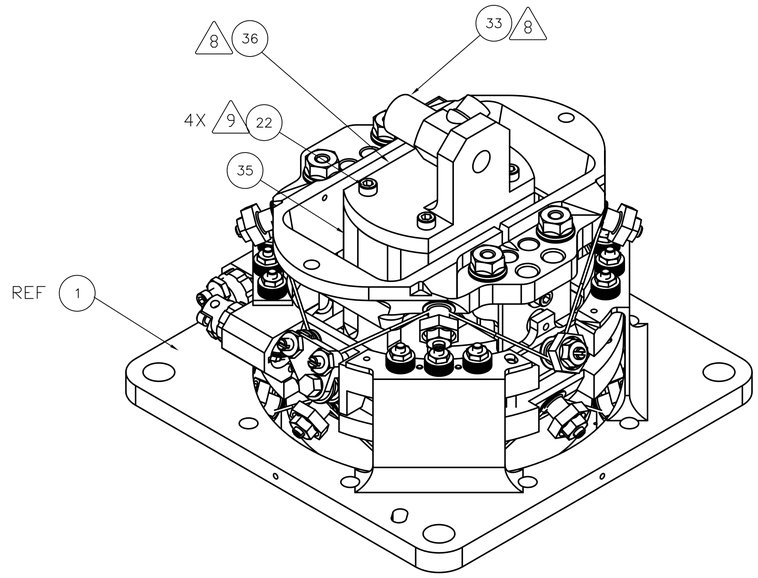

GENERAL VIEW
REFERENCE ONLY
SCALE: NONE
-7 CONFIGURATION

SIZE	CAGE NO		REV
A1	23835	10209800	A
SCALE NONE	UNCLASSIFIED	SHEET 3 OF 4	

REV 2/00

AutoCAD GENERATED

A1 10209800

Released on MAR-15-2004 by Richard G Bannister and signed by Richard S Mcnabb CHK, Paul D Macneal STRU, Michael D Knopp MATL, Dustin J Crumb DEGN, Mark A Weilert COGE, Richard G Bannister

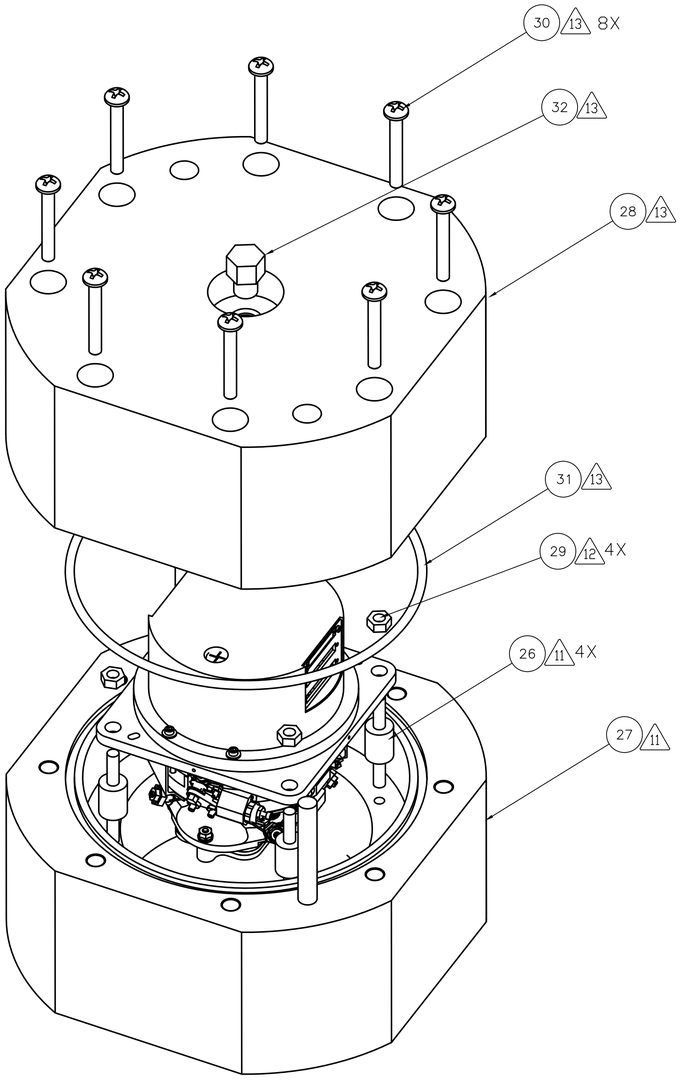

EXPLODED VIEW
REFERENCE ONLY
-5 CONFIGURATION
-1,-2,-3,-4, -8 AND -9 SIMILAR
-6 AND -7 SIMILAR WITH NO CAN

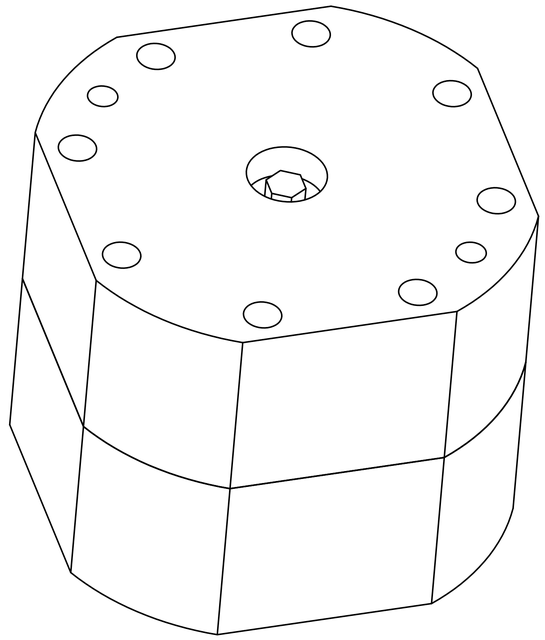

GENERAL VIEW
REFERENCE ONLY
SCALE: NONE
ALL CONFIGURATIONS

SIZE	CAGE NO		REV
A1	23835	10209800	A
SCALE NONE	UNCLASSIFIED	SHEET 4 OF 4	

AutoCAD GENERATED

REV 2/00

10209800

Released on MAR-15-2004 by Richard G Bannister and signed by Richard S Mcnabb CHK, Paul D Macneal STRU, Michael D Knopp MATL, Dustin J Crumb DEGN, Mark A Weilert COGE, Richard G Bannister

Open ECR List
PFM SSW BDA 10209800-5 S/N 009

1. HR-SP-JPL-ECR-003 -- Spectrometer BDA Envelope Height

CCLRC Rutherford Appleton Laboratory	DOCUMENT / ENGINEERING CHANGE REQUEST (ECR)	PRODUCT ASSURANCE Space Science and Technology Department

DCR / ECR Number:	HR-SP-JPL-ECR-003

Spacecraft / Project	**HERSCHEL**	**Originator's Name**	Martin Herman	
System / Experiment / Model	**SPIRE /**	**Signature**		
Sub-System		**Date**	November 20,2003	
Assembly		**Classification**	**Urgent**	**Routine**
Sub-Assembly		**Ref. Doc. / Drwg No.**	JPL dwg 10209721	
Item	Bolometer Detector Assembly (BDA)	**Reference**		

ECR/DCR Title	**Spectrometer BDA Envelope Height**

ECR Description

On the ICD Drawing 10209721 sheet 2, zone H4, the current maximum height dimension is 42.5 mm from the BDA mounting plate. This dimension needs to be changed to 43.6 to encompass the two spectrometer BDA types, SLW and SSW. Photometer BDA types do not require this change. The current dimension will be replaced with a note giving the two BDA type dependent values. The allowed 300mK stage shift given in note 9 will remain.

Need / Justification For Change

The Spectrometer BDA (types SLW and SSW) 300mK filter stacks were at some point increased in thickness due to the addition of a lens. This change was not flowed down into the BDA ICD. The SLW BDA S/N008 maximum height was measured at 44.04 mm from the mounting plate, which is 1.04 mm higher than the current allowed ICD range. The nominal 42.5 mm height plus the 0.5mm allowed displacement of the 300mK stage (see ICD note 9) gives the current 43.0 mm max height.

Affected Items / Work package (Title, Number, Issue, Para)

ICD drawing 10209721 rev B

Related Factors (Highlight as applicable)

Spacecraft	Performance	Power	Others (Specify)
Ground Segment	Elect. Interfaces	Weight	
Launch Vehicle	Mech. Interfaces	Schedule	
Payload	Test/Verification	Cost	

Attachments	Distribution

Change Approved Project		**Change Approved Customer**	
Project Closure		**Customer Closure**	

Waiver List

1) **HR-SP-JPL-RFW-005 (Sine Vibration Omission)**

2) **HR-SP-JPL-RFW-006 (Vibration Test Levels)**

CCLRC Rutherford Appleton Laboratory	REQUEST FOR WAIVER / DEVIATION (RFW/RFD)	PRODUCT ASSURANCE Space Science and Technology Department

RFW/RFD Number:	HR-SP-JPL-RFW-005

Spacecraft / Project	Herschel	**Originator's Name**	Kalyani Sukhatme	
System / Experiment / Model	SPIRE	**Signature / Date**		
Sub-System	detectors	**Request Type** (Highlight applicable request)	Waiver (RFW)	Deviation (RFD)
Assembly		**Organisation**	Jet Propulsion Laboratory	
Sub-Assembly		**Ref. Doc. / Drwg No.**	SPIRE-JPL-PRJ-000456	
Item		**References**		
Serial No.				

RFW/RFD Title	**BDA and JFET module sine test deletion**

End Items(s) Affected (Hardware, Software)

Name	CI-Number	Model(s)
Bolometric Detector Assemblies JFET Modules		CQM, PFM, FS CQM, PFM, FS

Requirement / Interface Documents Affected

Specification/Drawing Title	Number	Issue	Date	App. Paragraph
BDA-SSSD (SPIRE-JPL-PRJ-000456)		3.2	Jan 7, 2003	BDA-DES-10, JFET-DES-07

Description of Deviation / Discrepancy / Non-Conformance

High Level Sine- Vibe Test is not performed on these units

Other Items or Requirements (Potentially) Affected

Need for RFW/RFD and Rationale for Acceptance

The hardware has to be qualified under a cold vibration test and is installed in the cold vibration facility for the purpose of the test. The high level sine vibration test configuration will put the hardware and the personnel at risk since the cold vibration facility is not structurally capable of withstanding the high levels. Obtaining additional resources (cost and schedule) for developing a new set-up is not feasible at this time.

	Approved	Rejected	Name	Date
JPL Engineering:				
JPL Product Assurance:				
CCB-Chairman:				
Principal Investigator				
Product Assurance:				
Co-Investigator				
Prime Contractor				
ESA Project Office				

CCLRC Rutherford Appleton Laboratory	REQUEST FOR WAIVER / DEVIATION (RFW/RFD)	PRODUCT ASSURANCE Space Science and Technology Department

RFW/RFD Number:	HR-SP-JPL-RFW-006

Spacecraft / Project	Herschel	**Originator's Name**		
System / Experiment / Model	SPIRE	**Signature / Date**		
Sub-System	Detector	**Request Type** (Highlight applicable request)	Waiver (RFW)	Deviation (RFD)
Assembly	BDA	**Organisation**	Jet Propulsion Laboratory	
Sub-Assembly		**Ref. Doc. / Drwg No.**		
Item		**References**		
Serial No.				

RFW/RFD Title	

End Items(s) Affected (Hardware, Software)

Name	CI-Number	Model(s)
BDA		QM, CQM, PFM, FS

Requirement / Interface Documents Affected

Specification/Drawing Title	Number	Issue	Date	App. Paragraph
BDA-SSSD	BDA-DES-10	3.2	Jan 7, 03	

Description of Deviation / Discrepancy / Non-Conformance

1) **Random Vibration Test Levels are not the same as given in the BDA-SSSD (Issue 3.2), BDA-Des-10**
2) **There are five different flavours of the BDA. The qualification vibration test is done on only one QM unit which is of the PLW type.**

Other Items or Requirements (Potentially) Affected

Need for RFW/RFD and Rationale for Acceptance

1. **The random vibration test levels are as specified by Berend Winter (MSSL) in an email on May 2, 2003, which superceded the BDA-SSSD**
2. **The qualification test program in using the PLW flavor as the only Qual Model, is given in Interoffice Memorandum, Oct. 3, 2003, Henry Abakians, Subject: SPIRE BDA Random Vibration Test Program [IOM 5132-03-167]**

	Approved	Rejected	Name	Date
Engineering:				
Product Assurance:				
CCB-Chairman:				
Principle Investigator				
Product Assurance:				
Co-Investigator				
Prime Contractor				

ESA Project Office				

JPL

INTEROFFICE MEMORANDUM
5132-03-167
October 3, 2003
Project: Herschel/Planck

TO: Martin Herman

FROM: Henry Abakians ha

SUBJECT: SPIRE BDA random vibration test program

This IOM outlines the random vibration test program for Herschel/Planck project's SPIRE element. Due to schedule and cost constrains, our proposed test program does not strictly conform to JPL's standard random vibration program; however, it maintains a medium to low risk posture.
The recommendations will concentrate on the vibration environment since that is the source of highest stresses on the unit. The SPIRE qualification program also includes thermal cycling and accelerated aging, but it will not be addressed in this IOM.

The SPIRE element of the JPL Herschel/Planck project has several Bolometer Detector Assemblies (BDA). These BDAs are identical in their outer housing, and primarily vary in a thermally isolated suspension which contains the bolometer array and the feedhorn (the suspension is held on to the housing via two rows of braided Kevlar strings). There are five flavors to these suspensions: PSW, PMW, PLW, SSW, SLW (P: photometer, S: spectrometer, LW: long wave, MW: medium wave, SW: short wave). The suspensions also vary in their mass and center of gravity (PLW the heaviest, SSW the lightest).

In a traditional JPL Qual/FA test program, a Qual unit for each BDA flavor would be tested (3-axis, 2 min. per axis), and all subsequent flight units would be FA tested (3-axis test, FA levels, 1 min. per axis). In a traditional Protoflight program, all flight units would be protoflight tested (3-axis test, Qual levels, 1 min. per axis).

The SPIRE element has evolved into a Qual/FA/Protoflight test program. We have built and successfully tested a qual unit (CQM, PLW). It was random vibrated at Qual levels and durations (2 minutes) in three axes. This unit successfully passed the random vibration test, and remained within the specifications (performance or otherwise). Our proposed test program for all subsequent BDAs is as follows:

BDA type	test program	random vibe axis	duration
PSW	PF	x	2 min
PMW	PF	x	2 min
PLW	Qual/PF	3 axis Qual	2min/axis
		PF-x axis only	1 min
SSW	PF	x	2 min
SLW	PF	x	2 min

The test program deviates from a standard JPL program; however, we believe it maintains an acceptable risk posture for the following reasons:

1-The vibration in the z-direction is substantially more benign than x and y. Therefore, we can eliminate the random vibration test in the z-direction for all flight units (this is based on the CQM test results).

2-There is sufficient cross-talk between x and y (based on CQM test results). Therefore, we can eliminate the y direction shake and perform the test in the x-direction for an additional 1 minute (x is the more severe direction; moreover, since we are not concerned with low cycle fatigue failure – substantiated by the CQM test - we feel justified in extending the x-direction test duration to 2 minutes, thus indirectly testing for y-direction).
While it is clearly more desirable to test in y-direction directly, eliminating this test is primarily driven by cost and schedule constraints: all our test are performed at or below 100K, thus a one axis vibration will require a minimum of 3 work days; however, extending a 1 minute test to 2 minutes will not impact schedule, cost, or the safety of the hardware.

3-We have tested the heaviest assembly (PLW) for our qualification program. This ensures that our design is validated for the highest possible stresses in the Kevlar string.

4- Force transducers will be utilized in 3 directions. Their responses will be correlated with the CQM results providing additional assurance on hardware workmanship, reliability and robustness.

Concurrence: _____
John Forgrave,
Environmental requirements Engineering, Group Supervisor

Concurrence: _____
Paul MacNeal, Dynamics Engineer
Herschel/Planck

Concurrence: _____ for
Tim Larson, Mission Assurance Manager
Herschel/Planck

Distribution:
Bill McAlpine
Margaret Frerking
Michael O'Connell
Gary Parks
Kalyani Sukhatme
Mark Weilert

Open PFR List

Open PFR's on This Hardware (PFM SSW BDA 10209800-5 S/N 009):

NONE

Open PFR's on Similar Hardware:

1. PFR# Z81506 -- Short to ground in CQM PLW BDA (10209800-1 S/N 006)

PROBLEM FAILURE REPORT (PFR)

PFR# Z81506

Title: PLW-CQM 10MEGAOHM CONNECTION FROM GROUND TO V+ AND V-

Project: HSOP **Status:** OPEN	**Last Processed:** 08/13/2003	**Problem/Failure Date:** 08/13/2003	**Day & Time of Incident (GMT / UTC):** **Day:** 225 **Hr:** **Min:**
Log #	**Report Type:** FP	**SC or InstrumentID:**	**O** - Grnd / Test **O** - Eng. Model **X** - Flight **X** - Hardware **O** - Software
Originator: TURNER, ANTHONY D		**Report Date:** 08/13/2003	**Cognizant Engineer:**

SUBSYSTEM

Tier	Reference Designation	Nomenclature	Serial Number	Oper. Time	Operating Units
0	SPIR - SPECTOMETRIC AND PHOTOMETRIC INFRARED RECEIVER (SPIRE)				
1	10209800-1	PLW-CQM	006		
2					
3					

Problem Area: ELECPACK ~ Electronic Packaging [HSOP-ELEPC]

DESCRIPTION

Description of Problem/Failure:
A POWER LINE ASSEMBLY TEST SHOWED A 10 MEGAOHM RESISTANCE FROM THE V+ TO GND LINES AND A 10.92 MEGAOHM RESISTANCE FROM THE V- TO GND LINES. BOTH LINES SHOULE HAVE SHOWN A >30MEGAOHM RESISTANCE TO GROUND.

Reporting Location: JPL 103 [B103]

Problem/Failure Noted During: Assembly Test [A5]

Specific Environment: Assembly & Rework [04]

Procedure:	**Revision:**	**Paragraph:**

VERIFICATION

Verification and Analysis:
PLEASE REFER TO IR 918970. LINE A CORRESPONDING TO TEST POINT 2 ON DETECTOR R1 SHOWED A SHORT TO GND PASSED THE LOAD RESISTORS. THIS SHORT MAKES A PATH FROM V+ TO GND=10MOHM AND V- TO GND=10.92MOHM. THIS SHORT SHOULD NOT EFFECT THE PERFORMANCE OF THE DEVICE SINCE THERE IS A 1 MOHM CONNECTION FROM V+ TO GND AND V- TO GND BUILT INTO THE READOUT CIRCUITRY ON THE JFET MODULE.

Cause of Problem/Failure: Workmanship: Fabrication or Assembly [W1]

Person Completing This Section: A. TURNER **Date:** 08/13/2003

PART DATA

Piece Part Name	Part #	Serial #	FA Log #	Circuit Desig.	Mfr. Code	Defect
PLW-CQM	10209800-1	006				

CORRECTIVE ACTION

Corrective Action Taken:
NO CORRECTIVE ACTION NEEDED AT THIS TIME. SHORT CAN BE ELIMINATED BY REMOVAL OF 2 WIREBONDS THAT WILL REMOVE SIGNAL R1 FROM THE CIRCUIT IF IT IS DEEMED NECESSARY.

Disposition of Subsystem or Assembly:	**Effectivity:** This Unit

CODES & RATINGS

Lessons Learned Candidate: N	**Alert Concern:** N	**Mission Critical Failure:** N	**STS Criticality:**
Personnel Safety: N	**Hardware Safety:** N	**Safety Status:** SS has not reviewed yet. -	
See PFR #	**See ISA #**	**Failure Effect Rating:**	
ECR #	**Waiver #**	**Failure Cause/ Corrective Action Rating:**	
See Other: IR918970			

SIGNATURES

Cognizant Engineer		
Project Element Manager		
Mission Assurance Manager		
Project Manager		

ISSUES

ATTACHMENTS

NO ATTACHED DOCUMENTS ON FILE.

CHANGE LOG

Changes

** CHANGELOG: Z81506 **********
Changes made on 08/13/2003 at 14:51:19 by ATURNER
ROOT.SYSID was: "", now is: "PFR"
ROOT.PROJECT was: "", now is: "HSOP"
ROOT.PFR_NO was: "", now is: "Z81506"
ROOT.IS_PFR was: "NO", now is: "YES"
ROOT.ACTIVE was: "NO", now is: "YES"
ROOT.PFR_DATE was: "", now is: "08/13/2003"
ROOT.ORIGINATN was: "", now is: "08/13/2003"
ROOT.VERIFY_DTE was: "", now is: "08/13/2003"
ROOT.NEED_MF_UP was: "NO", now is: "YES"
ROOT.SAFETY was: "", now is: "N"
ROOT.SEF was: "", now is: "N"
ROOT.ALERT was: "", now is: "N"
ROOT.MCF was: "", now is: "N"
ROOT.VENDOR was: "", now is: "VEN"
ROOT.REPORT_LOC was: "", now is: "B103"
ROOT.ORIGINATOR was: "", now is: "TURNER, ANTHONY D"
ROOT.VERIFYOR was: "", now is: "A. TURNER"
ROOT.SUB_SYS was: "", now is: "SPIR"
ROOT.PROB_AREA was: "", now is: "HSOP-ELEPC"
ROOT.PHASE was: "", now is: "FP"
ROOT.TEST was: "", now is: "A5"
ROOT.ENVIRON was: "", now is: "04"
ROOT.CAUSE was: "", now is: "W1"
ROOT.EFFECTVTY was: "", now is: "This Unit"
ROOT.SEE_OTHER was: "", now is: "IR918970"
ROOT.AT_YEAR was: "", now is: "2003"
ROOT.AT_DAY was: "", now is: "225"
ROOT.TITLE was: "", now is: "PLW-CQM 10MEGAOHM CONNECTION FROM GROUND TO V+ AND V-"
ROOT.DESCRIPTN was: "", now is: "A POWER LINE ASSEMBLY TEST SHOWED A 10 MEGAOHM RESISTANCE FROM THE V+ TO GND LINES AND A 10.92 MEGAOHM RESISTANCE FROM THE V- TO GND LINES. BOTH LINES SHOULE HAVE SHOWN A >30MEGAOHM RESISTANCE TO GROUND."
ROOT.ANALYSIS was: "", now is: "PLEASE REFER TO IR 918970. LINE A CORRESPONDING TO TEST POINT 2 ON DETECTOR R1 SHOWED A SHORT TO GND PASSED THE LOAD RESISTORS. THIS SHORT MAKES A PATH FROM V+ TO GND=10MOHM AND V- TO GND=10.92MOHM. THIS SHORT SHOULD NOT EFFECT THE PERFORMANCE OF THE DEVICE SINCE THERE IS A 1 MOHM CONNECTION FROM V+ TO GND AND V- TO GND BUILT INTO THE READOUT CIRCUITRY ON THE JFET MODULE."
ROOT.CORR_ACTN was: "", now is: "NO CORRECTIVE ACTION NEEDED AT THIS TIME. SHORT CAN BE ELIMINATED BY REMOVAL OF 2 WIREBONDS THAT WILL REMOVE SIGNAL R1 FROM THE CIRCUIT IF IT IS DEEMED NECESSARY."
ROOT.Y2K was: "", now is: "N"
PFR_UNIQ.PFR_NO was: "", now is: "Z81506"
PFR_UNIQ.HRDWR_SFTY was: "", now is: "N"
PFR_UNIQ.FLT_H_W was: "NO", now is: "YES"
PFR_UNIQ.FLT was: "NO", now is: "YES"
HOBO.SYSID was: "", now is: "PFR"
HOBO.PROJECT was: "", now is: "HSOP"
HOBO.PFR_NO was: "", now is: "Z81506"
HOBO.BADG_ASSN2 was: "", now is: "103168"

--end of change log--

SPIRE
Bolometer Detector Assembly
Handling Document

Prepared by
Mark Weilert

20 August, 2003
revised 20 Nov. 03

WARNINGS

BDA is Contamination Sensitive: Open Red Shipping container only in a FED-STD-209 Class 10000 clean room (ISO 14644-1 class 7) or better. Handle BDA with gloves only.

BDA is ESD Sensitive, handle with grounding straps, ESD-safe gloves and ESD smocks at an ESD-safe workstation. Note that no connector savers or other connector protection are shipped with the BDA, per the business agreement.

BDA is Fragile: Do not drop or otherwise shock. Take care to avoid applying unnecessary force to the Kevlar suspended portion of the BDA. In particular, do not torque the thermal strap interface fasteners to greater than 320 N*mm. The BDA is preferably held/supported either by its square mounting flange, or by the light-seal can which holds the electrical connectors. Note that the red shipping container provides only minimal shock isolation, and should be treated as equally fragile while the BDA is inside. Because the Kevlar tension is higher at room temperature than cold, **DO NOT SHAKE TEST AT ANY TEMPERATURE ABOVE 100K** (except for low-level survey shakes, 0.25g typical). A full level shake at room temperature risks **catastrophic** failure. Avoid touching Kevlar braid with anything, it is sensitive to abrasion or cutting by seemingly smooth objects.

BDA is Humidity Sensitive: The Kevlar tension increases with moisture absorption. Keep in a dry environment when possible during storage or while not being handled. (While being actively handled, higher humidity is acceptable to maintain ESD safety, 35-50% RH typical.)

BDA is Temperature Sensitive: The Kevlar tension and creep increases at high temperatures, **DO NOT BAKE OUT AT ABOVE 80°C.**

Unpacking Procedure:

The BDA is shipped in a multi-layer container. A custom shipping container (red) inside a case inside case. The case should be opened only in a reasonably clean area in order to protect the red shipping container, which should only be opened in a class 10000 or better clean room at an ESD-safe workstation. The red shipping container has three shock-monitors attached to the top, labeled 10g, 20g and 50g. The monitors have steel balls and springs which are contained between plastic rails if the unit has not seen the marked shock level. If the monitors have experienced their specified shock, some of the balls will be loose in the bottom. Please note the state of the three shock monitors and report the result to JPL. These monitors may need to be removed from the top of the red shipping container before it is opened, since they probably obstruct access to the vent plug. They are attached with a double-stick tape adhesive and may be pulled off by applying force to the white base. (Avoid just pulling on the clear case, as this will likely open up the monitor and spill the contents.) **NOTE: The cases holding the red shipping container must be returned to JPL for use in future shipments.**

Opening the Red Shipping Container:

An exploded view of the container is shown below. The top is the side with the vent plug in the center. Make sure the area around the plug is clean, then remove the plug to equalize the pressure. The 8 closeout screws are next loosened alternately (with a 1/8"

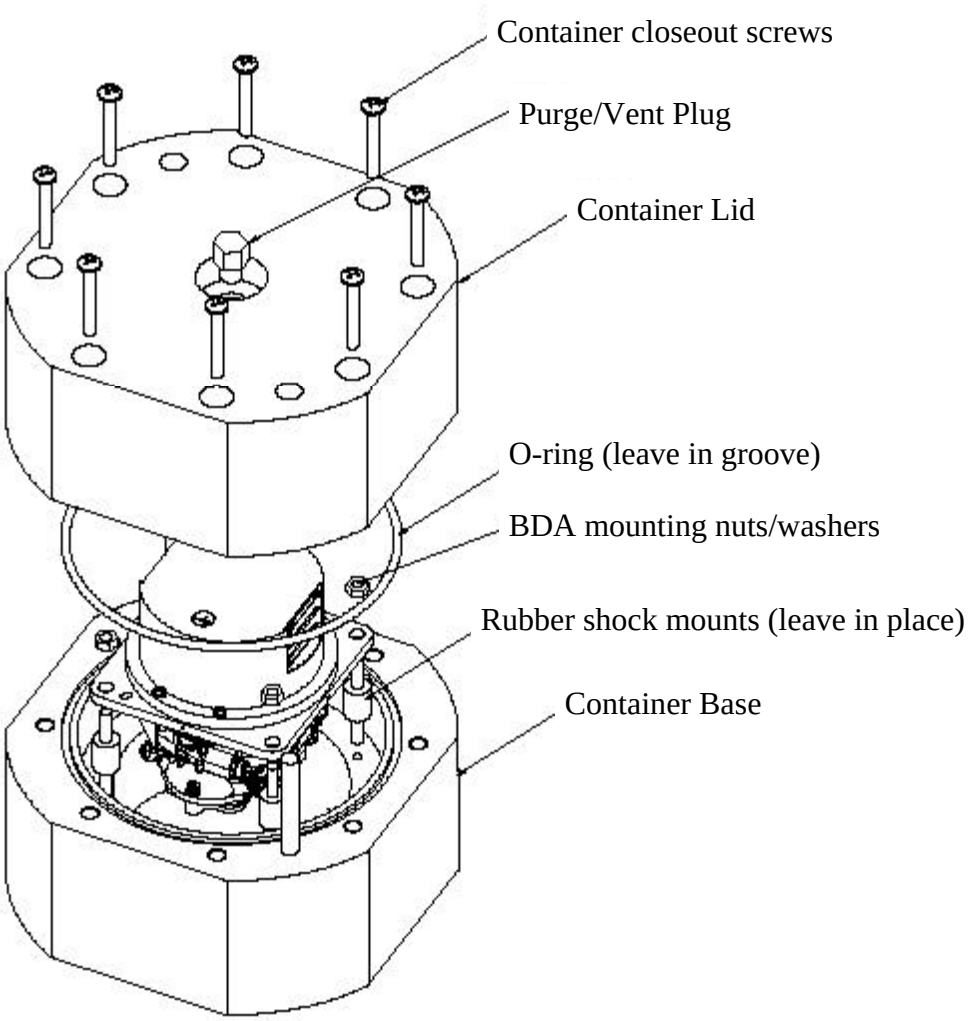

hex key) to relieve pressure on the o-ring seal, and then backed off completely to disengage the screws from the base. The container lid is then lifted straight up to open the container. Two guide pins prevent significant sideways motion of the lid until it is high enough to clear the BDA The BDA is removed from the shipping container base by removing the mounting nuts and washers from the rubber shock mounts and lifting the BDA straight up.

For re-installation of the BDA into the red container, note that the light can must be up, as shown, to prevent the container lid from hitting the BDA. Also, the epoxy terminations of the Kevlar braids should be oriented towards the cutouts in the container base.

SPIRE

Subject: BDA Electronic Handling Procedure, SPIRE S/SW-PFM

Prepared by: Anthony Turner

Document No:

Issue: Draft **Date: 3/9/2004**

Checked by: ……. **Date:……**

Approved by:…… **Date:……**

Distribution

Change Record

Issue	Date

Table of Contents

1. Introduction…..…… page 6
2. Handling……... page 6
3. Signal Requirements……... page 6
4. Device Isolation…… page 7
5. Room Temperature Detector Values Check……. page 7
6. Load Resistor-Detector Continuity Check…… page 10

Glossary

1. Introduction:

This document provides the Electronic Handling Procedure for the Proto-Flight Model-Spectrometer Short Wavelength Bolometer Detector Array.

2. Handling:

1. **BDA is Contamination Sensitive**: Handle BDA with Gloves only in a FED-STD-209 Class 10000 clean room (ISO 14644-1 class 7) or better.

2. **BDA is ESD Sensitive**: Electronic parts included in the S/SW-PFM science instrument are subject to electro-static discharge failures. Please handle with appropriate ESD hardware handling procedures. Handle with grounding straps, ESD-safe gloves, ESD smocks at an ESD-safer workstation.

3. Signal Requirements:

The interface circuit for the BDA contains a series of resistive networks as depicted in figure 1. Two high resistive load resistors (~ 6-14 MΩ) are coupled to a NTD Ge thermistor (R_{bolo}) through a lithographed metalization circuit and provide the bias circuitry for the device. The maximum DC input voltage for the bias lines V+ and V- lines is +/- 1 V, and the maximum AC input voltage is 100mV rms.

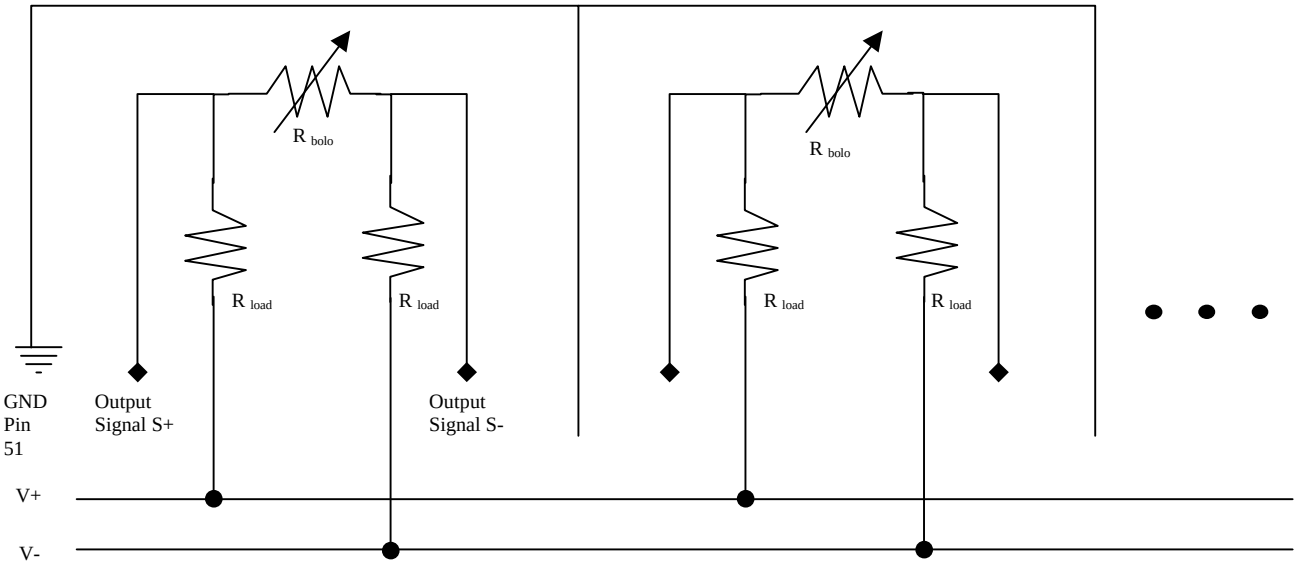

Figure 1: Interface circuit of the Bolometer Detector Array

DC Voltage-Current Limits for Room Temperature Detector Values Check:

Signal	Pin	Nominal Value	Max Value
V+	25	+50mV	+1 V
V-	50	-50mV	-1 V
I+,I-	25,50	10µA	25µA

DC Voltage-Current Limits for room temperature Load Resistor-Detector Continuity Check:

Signal	Pin	Nominal Value	Max Value
V+	25	+50mV	+1 V
V-	50	-50mV	-1 V
I+, I-	25,50	<0.5µA	1µA

4. Device Isolation Check:

The 300mK stage Kevlar suspended portion of the detector chassis is grounded directly to the electronic ground on pin 51 of the nanonics 51 pin connectors on each side. A resistance of less than 200Ω can be checked from the thermal strap of the 300mK stage to electrical ground pin 51. The 2K stage is electrically isolated from the electronic ground via the Kevlar supports. Measuring from pin 51 to any metal section of the 2K stage will yield an open circuit.

5. Room Temperature Detector Values Check

The final measured DC resistance value for each of the bolometer detector at room temperature is shown in the Table 1 and 2. The measurements bypass the load resistors in the circuit measuring directly through the output signal pins on the two nanonics 51 pin connectors. All measurements were performed with a Fluke 87 True RMS Multimeter set in the 4kΩ range. All measurements are in kΩ unless designated otherwise. Channels that are out of range are re-measured using the 40MΩ range to determine their value. The failure mode of any particular channel is also designated in table 1 and 2. The designation for the failure modes are open- Channel open at 300mK, short-channel shorted at 300mK, and float- channel floating at 300mK.

Table 1: S/SW-PFM Room Temperature DC Detector Measurements J05 connector

Connector Label	Signal	Nanonics Pin From	Nanonics Pin To	Detector Label	Resistance (kohms)	Failure Mode
Z1/J05	1	1	26	R1	3.92M	
	2	2	27	A4	1.997	
	3	3	28	A3	1.962	
	4	4	29	A2	1.927	
	5	5	30	A1	1.904	
	6	6	31	DK1	1.827	
	7	7	32	B3	1.952	
	8	8	33	B2	1.886	
	9	9	34	B1	1.846	
	10	10	35	C3	1.846	
	11	11	36	C2	1.786	
	12	12	37	C1	1.769	
	13	13	38	D3	1.817	
	14	14	39	D2	1.799	
	15	15	40	D1	1.827	
	16	16	41	E3	1.919	
	17	17	42	E2	1.92	
	18	18	43	E1	1.899	
	19	19	44	F3	2.081	
	20	20	45	F2	2.05	
	21	21	46	F1	1.973	
	22	22	47	G1	2.097	
	23	23	48	T1	1.996	
	24	24	49	G2	2.078	
	V+ to V-	25	50		0.723M	
	V- to gnd	50	51		>30M	
	V+ to gnd	25	51		>30M	
	Chassis to gnd				92ohms	

Table 2: S/SW-PFM Room Temperature DC Detector Measurements J06 connector

Connector Label	Signal	Nanonics Pin From	Nanonics Pin To	Detector Label	Resistance (kohms)	Failure Mode
Z1/J06	1	1	26		1.366	
	2	2	27		1.361	
	3	3	28		1.333	
	4	4	29		1.316	
	5	5	30		1.3	
	6	6	31		1.282	
	7	7	32	G3	1.872	
	8	8	33	G4	1.845	
	9	9	34	DK2	1.797	
	10	10	35	F5	1.836	
	11	11	36	F4	1.812	
	12	12	37	E6	1.736	
	13	13	38	E5	1.862	
	14	14	39	E4	1.852	
	15	15	40	D7	1.791	
	16	16	41	D6	1.84	
	17	17	42	D5	17.32M	open
	18	18	43	D4	1.974	
	19	19	44	C6	1.896	
	20	20	45	C5	1.968	
	21	21	46	C4	2.003	
	22	22	47	B5	2.006	
	23	23	48	B4	2.018	
	24	24	49	T2	2.024	
	V+ to V-	25	50		0.722M	
	V- to gnd	50	51		>30M	
	V+ to gnd	25	51		>30M	
	Chassis to gnd				92ohms	

6. Load Resistor-Detector Continuity Check

A DC continuity check of the load resistors in series with the bolometer detectors will complete the electrical checkout at room temperature. The test can be performed with a Fluke 87 True RMS multimeter set on the 40MΩ scale. The data set measures from V+ to output signal S+ and V- to output signal S- for each channel. The nominal value read for the live bolometer channels (room temp detector DC resistance ~ 1.5kΩ) should read approximately 3-6MΩ. Channels with open bolometer channels will give values 8MΩ or higher. The Data sets for the S/SW-PFM for the final test through the entire circuit are shown in Table 3.

Table 3: S/SW-PFM Load Resistor- Detector DC Continuity Check J05 connector

Connector Label	Signal	Detector Label	Resistance V+ to S+ (Mohms)	Resistance V- to S- (Mohms)
Z1/J05	1	R1	5.35	5.32
	2	A4	4.4	4.4
	3	A3	4.4	4.4
	4	A2	4.43	4.42
	5	A1	4.44	4.43
	6	DK1	4.44	4.48
	7	B3	4.44	4.44
	8	B2	4.45	4.44
	9	B1	4.46	4.45
	10	C3	4.48	4.47
	11	C2	4.48	4.48
	12	C1	4.32	4.35
	13	D3	4.48	4.48
	14	D2	4.48	4.48
	15	D1	4.49	4.49
	16	E3	4.5	4.49
	17	E2	4.4	4.36
	18	E1	4.52	4.52
	19	F3	4.52	4.52
	20	F2	4.44	4.44
	21	F1	4.52	4.52
	22	G1	4.54	4.53
	23	T1	4.55	4.53
	24	G2	4.54	4.53

Table 4: S/SW-PFM Load Resistor- Detector DC Continuity Check J06 connector

Connector Label	Signal	Detector Label	Resistance V+ to S+ (Mohms)	Resistance V- to S- (Mohms)
Z1/J06	1		4.24	4.24
	2		4.24	4.24
	3		4.28	4.27
	4		4.28	4.28
	5		4.28	4.28
	6		4.28	4.28
	7	G3	4.28	4.31
	8	G4	4.3	4.29
	9	DK2	4.3	4.29
	10	F5	4.31	4.31
	11	F4	4.28	4.28
	12	E6	4.29	4.29
	13	E5	4.28	4.28
	14	E4	4.3	4.28
	15	D7	4.3	4.29
	16	D6	4.3	4.29
	17	D5	8.32	8.24
	18	D4	4.32	4.32
	19	C6	4.33	4.33
	20	C5	4.36	4.36
	21	C4	4.35	4.35
	22	B5	4.36	4.36
	23	B4	4.36	4.36
	24	T2	4.36	4.36

EIDP Coverpage For PFM SSW BDA

Unit Identfication							
	Name	PFM SSW BDA					
	Part #	10209800-5					
	S/N	#009					

Environmemtal Testing							
		Axes Tested	Temperature	Duration or Number of Cycles	Pass/Fail	Requirement	Source	Waiver #
	Random Vibration Test	X	100 K	2 min per axis	P	X, Y, Z at 90 K 1 min per axis	SSSD Sec # 3.4	HR-SP-JPL-RFW-006
	High Level Sine Vibe Test	None	NA	NA	NA	X, Y, Z at 90 K	SSSD Sec # 3.4	HR-SP-JPL-RFW-005
	Bakeout	NA	NA	NA	NA	None (other than as part of the assembly procedure)	D-20549	
	Thermal Cycles	NA	RoomT to ~ 6 K	2	P	1 thermal cycle roomT to 77 K (max 5)	D-20549	

Other Testing		Frequency [Hz]						
		Pre-full level	Post-full level			Minimum Performance	Source	Waiver #
	Lowest Resonant Frequency	307 Hz	305 Hz			> 200 Hz (Goal: >250 Hz)	SSSD Sec # 3.1.3	NA
	Metrology Measurements were performed before and after the Vibration Test and the Thermal Cycles							
		Motion in X/Y	Motion in Z		Meets Goal ?	Performance Goal	Source	Waiver #
	Maximum motion due to Random Vibration Test	19 μm	38 μm		Y	125 μm in X/Y and 500 μm in Z	SSSD Sec # 3.1.1	NA
	Maximum motion due to the 1st thermal cycle	7 μm	14 μm		Y	125 μm in X/Y and 500 μm in Z	SSSD Sec # 3.1.1	NA
	Maximum motion due to the 2nd thermal cycle	3 μm	3 μm		Y	125 μm in X/Y and 500 μm in Z	SSSD Sec # 3.1.1	NA
	Cumulative Maximum motion	31 μm	64 μm		Y	125 μm in X/Y and 500 μm in Z	SSSD Sec # 3.1.1	NA
	Cold Continuity Measurements were made during each of the thermal cycles							
					Pass/Fail	Requirement	Source	Waiver #
	Cold Continuity Test (1st Thermal Cycle)				P	None	NA	NA
	Cold Continuity Test (2nd Thermal Cycle)				P	None	NA	NA

Sine
101369, Run # 3, X axis
Spire BDA
P/N 10209800, S/N 009

Force Sum X

Before Shake, Cold

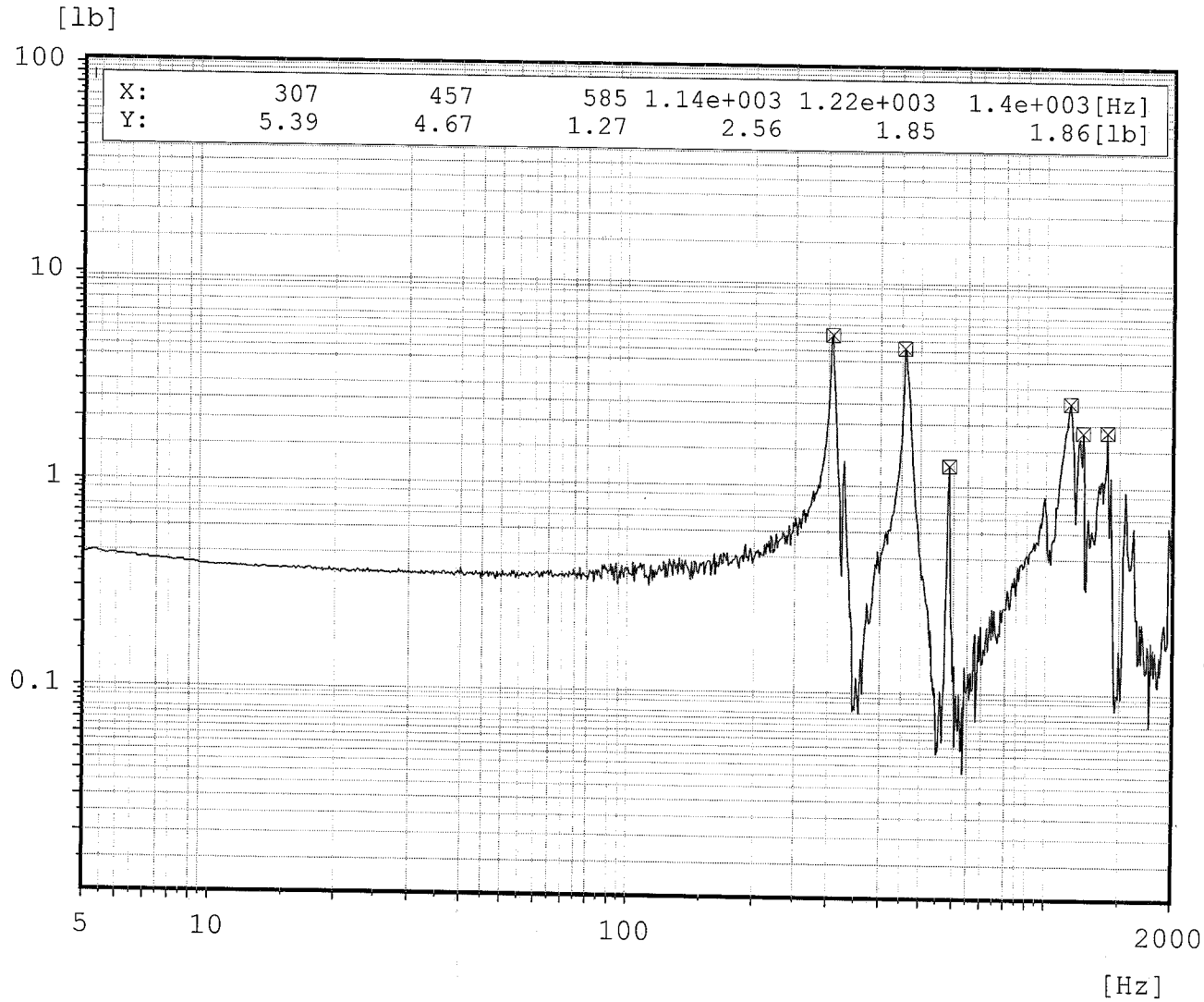

Chan.no: 5
Chan.type: W RMS
Sweep type: logarithmic
Sweeps done: 1
Sweeps req.: 1
Sweep direct.: up
Sweep rate: 4.00 Oct/min
Contr.strat.: Maximum
Unit: lb
Contr.strat.: Closed loop

-- Testing time --
elapsed: 000:02:09
remaining: 000:00:00

Date: 12-03-03
Time: 12:15:08

964#1/Amp #2/ M+P #1

Cold

C:\VcpNT\Daten\m+p\SPIRE\BDA\101403\101403 run 3 xax.rsn

Sine
101369, Run # 3, X axis
Spire BDA
P/N 10209800, S/N 009

Force Sum Y

Before Shake, Cold

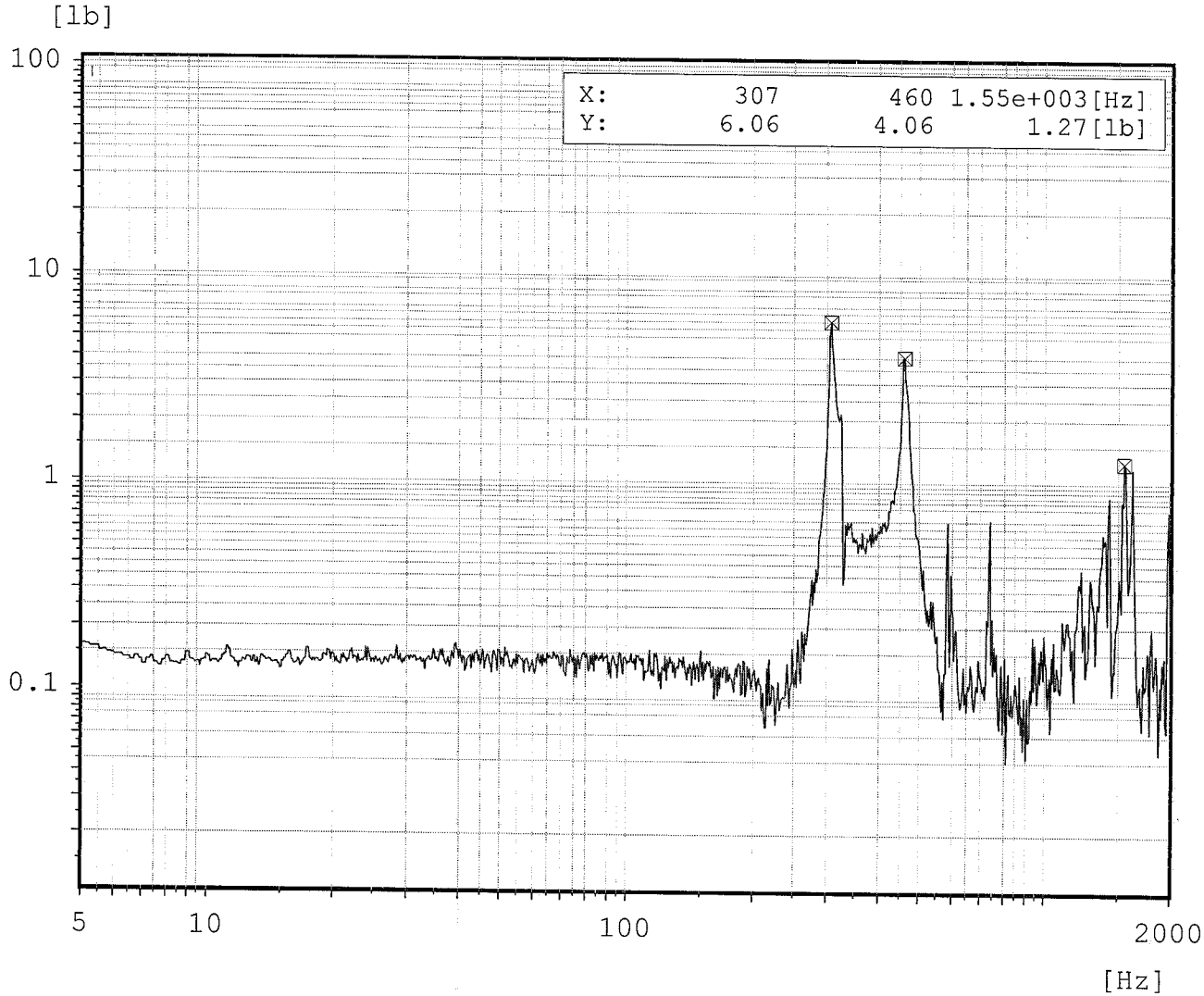

Chan.no: 6
Chan.type: W RMS
Sweep type: logarithmic
Sweeps done: 1
Sweeps req.: 1
Sweep direct.: up
Sweep rate: 4.00 Oct/min
Contr.strat.: Maximum
Unit: lb
Contr.strat.: Closed loop

-- Testing time --
elapsed: 000:02:09
remaining: 000:00:00

Date: 12-03-03
Time: 12:15:08

964#1/Amp #2/ M+P #1

Cold

C:\VcpNT\Daten\m+p\SPIRE\BDA\101403\101403 run 3 xax.rsn

Random

101403, Run # 7, X axis

SPIRE BDA

P/N 10209800, S/N 009

Control channel

0dB, Cold

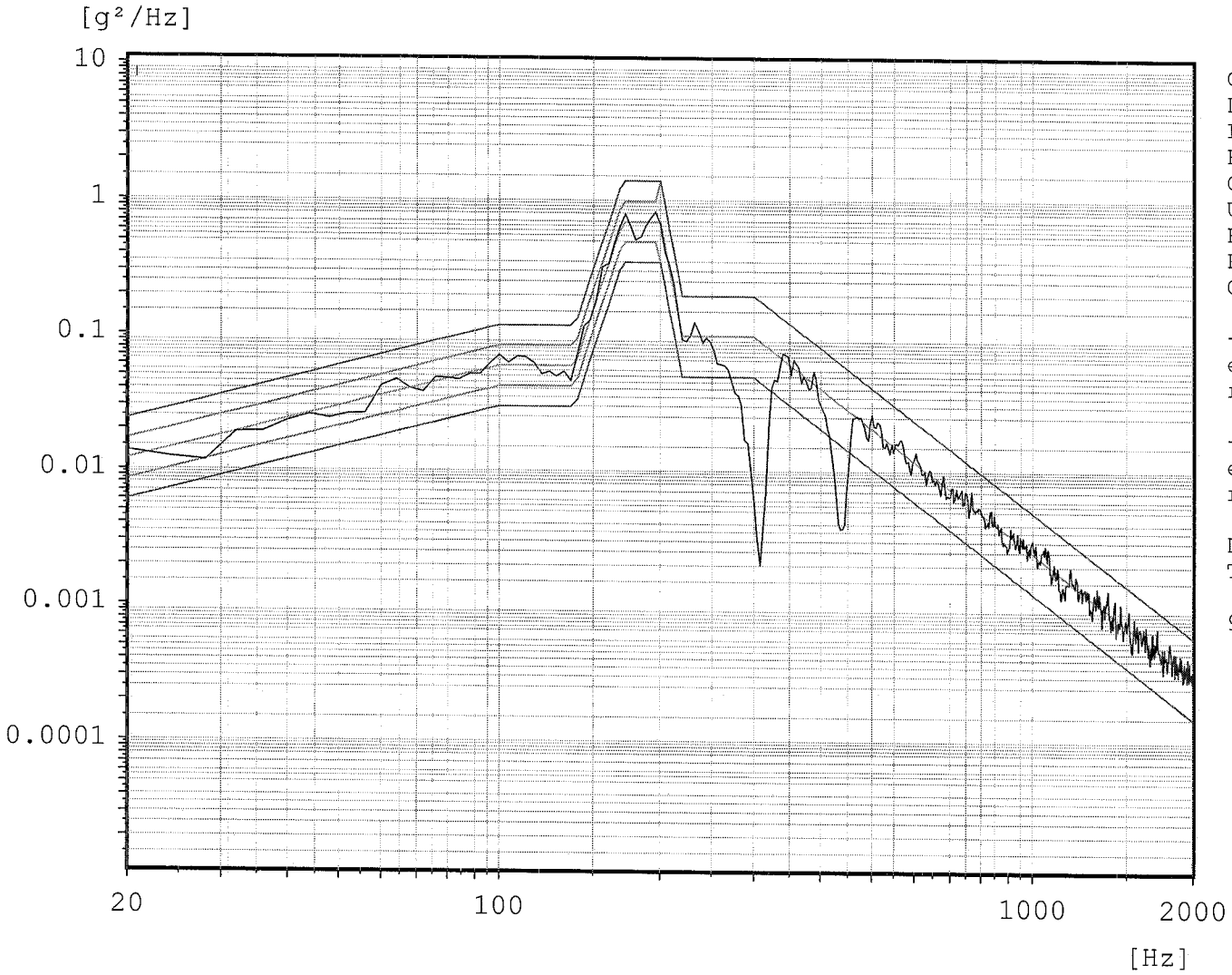

Chan.type:	X
DOF:	180
Level:	0.0 dB
Resolution:	4 Hz
Contr.strat.:	Maximum
Unit:	g²/Hz
RMS (act.):	7.53 g
RMS (req.):	7.945 g
Contr.strat.:	Closed loop

-- Time on act. level --

elapsed:	000:02:00
remaining:	000:00:00

-- Time total --

elapsed:	000:03:26
remaining:	000:00:-1

Date:	12-03-03
Time:	13:09:14

964#1/ Amp#2/ M+P#1

Cold

C:\VcpNT\Daten\m+p\SPIRE\BDA\101403\101403 run 7 xax.rrn

Random

101403, Run # 7, X axis

SPIRE BDA

P/N 10209800, S/N 009

Force Sum X

0dB, Cold

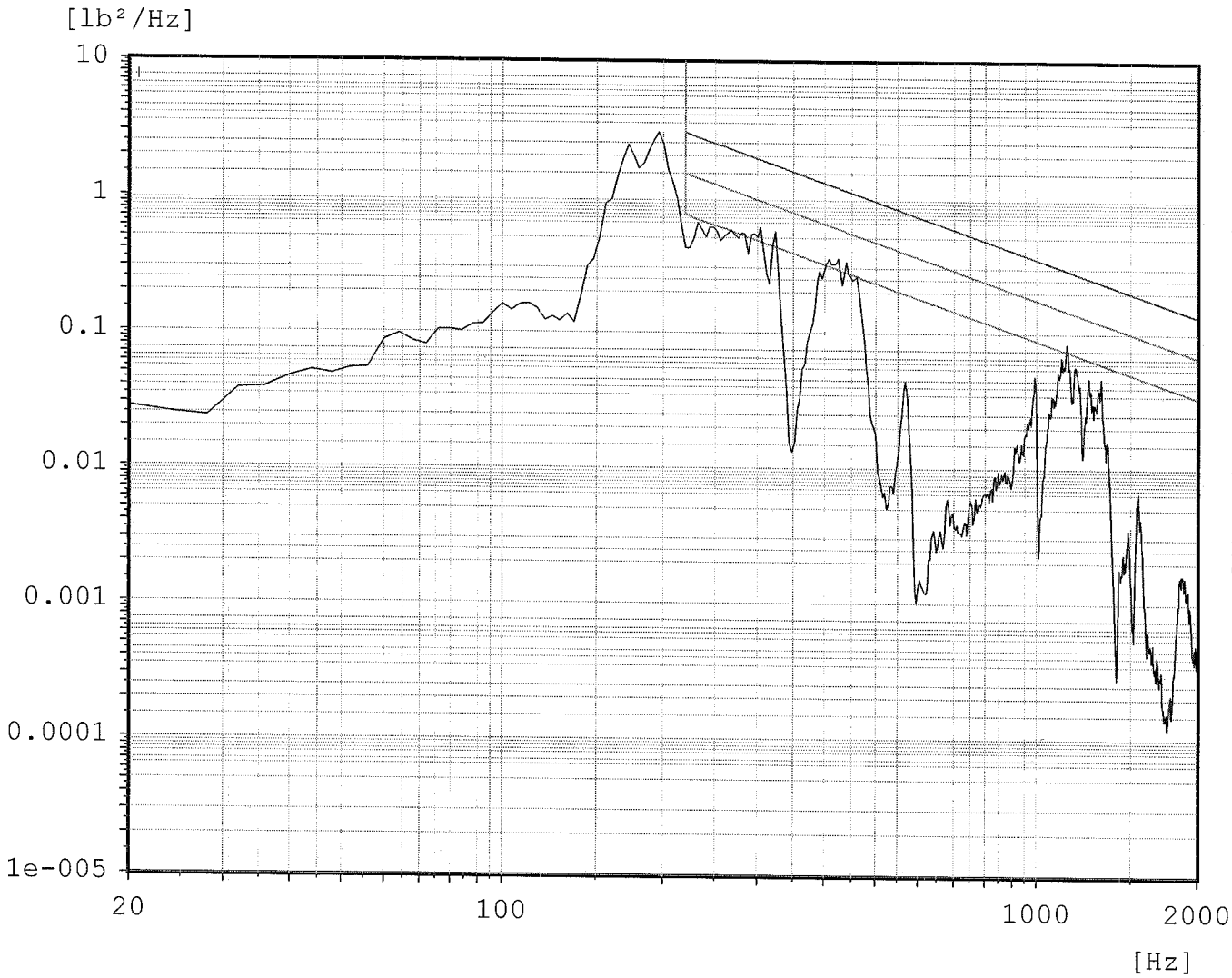

Chan.no:	5
Chan.type:	W
DOF:	90
Level:	0.0 dB
Resolution:	4 Hz
Contr.strat.:	Maximum
Unit:	lb²/Hz
RMS (act.):	15.21 lb
Contr.strat.:	Closed loop

-- Time on act. level --

elapsed:	000:02:00
remaining:	000:00:00

-- Time total --

elapsed:	000:03:26
remaining:	000:00:-1

Date:	12-03-03
Time:	13:09:14

964#1/ Amp#2/ M+P#1

Cold

C:\VcpNT\Daten\m+p\SPIRE\BDA\101403\101403 run 7 xax.rrn

Random
101403, Run # 7, X axis
SPIRE BDA
P/N 10209800, S/N 009

Force Sum Y

0dB, Cold

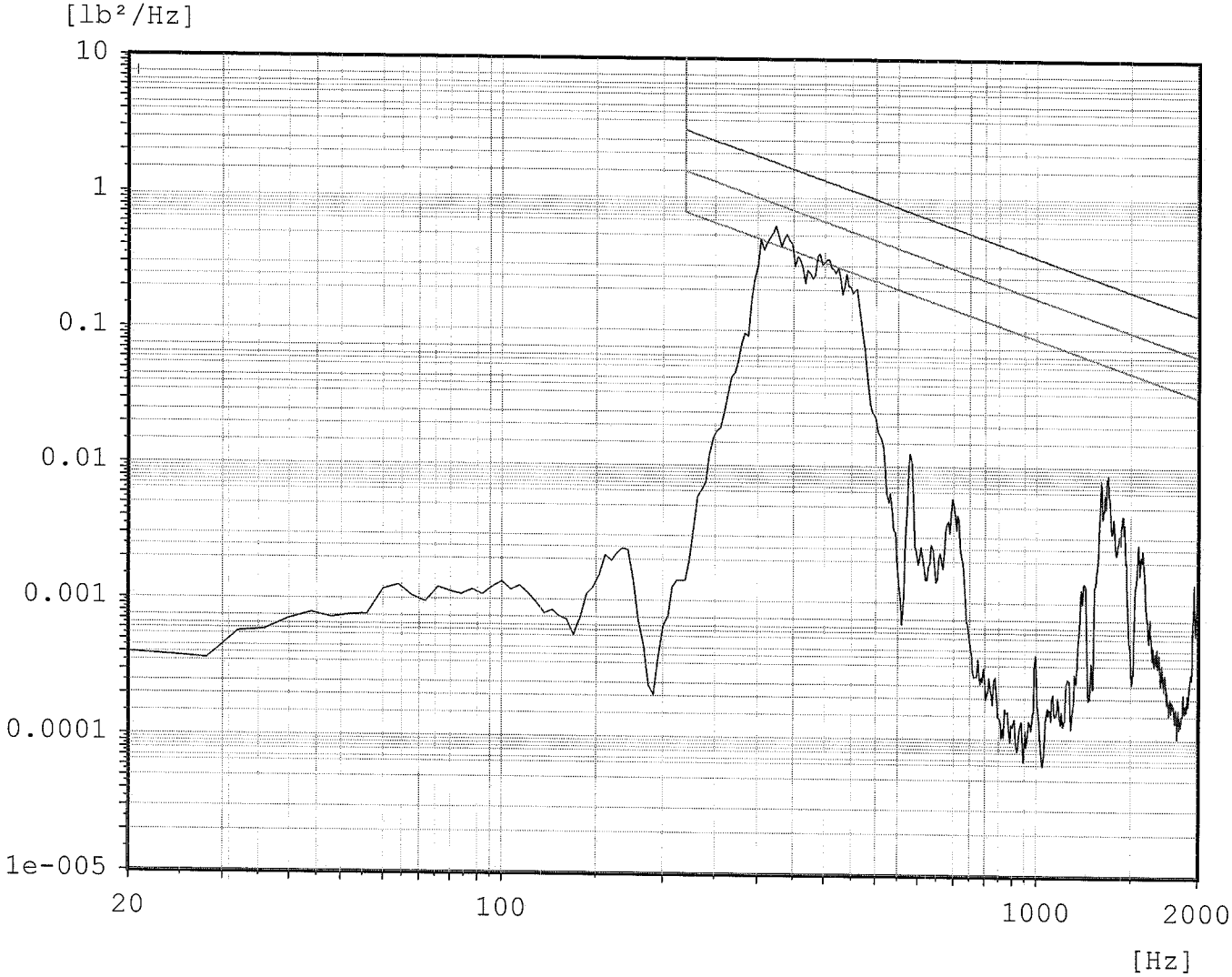

Chan.no:	6
Chan.type:	W
DOF:	90
Level:	0.0 dB
Resolution:	4 Hz
Contr.strat.:	Maximum
Unit:	lb²/Hz
RMS (act.):	8.02 lb
Contr.strat.:	Closed loop

-- Time on act. level --

elapsed:	000:02:00
remaining:	000:00:00

-- Time total --

elapsed:	000:03:26
remaining:	000:00:-1

Date:	12-03-03
Time:	13:09:14

964#1/ Amp#2/ M+P#1

Cold

C:\VcpNT\Daten\m+p\SPIRE\BDA\101403\101403 run 7 xax.rrn

Sine

101369, Run # 9, X axis

Spire BDA

P/N 10209800, S/N 009

Force Sum X

After Shake, Cold

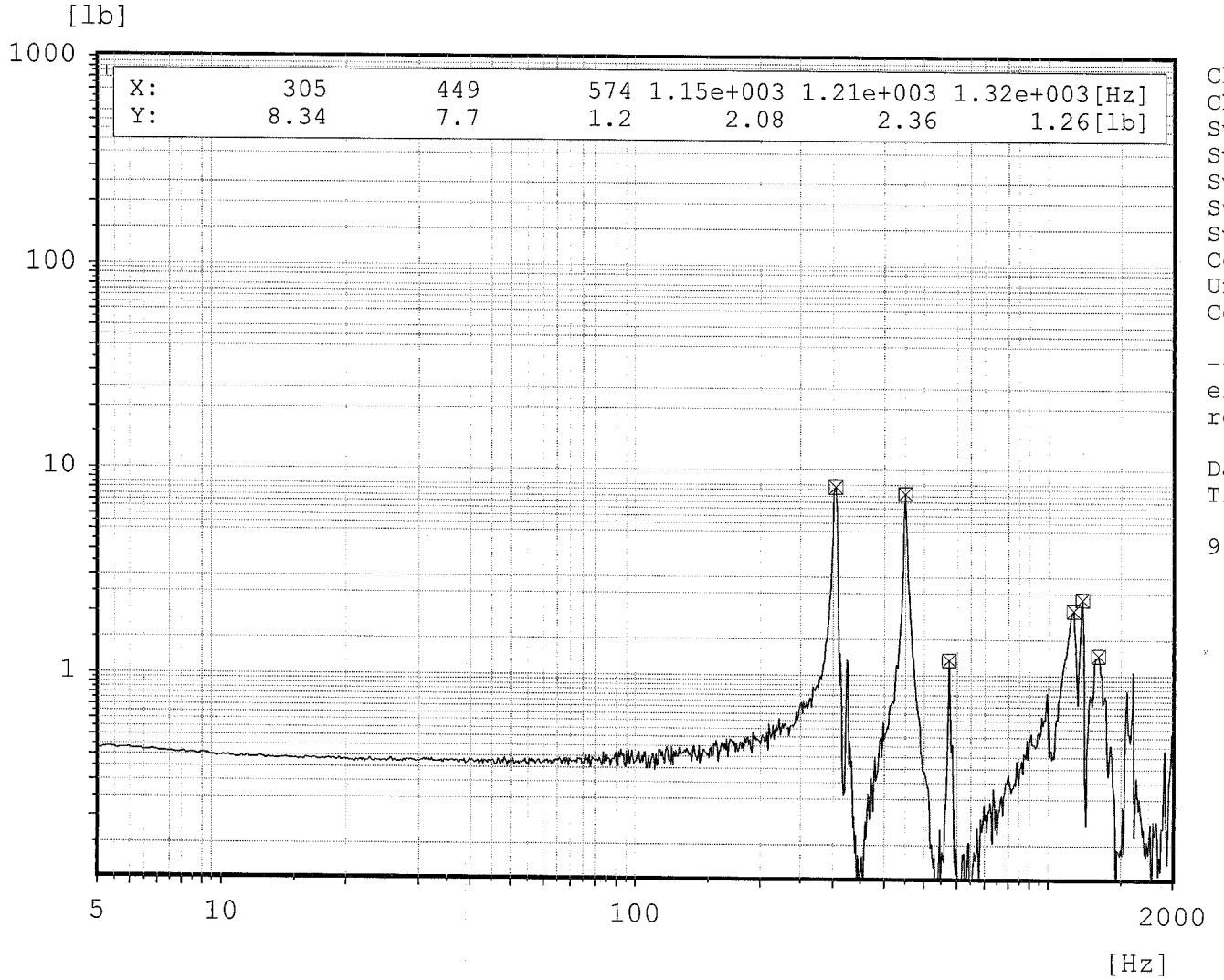

Chan.no: 5
Chan.type: W RMS
Sweep type: logarithmic
Sweeps done: 1
Sweeps req.: 1
Sweep direct.: up
Sweep rate: 4.00 Oct/min
Contr.strat.: Maximum
Unit: lb
Contr.strat.: Closed loop

-- Testing time --
elapsed: 000:02:09
remaining: 000:00:00

Date: 12-03-03
Time: 13:20:30

964#1/Amp #2/ M+P #1

Cold

C:\VcpNT\Daten\m+p\SPIRE\BDA\101403\101403 run 9 xax.rsn

Sine

101369, Run # 9, X axis

Spire BDA

P/N 10209800, S/N 009

Force Sum Y

After Shake, Cold

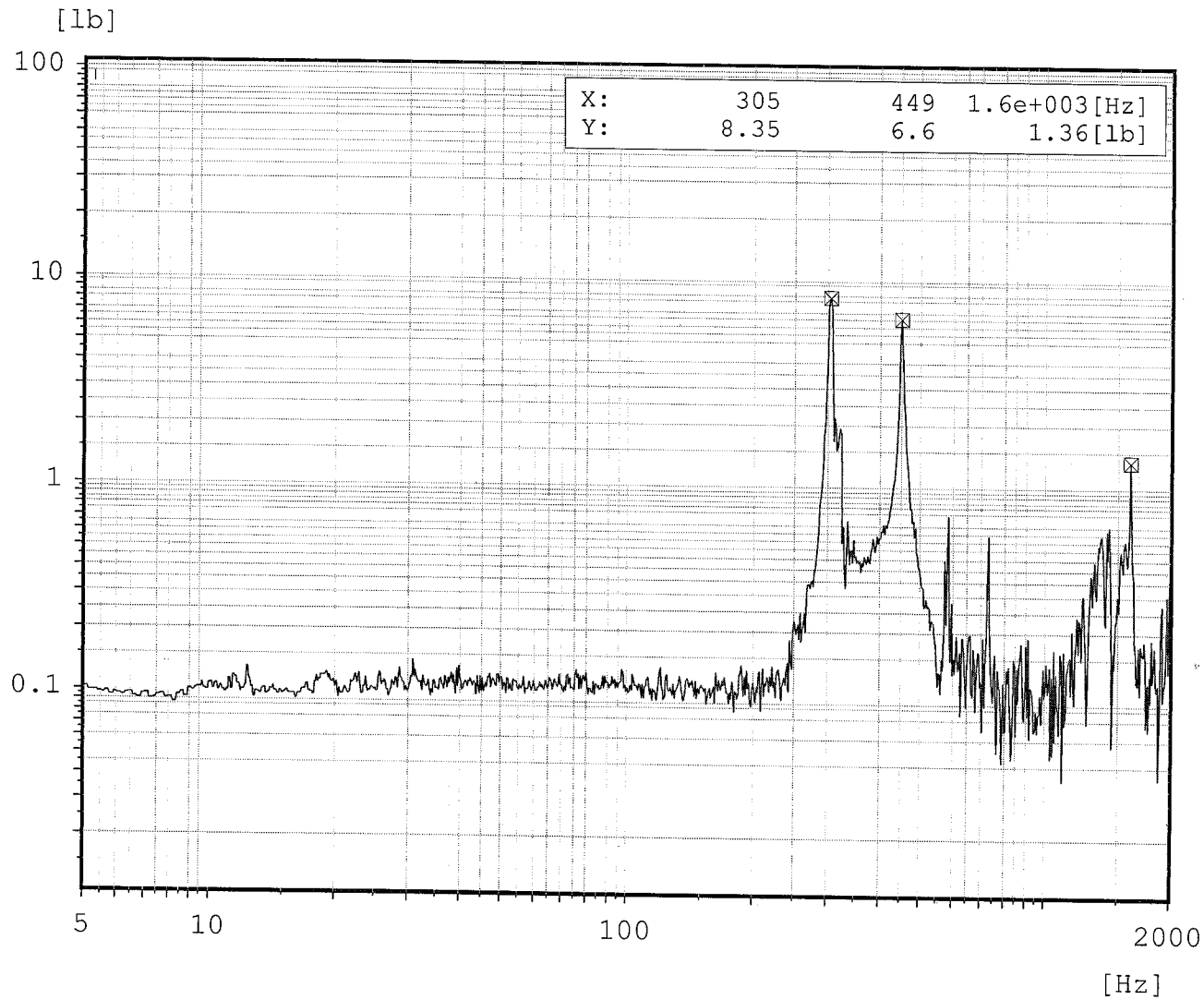

Chan.no: 6
Chan.type: W RMS
Sweep type: logarithmic
Sweeps done: 1
Sweeps req.: 1
Sweep direct.: up
Sweep rate: 4.00 Oct/min
Contr.strat.: Maximum
Unit: lb
Contr.strat.: Closed loop

-- Testing time --
elapsed: 000:02:09
remaining: 000:00:00

Date: 12-03-03
Time: 13:20:30

964#1/Amp #2/ M+P #1

Cold

C:\VcpNT\Daten\m+p\SPIRE\BDA\101403\101403 run 9 xax.rsn

PRELIMINARY

3/17/2004

PERFORMANCE VERIFICATION MATRIX - PFM SSW BDA - S/N 10209800-5-009

BDA Performance

Item	D. Value	Min Perf	Measured Median	Unit	Reference	Note
Number of bad optical pixels	= 4	= 9	1		BDA-PER-01	
(NEPphoton/NEPtotal)^2 (derived)	> 0.71	> 0.59	0.62		BDA-PER-02	at 30 mV bias
Optical efficiency*	> 0.7		0.70		BDA-PER-05	
Detector time constant	< 4.2	< 8	3.9	ms	BDA-PER-07	at 28 mV bias
Vmax***	< 17		14.8	mV	BDA-DRCU-22	
Calibration uniformity**	> 0.99	> 0.99	N/M		BDA-PER-08	
Cross-talk (n-n)**	< 0.01	< 0.05	N/M		BDA-PER-09	
Cross-talk (non n-n)**	< 0.001	< 0.001	N/M		BDA-PER-09	
1/f knee frequency	< 30	< 100	< 30	mHz	BDA-PER-10	at 21.2 mV bias
Average conducted heat load from 1.7 K	< 1.6	< 3.0		uW	BDA-TEC-06	

BDA Design Values (at 300 mK)

Item	Target	Measured Median	Unit	Reference	Note
R0	180.0	93.1	Ohms	BDA-SSSD	
Delta	41.8	42.0	K	BDA-SSSD	
R300	24.0	10.5	MOhms	BDA-SSSD	
G300	170.0	196.0	pW/K	BDA-SSSD	
Beta	1.50	1.29		BDA-SSSD	
C300	1.00	0.90	pJ/K	BDA-SSSD	
Rlr	10.0	8.4	MOhms	BDA-SSSD	room temp
Dark Sdc	4.1	2.9	e8 V/W	BDA-SSSD	at 21.2 mV bias
Dark NEP (1 Hz), incl 10 nV/rtHz amp. noise	5.5	6.9	e-17 W/rtHz	derived	at 21.2 mV bias
Dark NEP (0.1 Hz), incl 10 nV/rtHz amp. noise	5.5	8.1	e-17 W/rtHz	derived	at 21.2 mV bias
Vmax	10.3	11.6	mVrms	BDA-SSSD	SSSD value in error
BDA temperature rise from 1.7 K	< 10	< 7.2	mK	BDA-HCO-1	
BDA thermal time constant	~ 100	97	s	BDA-HCO-2	

*assumes νlower = 1.02 νcutoff

**not tested

***Thermistor values are not included

thermistors saturated at **31 & 69 mV** bias at **0.3 K**

PRELIMINARY

3/17/2004

Pixel Performance

Item	DV	MP							
BDA connector			J05	J05	J05	J05	J05	J05	J05
BDA pins			1,26	2,27	3,28	4,29	5,30	6,31	7,32
Channel ID			**1**	**2**	**3**	**4**	**5**	**6**	**7**
Detector ID			R1	A4	A3	A2	A1	DK1	B3
BDA Pixel Operability			Yes	Yes	Yes	Yes	Yes	Yes	Yes
BoDAC channel Operability	N/A	N/A	Yes	Yes	Yes	Yes	Yes	Yes	Yes
Noisy BoDAC channel	N/A	N/A	No	No	No	No	No	No	No
(NEPphoton/NEPtotal)^2 (derived)	> 0.60	> 0.50	N/M	0.61	0.62	0.61	0.63	0.57	0.63
Optical efficiency*	> 0.7	> 0.70	N/M	0.83	0.76	0.79	0.77	3.36	0.68
Detector time constant	< 4.2	< 14	N/M	5.36	5.36	5.00	2.13	2.32	4.08
Calibration uniformity**	> 0.99	> 0.99	N/A	N/A	N/A	N/A	N/A	N/A	N/A
Cross-talk (n-n)**	< 0.01	< 0.05	N/A	N/A	N/A	N/A	N/A	N/A	N/A
Cross-talk (non n-n)**	< 0.001	< 0.001	N/A	N/A	N/A	N/A	N/A	N/A	N/A
1/f knee frequency	< 30	< 100	< 30	< 30	< 30	33	< 30	< 30	< 30

Pixel Design Values

Item	Target							
R0	180.0	5.07E+06	58.71	74.76	134.48	103.11	103.5	111.64
Delta	41.8	0	43.44	42.14	37.62	40.28	37.99	39.81
G300	170	N/M	196.66	200.78	181.98	196.86	197.42	194.25
Beta	1.5	N/M	1.35	1.27	1.13	1.21	1.14	1.17
C300	1.00	N/M	0.57	0.87	1.01	1.88	1.10	0.47
Gamma	1 (fixed)	1.0	1.0	1.0	1.0	1.0	1.0	1.0
R300	24.1	N/M	9.9	10.5	9.8	11.1	8.0	11.2
Rlr+	10.0	8.5	8.63	8.41	8.48	8.74	8.61	8.52
Rlr-	10.0	8.36	8.44	8.36	8.56	8.38	8.48	8.59
Dark Sdc	2.2	N/M	2.8	2.8	2.8	2.9	2.5	2.9
Dark NEP (1 Hz), incl 9 nV/rtHz amp. noise	5.6	N/M	7.30	7.27	6.62	7.12	6.59	7.81
Dark NEP (0.1 Hz), incl 9 nV/rtHz amp. noise	5.6	N/M	8.51	7.64	7.52	8.18	11.63	10.49
Vmax	11.4	N/M	7.0	7.3	6.9	7.5	6.5	7.5

*assumes vlower = 1.02 vcutoff

**not tested

PRELIMINARY

3/17/2004

Pixel Performance										
Item										
BDA connector	J05	J05	J05	J05	J05	J05	J05	J05	J05	J05
BDA pins	8,33	9,34	10,35	11,36	12,37	13,38	14,39	15,40	16,41	17,42
Channel ID	**8**	**9**	**10**	**11**	**12**	**13**	**14**	**15**	**16**	**17**
Detector ID	B2	B1	C3	C2	C1	D3	D2	D1	E3	E2
BDA Pixel Operability	Yes	Yes	Yes	Yes	Yes	Yes	Yes	Yes	Yes	Yes
BoDAC channel Operability	Yes	Yes	Yes	Yes	Yes	Yes	Yes	Yes	Yes	Yes
Noisy BoDAC channel	No	No	No	No	No	No	No	No	No	No
(NEPphoton/NEPtotal)^2 (derived)	0.62	0.60	0.61	0.61	0.64	0.61	0.61	0.64	0.63	0.64
Optical efficiency*	0.76	0.80	0.69	0.68	0.69	0.66	0.69	0.69	0.65	0.65
Detector time constant	3.97	2.14	5.21	4.94	2.70	4.33	4.38	3.20	4.26	3.15
Calibration uniformity**	N/A	N/A	N/A	N/A	N/A	N/A	N/A	N/A	N/A	N/A
Cross-talk (n-n)**	N/A	N/A	N/A	N/A	N/A	N/A	N/A	N/A	N/A	N/A
Cross-talk (non n-n)**	N/A	N/A	N/A	N/A	N/A	N/A	N/A	N/A	N/A	N/A
1/f knee frequency	< 30	< 30	200	< 30	< 30	< 30	< 30	< 30	< 30	< 30
Pixel Design Values										
Item										
R0	99.9	35.13	49.01	102.14	156.23	80.66	47.41	154.14	85.27	74.88
Delta	40.25	47	44.62	39.65	37.95	40.91	44.88	37.99	41.71	43.19
G300	189.48	206.2	194.58	187.94	184.16	190.45	198.72	191.15	196.74	194.46
Beta	1.23	1.45	1.38	1.19	1.16	1.2	1.4	1.13	1.26	1.35
C300	0.56	0.69	0.69	0.69	1.61	1.61	1.14	0.82	1.25	0.90
Gamma	1.0	1.0	1.0	1.0	1.0	1.0	1.0	1.0	1.0	1.0
R300	10.7	9.6	9.7	10.0	12.0	9.5	9.7	11.9	11.3	12.2
Rlr+	8.8	8.6	8.72	8.84	8.2	8.68	8.65	8.7	8.64	8.92
Rlr-	8.48	8.44	8.64	8.56	8.41	8.64	8.56	8.41	8.44	8.04
Dark Sdc	2.9	2.8	2.8	2.8	3.0	3.5	2.8	3.0	2.9	3.0
Dark NEP (1 Hz), incl 9 nV/rtHz amp. noise	7.63	6.76	6.56	7.15	7.06	6.47	6.14	10.27	6.20	6.50
Dark NEP (0.1 Hz), incl 9 nV/rtHz amp. noise	8.64	6.88	6.96	8.44	8.27	11.60	7.33	10.76	7.32	7.21
Vmax	7.3	6.9	6.8	7.0	7.7	6.8	6.9	7.8	7.5	7.7
*assumes vlower = 1.02 vcutoff										
**not tested										

PRELIMINARY

3/17/2004

Pixel Performance										
Item										
BDA connector	J05	J05	J05	J05	J05	J05	J05	J06	J06	J06
BDA pins	18,43	19,44	20,45	21,46	22,47	23,48	24,49	7,32	8,33	9,34
Channel ID	**18**	**19**	**20**	**21**	**22**	**23**	**24**	**7**	**8**	**9**
Detector ID	E1	F3	F2	F1	G1	T1	G2	G3	G4	DK2
BDA Pixel Operability	Yes	Yes	Yes	Yes	Yes	Yes	Yes	Yes	Yes	Yes
BoDAC channel Operability	Yes	Yes	Yes	Yes	Yes	Yes	Yes	Yes	Yes	Yes
Noisy BoDAC channel	No	No	No	No	No	No	No	No	No	No
(NEPphoton/NEPtotal)^2 (derived)	0.63	0.68	0.70	0.60	0.72	N/M	0.62	0.60	0.62	0.58
Optical efficiency*	0.69	0.70	0.66	0.83	0.75	N/M	0.80	0.87	0.86	3.92
Detector time constant	3.19	4.18	1.92	3.04	1.87	N/M	1.61	4.05	4.96	3.97
Calibration uniformity**	N/A	N/A	N/A	N/A	N/A	N/A	N/A	N/A	N/A	N/A
Cross-talk (n-n)**	N/A	N/A	N/A	N/A	N/A	N/A	N/A	N/A	N/A	N/A
Cross-talk (non n-n)**	N/A	N/A	N/A	N/A	N/A	N/A	N/A	N/A	N/A	N/A
1/f knee frequency	< 30	< 30	< 30	< 30	< 30	< 30	< 30	< 30	< 30	< 30
Pixel Design Values										
Item										
R0	127.16	105.4	106.11	87.89	184.18	92.79	105.03	100.34	52.49	38.96
Delta	39.01	43.09	44.66	40.14	41.96	40.86	39.83	39.25	44.69	45.21
G300	185.74	196.02	195.03	187.32	187.55	N/M	188.76	185.39	190.73	220.69
Beta	1.18	1.36	1.36	1.19	1.31	N/M	1.18	1.16	1.39	1.42
C300	0.81	N/M	0.93	1.36	N/M	N/M	N/M	0.47	0.56	0.69
Gamma	1.0	N/M	1.0	1.0	1.0	1.0	1.0	1.0	1.0	1.0
R300	11.4	N/M	21.1	9.3	25.2	10.9	10.6	9.3	10.5	8.4
Rlr+	8.68	8.84	8.61	8.84	8.72	8.6	8.84	8.03	8.48	8.01
Rlr-	8.68	8.44	8.29	8.53	8.72	8.68	8.44	8.2	8.25	8.16
Dark Sdc	3.0	3.4	3.7	2.8	3.9	N/M	2.9	2.8	2.9	2.5
Dark NEP (1 Hz), incl 9 nV/rtHz amp. noise	8.61	6.50	6.68	6.94	6.13	N/M	6.95	7.69	6.98	9.18
Dark NEP (0.1 Hz), incl 9 nV/rtHz amp. noise	9.60	7.24	8.11	9.25	6.76	N/M	8.26	8.36	7.11	10.36
Vmax	7.5	9.1	10.0	6.7	11.0	N/M	7.2	6.7	7.0	6.7
*assumes vlower = 1.02 vcutoff										
**not tested										

PRELIMINARY

3/17/2004

Pixel Performance										
Item										
BDA connector	J06	J06	J06	J06	J06	J06	J06	J06	J06	J06
BDA pins	10,35	11,36	12,37	13,38	14,39	15,40	16,41	17,42	18,43	19,44
Channel ID	**10**	**11**	**12**	**13**	**14**	**15**	**16**	**17**	**18**	**19**
Detector ID	F5	F4	E6	E5	E4	D7	D6	D5	D4	C6
BDA Pixel Operability	Yes	Noisy	Yes	Yes	Yes	Yes	Yes	No	Yes	Yes
BoDAC channel Operability	Yes	Yes	Yes	Yes	Yes	Yes	No	Yes	Yes	Yes
Noisy BoDAC channel	No	No	No	No	No	No	No	No	No	No
(NEPphoton/NEPtotal)^2 (derived)	0.72	0.61	0.60	0.65	0.60	0.61	N/M	N/M	0.61	0.61
Optical efficiency*	0.68	0.67	0.75	0.69	0.80	0.81	N/M	N/M	0.64	0.84
Detector time constant	2.57	4.58	1.89	2.61	5.10	2.00	N/M	N/M	5.00	1.90
Calibration uniformity**	N/A	N/A	N/A	N/A	N/A	N/A	N/A	N/A	N/A	N/A
Cross-talk (n-n)**	N/A	N/A	N/A	N/A	N/A	N/A	N/A	N/A	N/A	N/A
Cross-talk (non n-n)**	N/A	N/A	N/A	N/A	N/A	N/A	N/A	N/A	N/A	N/A
1/f knee frequency	< 30	N/M	< 30	< 30	< 30	< 30	N/A	N/A	< 30	< 30
Pixel Design Values										
Item										
R0	214.6	75.39	66.32	93.09	56.22	46.28	N/M	N/M	118.5	71.26
Delta	41.34	42.06	41.98	42.64	43.34	45.31	N/M	N/M	38.5	42.14
G300	196.76	167.25	196.46	196.43	198.36	203.76	N/M	N/M	183.37	198.55
Beta	1.24	1.56	1.29	1.36	1.32	1.42	N/M	N/M	1.16	1.29
C300	0.69	0.69	1.61	1.61	1.14	0.82	1.25	0.90	0.81	N/M
Gamma	1.0	1.0	1.0	1.0	1.0	1.0	1.0	N/M	1.0	N/M
R300	26.9	10.5	9.1	14.0	9.3	10.1	N/M	N/M	9.9	N/M
Rlr+	8.08	8.48	8	8	8.06	8.07	8.04	8.12	8.28	8.13
Rlr-	8.28	8.14	8.17	8.18	8.16	8.19	8.26	8.19	8.28	8.24
Dark Sdc	3.9	3.0	2.7	3.2	2.7	2.8	N/M	N/M	2.8	2.8
Dark NEP (1 Hz), incl 9 nV/rtHz amp. noise	6.28	24.66	6.61	6.43	8.40	7.07	N/M	N/M	6.88	8.41
Dark NEP (0.1 Hz), incl 9 nV/rtHz amp. noise	6.30	28.70	7.72	7.12	9.91	7.21	N/M	N/M	7.01	9.74
Vmax	11.6	6.8	6.7	8.3	6.8	7.1	N/M	N/M	6.9	7.1
*assumes vlower = 1.02 vcutoff										
**not tested										

PRELIMINARY

3/17/2004

Pixel Performance								
Item						**Unit**	**Reference**	**Note**
BDA connector	J06	J06	J06	J06	J06			
BDA pins	20,45	21,46	22,47	23,48	24,49			
Channel ID	**20**	**21**	**22**	**23**	**24**			
Detector ID	C5	C4	B5	B4	T2			
BDA Pixel Operability	Yes	Yes	Yes	Yes	Yes			
BoDAC channel Operability	Yes	Yes	Yes	Yes	Yes			
Noisy BoDAC channel	No	No	No	No	No			
(NEPphoton/NEPtotal)^2 (derived)	0.64	0.61	0.68	0.64	N/M		BDA-PER-02	at 30 mV bias
Optical efficiency*	0.67	0.66	0.70	0.74	N/M		BDA-PER-05	
Detector time constant	3.07	4.34	3.88	3.94	N/M	ms	BDA-PER-07	at 28 mV bias
Calibration uniformity**	N/A	N/A	N/A	N/A	N/A		BDA-PER-08	
Cross-talk (n-n)**	N/A	N/A	N/A	N/A	N/A		BDA-PER-09	
Cross-talk (non n-n)**	N/A	N/A	N/A	N/A	N/A		BDA-PER-09	
1/f knee frequency	< 30	< 30	< 30	< 30	< 30	mHz	BDA-PER-10	at 21.2 mV bias
Pixel Design Values								
Item						**Unit**	**Reference**	**Note**
R0	68.28	42.92	95.29	94.79	121.32	Ohms	BDA-SSSD	
Delta	44.15	45.76	44.03	41.4	41.13	K	BDA-SSSD	
G300	199.82	207.48	198.52	198.73	N/M	pW/K	BDA-SSSD	
Beta	1.37	1.43	1.38	1.26	N/M		BDA-SSSD	
C300	0.93	1.36	N/M	N/M	N/M	pJ/K	BDA-SSSD	
Gamma	1.0	1.0	1.0	1.0	1.0			
R300	12.7	9.9	17.4	12.0	14.8	MOhms	BDA-SSSD	
Rlr+	8.12	8.12	8.64	8.29	8.2	MOhms	BDA-SSSD	room temp
Rlr-	8.24	8.28	8.29	8.3	8.32	MOhms	BDA-SSSD	room temp
Dark Sdc	3.1	2.8	3.4	3.0	N/M	e8 V/W	BDA-SSSD	at 21.2 mV bias
Dark NEP (1 Hz), incl 9 nV/rtHz amp. noise	6.92	7.61	5.90	6.82	N/M	e-17 W/rtHz	derived	at 21.2 mV bias
Dark NEP (0.1 Hz), incl 9 nV/rtHz amp. noise	7.15	8.19	6.45	7.37	N/M	e-17 W/rtHz	derived	at 21.2 mV bias
Vmax	7.9	7.1	9.2	7.8	N/M	mVrms	BDA-DRCU-22	
*assumes vlower = 1.02 vcutoff								
**not tested								

PRELIMINARY

3/17/2004

Symbol	Units	Value	Value	Value	Value	Value	Value	Value	Value	Value	Value
T0	K	0.3	Base Temperature								
Vn	nV/rtHz	10	Amplifier Voltage Noise								
Q	pW	0	Absorbed Power Onto Bolometer								
NEP_{photon}	1e-17 W/rtHz	0.00	Noise in Absorbed Optical Power								
Vbias	mV	21.2	Bias Across Bolometer & Load Resistors								
Detector ID		**Target**	**R1**	**A4**	**A3**	**A2**	**A1**	**DK1**	**B3**	**B2**	**B1**
Pthermal	pW	5.441	N/M	5.142	5.406	5.135	5.386	4.753	5.405	5.226	5.098
Pelec+Q	pW	5.440	N/M	5.142	5.406	5.135	5.386	4.753	5.405	5.226	5.098
Tbolo	K	0.32976	N/M	0.32475	0.32553	0.32685	0.32599	0.32306	0.32645	0.32617	0.32339
T/T0		1.099	N/M	1.083	1.085	1.090	1.087	1.077	1.088	1.087	1.078
Rbolo	Ω	1.40E+07	5.07E+06	6.19E+06	6.53E+06	6.14E+06	6.93E+06	5.30E+06	6.98E+06	6.67E+06	6.04E+06
Vbolo	mV	8.71	4.90	5.64	5.94	5.61	6.11	5.02	6.14	5.90	5.55
Ibolo	nA	0.62	0.97	0.91	0.91	0.91	0.88	0.95	0.88	0.89	0.92
A		-5.63	N/M	-5.78	-5.69	-5.36	-5.56	-5.42	-5.52	-5.55	-6.03
C	pJ/K	1.10	N/M	0.62	0.94	1.10	2.04	1.18	0.51	0.60	0.74
G	pW/K	195.9	N/M	218.9	222.7	200.5	217.7	214.8	214.4	210.0	229.9
Z/R		0.357	1.000	0.410	0.404	0.408	0.407	0.458	0.402	0.405	0.415
τ	ms	5.174	4.000	2.358	3.573	4.582	7.962	4.592	2.001	2.419	2.703
Sdc	V/W	4.12E+08	0.00E+00	2.82E+08	2.83E+08	2.82E+08	2.89E+08	2.50E+08	2.92E+08	2.91E+08	2.78E+08
$NEP_{johnson}$	1e-17 W/rtHz	2.099	N/M	2.295	2.324	2.290	2.334	2.479	2.315	2.289	2.308
NEP_{phonon}	1e-17 W/rtHz	3.174	N/M	3.352	3.388	3.227	3.355	3.328	3.333	3.294	3.426
NEP_{load}	1e-17 W/rtHz	0.880	N/M	0.773	0.802	0.763	0.824	0.837	0.813	0.786	0.777
NEP_{amp}	1e-17 W/rtHz	2.425	N/M	3.550	3.536	3.545	3.460	3.994	3.428	3.439	3.603
NEP_{det}	1e-17 W/rtHz	5.674	N/M	6.941	6.970	6.871	6.888	7.528	6.830	6.799	7.040
DQE		0.000	N/M	0.000	0.000	0.000	0.000	0.000	0.000	0.000	0.000
Vn(det)	nV/rtHz	23.4	12.89	19.6	19.7	19.4	19.9	18.8	19.9	19.8	19.5
Vn(total)	nV/rtHz	23.4	12.9	19.6	19.7	19.4	19.9	18.8	19.9	19.8	19.5
Vn(calculated)		19.7									
Vn(measured) at 1Hz		20.53	13.40	20.56	20.56	18.67	20.59	16.50	22.78	22.19	18.75
NEP(measured) at 1 Hz			N/M	7.30	7.27	6.62	7.12	6.59	7.81	7.63	6.76
Vn(measured) at 0.1 Hz			13.65	23.97	21.60	21.21	23.64	29.11	30.60	25.12	19.10
NEP(measured) at 0.1 Hz			N/M	8.51	7.64	7.52	8.18	11.63	10.49	8.64	6.88

PRELIMINARY

3/17/2004

Symbol	Units	Value	Value	Value	Value	Value	Value	Value	Value	Value	Value	Value
T0	K											
Vn	nV/rtHz											
Q	pW											
NEP_{photon}	1e-17 W/rtHz											
Vbias	mV											
Detector ID		**C3**	**C2**	**C1**	**D3**	**D2**	**D1**	**E3**	**E2**	**E1**	**F3**	**F2**
Pthermal	pW	4.980	5.054	5.701	4.971	5.053	5.519	5.413	5.584	5.311	6.019	6.438
Pelec+Q	pW	4.980	5.054	5.701	4.971	5.053	5.519	5.413	5.584	5.311	6.019	6.438
Tbolo	K	0.32423	0.32559	0.32929	0.32486	0.32406	0.32745	0.32607	0.32705	0.32714	0.32880	0.33083
T/T0		1.081	1.085	1.098	1.083	1.080	1.091	1.087	1.090	1.090	1.096	1.103
Rbolo	Ω	6.10E+06	6.34E+06	7.18E+06	6.03E+06	6.12E+06	7.34E+06	6.96E+06	7.33E+06	7.03E+06	9.87E+06	1.18E+07
Vbolo	mV	5.51	5.66	6.40	5.47	5.56	6.37	6.14	6.40	6.11	7.71	8.71
Ibolo	nA	0.90	0.89	0.89	0.91	0.91	0.87	0.88	0.87	0.87	0.78	0.74
A		-5.87	-5.52	-5.37	-5.61	-5.88	-5.39	-5.65	-5.75	-5.46	-5.72	-5.81
C	pJ/K	0.75	0.75	1.77	1.74	1.23	0.90	1.35	0.98	0.88	#VALUE!	1.02
G	pW/K	216.6	207.2	205.2	209.5	221.4	211.0	218.5	218.5	205.7	222.0	222.8
Z/R		0.413	0.415	0.377	0.419	0.414	0.398	0.399	0.380	0.398	0.359	0.327
τ	ms	2.870	3.031	7.302	6.944	4.626	3.619	5.244	3.791	3.631	#VALUE!	4.200
Sdc	V/W	2.84E+08	2.85E+08	3.01E+08	2.79E+08	2.81E+08	2.96E+08	2.93E+08	3.05E+08	2.98E+08	3.41E+08	3.71E+08
$NEP_{johnson}$	1e-17 W/rtHz	2.270	2.305	2.247	2.304	2.294	2.322	2.298	2.236	2.273	2.215	2.137
NEP_{phonon}	1e-17 W/rtHz	3.332	3.273	3.270	3.289	3.367	3.312	3.358	3.355	3.266	3.386	3.398
NEP_{load}	1e-17 W/rtHz	0.756	0.783	0.771	0.771	0.771	0.830	0.803	0.776	0.788	0.845	0.837
NEP_{amp}	1e-17 W/rtHz	3.523	3.515	3.324	3.579	3.558	3.376	3.412	3.280	3.352	2.935	2.695
NEP_{det}	1e-17 W/rtHz	6.882	6.875	6.639	6.946	6.954	6.777	6.812	6.631	6.687	6.319	6.050
DQE		0.000	0.000	0.000	0.000	0.000	0.000	0.000	0.000	0.000	0.000	0.000
Vn(det)	nV/rtHz	19.5	19.6	20.0	19.4	19.5	20.1	20.0	20.2	20.0	21.5	22.4
Vn(total)	nV/rtHz	19.5	19.6	20.0	19.4	19.5	20.1	20.0	20.2	20.0	21.5	22.4
Vn(calculated)												
Vn(measured) at 1Hz		18.62	20.35	21.25	18.09	17.27	30.42	18.16	19.82	25.69	22.14	24.79
NEP(measured) at 1 Hz		6.56	7.15	7.06	6.47	6.14	10.27	6.20	6.50	8.61	6.50	6.68
Vn(measured) at 0.1 Hz		19.76	24.01	24.87	32.42	20.59	31.87	21.45	21.97	28.65	24.66	30.10
NEP(measured) at 0.1 Hz		6.96	8.44	8.27	11.60	7.33	10.76	7.32	7.21	9.60	7.24	8.11

PRELIMINARY

3/17/2004

Symbol	Units	Value	Value	Value	Value	Value	Value	Value	Value	Value	Value	Value
T0	K											
Vn	nV/rtHz											
Q	pW											
NEP_{photon}	1e-17 W/rtHz											
Vbias	mV											
Detector ID		**F1**	**G1**	**T1**	**G2**	**G3**	**G4**	**DK2**	**F5**	**F4**	**E6**	**E5**
Pthermal	pW	4.898	6.371	N/M	5.205	5.335	5.352	5.220	6.853	5.307	5.334	6.180
Pelec+Q	pW	4.898	6.371	N/M	5.205	5.335	5.351	5.220	6.853	5.307	5.334	6.180
Tbolo	K	0.32491	0.33175	N/M	0.32622	0.32732	0.32642	0.32245	0.33261	0.32943	0.32572	0.32947
T/T0		1.083	1.106	N/M	1.087	1.091	1.088	1.075	1.109	1.098	1.086	1.098
Rbolo	Ω	5.90E+06	1.41E+07	N/M	6.61E+06	5.72E+06	6.33E+06	5.41E+06	1.49E+07	6.09E+06	5.65E+06	8.12E+06
Vbolo	mV	5.38	9.48	N/M	5.87	5.52	5.82	5.31	10.11	5.68	5.49	7.08
Ibolo	nA	0.91	0.67	N/M	0.89	0.97	0.92	0.98	0.68	0.93	0.97	0.87
A		-5.56	-5.62	N/M	-5.52	-5.48	-5.85	-5.92	-5.57	-5.65	-5.68	-5.69
C	pJ/K	1.47	#VALUE!	N/M	#VALUE!	0.51	0.60	0.74	0.77	0.76	1.75	1.77
G	pW/K	206.0	214.0	N/M	208.4	205.1	214.5	244.5	223.6	193.5	218.4	223.1
Z/R		0.422	0.329	N/M	0.405	0.394	0.382	0.437	0.321	0.360	0.403	0.353
				N/M								
τ	ms	5.957	#VALUE!	N/M	#VALUE!	2.047	2.343	2.537	3.341	3.214	6.640	6.840
Sdc	V/W	2.78E+08	3.94E+08	N/M	2.90E+08	2.76E+08	2.94E+08	2.50E+08	3.87E+08	3.03E+08	2.69E+08	3.15E+08
				N/M								
$NEP_{johnson}$	1e-17 W/rtHz	2.304	2.140	N/M	2.288	2.257	2.196	2.459	2.184	2.089	2.301	2.217
NEP_{phonon}	1e-17 W/rtHz	3.261	3.336	N/M	3.285	3.263	3.320	3.533	3.418	3.151	3.355	3.396
NEP_{load}	1e-17 W/rtHz	0.766	0.907	N/M	0.783	0.724	0.716	0.834	0.963	0.639	0.750	0.782
NEP_{amp}	1e-17 W/rtHz	3.602	2.537	N/M	3.448	3.628	3.405	3.998	2.583	3.304	3.713	3.175
NEP_{det}	1e-17 W/rtHz	6.955	5.899	N/M	6.802	6.944	6.699	7.611	6.035	6.427	7.110	6.538
DQE		0.000	0.000	N/M	0.000	0.000	0.000	0.000	0.000	0.000	0.000	0.000
				N/M								
				N/M								
Vn(det)	nV/rtHz	19.3	23.3	N/M	19.7	19.1	19.7	19.0	23.4	19.5	19.1	20.6
Vn(total)	nV/rtHz	19.3	23.3	N/M	19.7	19.1	19.7	19.0	23.4	19.5	19.1	20.6
Vn(calculated)												
Vn(measured) at 1Hz		19.26	24.15	19.05	20.16	21.20	20.50	22.95	24.31	74.62	17.81	20.25
NEP(measured) at 1 Hz		6.94	6.13	N/M	6.95	7.69	6.98	9.18	6.28	24.66	6.61	6.43
Vn(measured) at 0.1 Hz		25.68	26.64	21.72	23.97	23.03	20.89	25.92	24.37	86.86	20.78	22.43
NEP(measured) at 0.1 Hz		9.25	6.76	#VALUE!	8.26	8.36	7.11	10.36	6.30	28.70	7.72	7.12

PRELIMINARY

3/17/2004

Symbol	Units	Value	Value	Value	Value	Value	Value	Value	Value	Value		Value
T0	K											
Vn	nV/rtHz											
Q	pW											
NEP_{photon}	1e-17 W/rtHz											
Vbias	mV											
Detector ID		**E4**	**D7**	**D6**	**D5**	**D4**	**C6**	**C5**	**C4**	**B5**	**B4**	**T2**
Pthermal	pW	5.360	5.508	N/M	N/M	5.321	5.459	5.917	5.432	6.202	5.738	N/M
Pelec+Q	pW	5.360	5.508	N/M	N/M	5.321	5.459	5.917	5.432	6.202	5.738	N/M
Tbolo	K	0.32557	0.32548	N/M	N/M	0.32755	0.32602	0.32782	0.32471	0.32925	0.32730	N/M
T/T0		1.085	1.085	N/M	N/M	1.092	1.087	1.093	1.082	1.098	1.091	N/M
Rbolo	Ω	5.76E+06	6.16E+06	N/M	N/M	6.06E+06	6.17E+06	7.49E+06	6.14E+06	1.00E+07	7.26E+06	N/M
Vbolo	mV	5.56	5.82	N/M	N/M	5.68	5.80	6.66	5.78	7.89	6.46	N/M
Ibolo	nA	0.96	0.95	N/M	N/M	0.94	0.94	0.89	0.94	0.79	0.89	N/M
A		-5.77	-5.90	N/M	N/M	-5.42	-5.68	-5.80	-5.94	-5.78	-5.62	N/M
C	pJ/K	1.23	0.89	N/M	N/M	0.88	#VALUE!	1.01	1.47	#VALUE!	#VALUE!	N/M
G	pW/K	221.0	228.8	N/M	N/M	203.0	221.0	225.6	232.3	225.7	221.8	N/M
Z/R		0.399	0.392	N/M	N/M	0.395	0.398	0.366	0.401	0.349	0.385	N/M
				N/M	N/M							N/M
τ	ms	4.628	3.250	N/M	N/M	3.625	#VALUE!	3.820	5.304	#VALUE!	#VALUE!	N/M
Sdc	V/W	2.73E+08	2.80E+08	N/M	N/M	2.82E+08	2.78E+08	3.05E+08	2.77E+08	3.43E+08	2.96E+08	N/M
				N/M	N/M							N/M
$NEP_{johnson}$	1e-17 W/rtHz	2.284	2.280	N/M	N/M	2.261	2.302	2.229	2.309	2.200	2.290	N/M
NEP_{phonon}	1e-17 W/rtHz	3.372	3.425	N/M	N/M	3.247	3.376	3.410	3.449	3.414	3.387	N/M
NEP_{load}	1e-17 W/rtHz	0.745	0.759	N/M	N/M	0.741	0.772	0.773	0.778	0.837	0.806	N/M
NEP_{amp}	1e-17 W/rtHz	3.663	3.575	N/M	N/M	3.546	3.594	3.274	3.613	2.916	3.374	N/M
NEP_{det}	1e-17 W/rtHz	7.053	6.988	N/M	N/M	6.857	7.001	6.649	7.062	6.304	6.785	N/M
DQE		0.000	0.000	N/M	N/M	0.000	0.000	0.000	0.000	0.000	0.000	N/M
												N/M
												N/M
Vn(det)	nV/rtHz	19.3	19.5	N/M	N/M	19.3	19.5	20.3	19.5	21.6	20.1	N/M
Vn(total)	nV/rtHz	19.3	19.5	N/M	N/M	19.3	19.5	20.3	19.5	21.6	20.1	N/M
Vn(calculated)												N/M
Vn(measured) at 1Hz		22.94	19.77	20.81	N/M	19.39	23.41	21.13	21.06	20.22	20.20	20.07
NEP(measured) at 1 Hz		8.40	7.07	N/M	N/M	6.88	8.41	6.92	7.61	5.90	6.82	N/M
Vn(measured) at 0.1 Hz		27.06	20.16	22.81	N/M	19.78	27.11	21.85	22.68	22.13	21.84	23.48
NEP(measured) at 0.1 Hz		9.91	7.21	#VALUE!	#VALUE!	7.01	9.74	7.15	8.19	6.45	7.37	

PRELIMINARY

Symbol	Units	Equation (or Comments)	
T0	K		
Vn	nV/rtHz		
Q	pW		
NEP_{photon}	1e-17 W/rtHz		
Vbias	mV		
Detector ID			
Pthermal	pW	Power as function of Temperature	$P_{thermal} = [G300/(1+\beta)][T/0.3]^{\beta}T$ evaluated from To to Tb
Pelec+Q	pW	Electrical + Absorbed Power	$P_e + Q = [V_{bias}/(2R_L + R_B)]^2R_B + Q$
Tbolo	K	Bolometer Temperature	Solve for Tb using Newtonian recursion such that $P_{thermal} = P_e + Q$
T/T0			T/To = Tbolo/To
Rbolo	Ω	Bolometer Resistance	$Rbolo = (Ro)\exp[(\Delta/Tb)^{1/2}]$
Vbolo	mV	Voltage across Bolometer	$Vbolo = [Vbias/(2R_L + R_B)]R_B$
Ibolo	nA	Current through Bolometer	$Ibolo = Vbias/(2R_L + R_B)$
A			$A = (T/R)(dR/dT) = -(1/2)[(\Delta/Tb)^{1/2}]$
C	pJ/K	Dynamic Heat Capacity	$C = C300[(T/0.3)^{\gamma}]$
G	pW/K	Dynamic Thermal Conductance	$G = G300[(T/0.3)^{\beta}]$
Z/R			$Z/R = (I/V)(dV/dI) = [-1 - GTb/(P_eA)] / [1 - GTb/(P_eA)]$
τ	ms	Electrical Time Constant	$\tau = [C/2G][(Z/R + 1)(1 + 2R_L/R_B)] / [Z/R + 2R_L/R_B]$
Sdc	V/W	Electrical Responsivity at 0 Hz	$Sdc = (1/2)[R_B/P_e]^{1/2} [1 - Z/R] / [1 + (Z/R)(R_B/2R_L)$
$NEP_{johnson}$	1e-17 W/rtHz	Johnson Noise Prior to Demodulation	$NEP_{johnson} = [(4k(Tb)^3G^2)/(P_eA^2)]^{1/2}$
NEP_{phonon}	1e-17 W/rtHz	Phonon Noise Prior to Demodulation	$=\{[(4kTo^2G)(\beta+1)((T/To)^{2\beta+3}-1)]/[(2\beta+3)(T/To)^{\beta}((T/To)^{\beta+1}-1)]\}^{1/2}$
NEP_{load}	1e-17 W/rtHz	Johnson Noise from R_L Prior to Demod.	$NEP_{load} = [4kTo/2R_L]^{1/2} \lvert 2(Z/R)R_B Ibolo/[(Z/R) - 1]\rvert$
NEP_{amp}	1e-17 W/rtHz	Amplifier Noise Prior to Demodulation	$NEP_{amp} = Vn / Sdc$
NEP_{det}	1e-17 W/rtHz	Detector Noise after Demodulation	$NEP_{det} = [2NEP_{john}^2+NEP_{phon}^2+2NEP_{load}^2+2NEP_{amp}^2]^{1/2}$
DQE		BLIP Figure-of-Merit for Detector	$DQE = NEP_{photon}^2 / (NEP_{photon}^2 + NEP_{det}^2)$
Vn(det)	nV/rtHz	Voltage Noise of Detector After Demod.	$Vn(det) = NEP_{det}Sdc$
Vn(total)	nV/rtHz	Total Noise after Demodulation	$Vn(total) = [NEP_{det}^2 + NEP_{photon}^2]^{1/2}Sdc$
Vn(calculated)			
Vn(measured) at 1Hz			
NEP(measured) at 1 Hz			
Vn(measured) at 0.1 Hz			
NEP(measured) at 0.1 Hz			

PRELIMINARY

3/17/2004

Symbol	Units	Value	Value	Value	Value	Value	Value	Value	Value	Value	Value	Value	Value	Value
T0	K	0.3	Base Temperature											
Vn	nV/rtHz	10	Amplifier Voltage Noise											
Q	pW	10.8	Absorbed Power Onto Bolometer											
NEP_{photon}	1e-17 W/rtHz	13.60	Noise in Absorbed Optical Power											
Vbias	mV	30	Bias Across Bolometer & Load Resistors											
			Detector ID											
		Target	**R1**	**A4**	**A3**	**A2**	**A1**	**DK1**	**B3**	**B2**	**B1**	**C3**	**C2**	**C1**
Pthermal	pW	18.594	N/M	17.172	17.669	17.139	17.706	16.619	17.719	17.363	17.097	16.876	17.056	18.168
Pelec+Q	pW	18.594	N/M	17.172	17.669	17.139	17.706	16.619	17.719	17.363	17.097	16.877	17.056	18.168
Tbolo	K	0.38875	0.30000	0.37449	0.37563	0.38152	0.37759	0.37374	0.37890	0.37869	0.37049	0.37382	0.37838	0.38462
T/T0		1.296	1.000	1.248	1.252	1.272	1.259	1.246	1.263	1.262	1.235	1.246	1.261	1.282
Rbolo	Ω	5.74E+06	N/M	2.79E+06	2.98E+06	2.76E+06	3.15E+06	2.47E+06	3.16E+06	3.00E+06	2.74E+06	2.72E+06	2.85E+06	3.22E+06
Vbolo	mV	6.69	N/M	4.22	4.52	4.18	4.67	3.79	4.67	4.44	4.15	4.07	4.22	4.87
Ibolo	nA	1.17	N/M	1.51	1.52	1.52	1.48	1.53	1.48	1.48	1.52	1.49	1.48	1.51
A		-5.18	N/M	-5.39	-5.30	-4.96	-5.16	-5.04	-5.13	-5.15	-5.63	-5.46	-5.12	-4.97
C	pJ/K	1.30	N/M	0.71	1.09	1.28	2.37	1.36	0.59	0.70	0.85	0.86	0.87	2.06
G	pW/K	250.8	N/M	265.3	267.1	238.8	260.0	253.6	255.3	252.3	280.0	263.6	247.7	245.7
Z/R		0.414	N/M	0.487	0.468	0.486	0.467	0.527	0.463	0.477	0.491	0.496	0.491	0.442
τ	ms	4.000	N/M	2.149	3.254	4.307	7.278	4.369	1.837	2.222	2.440	2.619	2.821	6.660
Sdc	V/K	2.25E+08	N/M	1.57E+08	1.62E+08	1.57E+08	1.66E+08	1.43E+08	1.67E+08	1.63E+08	1.56E+08	1.57E+08	1.59E+08	1.70E+08
$NEP_{johnson}$	1e-17 W/rtHz	3.120	N/M	3.323	3.292	3.344	3.303	3.541	3.281	3.309	3.320	3.324	3.346	3.229
NEP_{phonon}	1e-17 W/rtHz	3.797	N/M	3.868	3.897	3.730	3.863	3.809	3.839	3.807	3.942	3.848	3.776	3.792
NEP_{load}	1e-17 W/rtHz	0.859	N/M	0.788	0.790	0.781	0.805	0.834	0.795	0.792	0.788	0.782	0.794	0.769
NEP_{amp}	1e-17 W/rtHz	4.450	N/M	6.351	6.184	6.365	6.031	6.984	5.990	6.127	6.424	6.390	6.286	5.883
NEP_{det}	1e-17 W/rtHz	8.658	N/M	10.907	10.705	10.888	10.526	11.769	10.454	10.617	11.016	10.945	10.814	10.279
DQE		0.712	N/M	0.609	0.617	0.609	0.625	0.572	0.629	0.621	0.604	0.607	0.613	0.636
Vn(det)	nV/rtHz	19.5	12.8	17.2	17.3	17.1	17.5	16.9	17.5	17.3	17.1	17.1	17.2	17.5
Vn(total)	nV/rtHz	36.2	12.8	27.4	28.0	27.4	28.5	25.8	28.6	28.2	27.2	27.3	27.6	29.0
			14.4	21.7	16.7	13.0	19.1	19.0	18.9	17.6	18.6	26.9	19.7	22.3
Measured														
Q_incident	1.16E-11													
NEP_photon	9.69E-17													
Q_absorbed			N/M	N/M	8.7775E-12	N/A	8.91797E-12	3.90782E-11	7.93444E-12	8.81383E-12	9.24833E-12	8.03767E-12	7.86212E-12	8.04434E-12
NEP_photon			N/M	N/M	8.4213E-17	N/A	8.4884E-17	1.77689E-16	8.00665E-17	8.43869E-17	8.6442E-17	8.05857E-17	7.97008E-17	8.06191E-17
Vn(total, gain = 57300)			0.0012333	0.00208137	0.0013961	N/A	0.001645615	0.00159327	0.001588958	0.001467292	0.001561383	0.001751086	0.001630229	0.001908874
Vn(total)		2.8585E-08	1.52195E-08	3.6324E-08	2.4365E-08	N/A	2.87193E-08	2.78058E-08	2.77305E-08	2.56072E-08	2.72493E-08	3.056E-08	2.84508E-08	3.33137E-08
Sdc			N/M	N/M	1.62E+08	N/A	1.81E+08	1.68E+08	1.69E+08	1.64E+08	1.75E+08	2.18E+08	1.78E+08	2.05E+08
NEP(total)					1.5011E-16	N/A	1.58817E-16	1.65579E-16	1.64367E-16	1.55905E-16	1.55514E-16	1.39877E-16	1.6027E-16	1.62547E-16
DQE		0.25	N/M	N/M	0.31	N/A	0.29	1.15	0.24	0.29	0.31	0.33	0.25	0.25

PRELIMINARY

Symbol	Units	Value	Value	Value	Value	Value	Value	Value	Value	Value	Value	Value	Value	Value	Value	Value
T0	K															
Vn	nV/rtHz															
Q	pW															
NEP_{photon}	1e-17 W/rtHz															
Vbias	mV															
		D3	**D2**	**D1**	**E3**	**E2**	**E1**	**F3**	**F2**	**F1**	**G1**	**T1**	**G2**	**G3**	**G4**	**DK2**
Pthermal	pW	16.877	17.024	17.972	17.717	17.992	17.532	19.137	20.159	16.749	20.490	#VALUE!	17.314	17.352	17.415	17.358
Pelec+Q	pW	16.877	17.024	17.972	17.717	17.993	17.532	19.137	20.159	16.749	20.490	#VALUE!	17.314	17.352	17.415	17.358
Tbolo	K	0.37667	0.37288	0.38140	0.37725	0.37832	0.38122	0.38193	0.38603	0.37736	0.39074	#VALUE!	0.37920	0.38080	0.37709	0.36753
T/T0		1.256	1.243	1.271	1.258	1.261	1.271	1.273	1.287	1.258	1.302	#VALUE!	1.264	1.269	1.257	1.225
Rbolo	Ω	2.71E+06	2.76E+06	3.33E+06	3.14E+06	3.27E+06	3.14E+06	4.32E+06	4.98E+06	2.65E+06	5.83E+06	#VALUE!	2.97E+06	2.57E+06	2.81E+06	2.55E+06
Vbolo	mV	4.06	4.14	4.89	4.66	4.85	4.60	6.00	6.83	3.97	7.52	#VALUE!	4.40	4.11	4.31	4.09
Ibolo	nA	1.50	1.50	1.47	1.48	1.48	1.46	1.39	1.37	1.50	1.29	#VALUE!	1.48	1.60	1.54	1.60
A		-5.21	-5.49	-4.99	-5.26	-5.34	-5.06	-5.31	-5.38	-5.16	-5.18	#VALUE!	-5.12	-5.08	-5.44	-5.55
C	pJ/K	2.02	1.41	1.04	1.57	1.13	1.03	#VALUE!	1.19	1.71	#VALUE!	#VALUE!	#VALUE!	0.59	0.70	0.85
G	pW/K	250.3	269.4	250.7	262.6	266.0	246.4	272.2	274.8	246.1	265.1	#VALUE!	248.9	244.5	262.1	294.4
Z/R		0.497	0.493	0.455	0.463	0.447	0.468	0.403	0.356	0.503	0.347	#VALUE!	0.477	0.474	0.466	0.497
τ	ms	6.488	4.202	3.320	4.758	3.372	3.338	#VALUE!	3.441	5.592	#VALUE!	#VALUE!	#VALUE!	1.917	2.113	2.307
Sdc	V/K	1.56E+08	1.56E+08	1.70E+08	1.67E+08	1.72E+08	1.68E+08	1.95E+08	2.12E+08	1.54E+08	2.27E+08	#VALUE!	1.63E+08	1.53E+08	1.61E+08	1.46E+08
$NEP_{johnson}$	1e-17 W/rtHz	3.346	3.331	3.283	3.269	3.209	3.284	3.113	2.976	3.370	2.983	#VALUE!	3.301	3.285	3.221	3.432
NEP_{phonon}	1e-17 W/rtHz	3.787	3.884	3.822	3.873	3.889	3.780	3.948	3.985	3.760	3.943	#VALUE!	3.790	3.767	3.849	4.034
NEP_{load}	1e-17 W/rtHz	0.784	0.789	0.804	0.792	0.776	0.790	0.792	0.748	0.786	0.779	#VALUE!	0.786	0.746	0.748	0.818
NEP_{amp}	1e-17 W/rtHz	6.420	6.392	5.867	5.995	5.829	5.966	5.118	4.709	6.499	4.407	#VALUE!	6.136	6.517	6.200	6.869
NEP_{det}	1e-17 W/rtHz	10.973	10.965	10.310	10.465	10.241	10.406	9.414	8.892	11.071	8.568	#VALUE!	10.616	11.037	10.657	11.642
DQE		0.606	0.606	0.635	0.628	0.638	0.631	0.676	0.701	0.601	0.716	#VALUE!	0.621	0.603	0.620	0.577
Vn(det)	nV/rtHz	17.1	17.2	17.6	17.5	17.6	17.4	18.4	18.9	17.0	19.4	#VALUE!	17.3	16.9	17.2	16.9
Vn(total)	nV/rtHz	27.2	27.3	29.1	28.6	29.2	28.7	32.3	34.5	27.0	36.5	#VALUE!	28.1	26.9	27.9	26.1
		19.7	21.0	26.5	21.2	20.0	29.2	7.0	24.4	25.7	18.4	18.6	17.3	25.7	25.7	25.7
Measured																
Q_incident	1.16E-11															
NEP_photon	9.69E-17															
Q_absorbed		7.72354E-12	7.99489E-12	8.06379E-12	7.57873E-12	7.60366E-12	7.99215E-12	N/A	7.715E-12	9.68E-12	8.741E-12	8.585E-12	N/A	1.016E-11	1.002E-11	4.554E-11
NEP_photon		7.89953E-17	8.03709E-17	8.07165E-17	7.82512E-17	7.83798E-17	8.03572E-17	N/A	7.895E-17	8.844E-17	8.404E-17	8.328E-17	N/A	9.058E-17	8.999E-17	1.918E-16
Vn(total, gain = 57300)		0.001672062	0.001806447	0.002212419	0.001843819	0.003067526	0.001578476	N/A	0.0021829	0.0024331	0.0015758	0.0015971	0.0015366	0.0024331	0.0024331	0.0024331
Vn(total)		2.91808E-08	3.15261E-08	3.86112E-08	3.21783E-08	5.35345E-08	2.75476E-08	N/A	3.81E-08	4.246E-08	2.75E-08	2.787E-08	2.682E-08	4.246E-08	4.246E-08	4.246E-08
Sdc		1.72E+08	2.03E+08	1.74E+08	2.00E+08	1.68E+08	1.74E+08	N/M	2.34E+08	1.75E+08	1.67E+08	1.61E+08	N/M	1.75E+08	1.75E+08	1.75E+08
NEP(total)		1.69769E-16	1.54939E-16	2.22E-16	1.60983E-16	3.18569E-16	1.58073E-16	N/M	1.63E-16	2.424E-16	1.645E-16	1.735E-16	N/M	2.424E-16	2.424E-16	2.424E-16
DQE		0.22	0.27	0.13	0.24	0.06	0.26	N/M	0.23	0.13	0.26	0.23	N/M	0.14	0.14	0.63

PRELIMINARY

Symbol	Units	Value	Value	Value	Value	Value	Value	Value	Value	Value	Value	Value	Value	Value	Value	
T0	K															
Vn	nV/rtHz															
Q	pW															
NEP_{photon}	1e-17 W/rtHz															
Vbias	mV															
		F5	**F4**	**E6**	**E5**	**E4**	**D7**	**D6**	**D5**	**D4**	**C6**	**C5**	**C4**	**B5**	**B4**	**T2**
Pthermal	pW	21.729	17.227	17.400	19.115	17.437	17.737	#VALUE!	#VALUE!	17.392	17.678	18.563	17.646	19.476	18.294	N/M
Pelec+Q	pW	21.729	17.227	17.400	19.115	17.438	17.737	#VALUE!	#VALUE!	17.392	17.678	18.563	17.646	19.476	18.294	N/M
Tbolo	K	0.39238	0.38381	0.37589	0.38170	0.37516	0.37375	#VALUE!	#VALUE!	0.38175	0.37624	0.37842	0.37221	0.38209	0.37875	N/M
T/T0		1.308	1.279	1.253	1.272	1.251	1.246	#VALUE!	#VALUE!	1.272	1.254	1.261	1.241	1.274	1.262	N/M
Rbolo	Ω	6.16E+06	2.65E+06	2.58E+06	3.62E+06	2.62E+06	2.80E+06	#VALUE!	#VALUE!	2.72E+06	2.81E+06	3.35E+06	2.81E+06	4.38E+06	3.29E+06	N/M
Vbolo	mV	8.20	4.13	4.12	5.49	4.17	4.41	#VALUE!	#VALUE!	4.24	4.40	5.10	4.38	6.16	4.97	N/M
Ibolo	nA	1.33	1.56	1.60	1.51	1.59	1.57	#VALUE!	#VALUE!	1.56	1.56	1.52	1.56	1.41	1.51	N/M
A		-5.13	-5.23	-5.28	-5.28	-5.37	-5.51	#VALUE!	#VALUE!	-5.02	-5.29	-5.40	-5.54	-5.37	-5.23	N/M
C	pJ/K	0.90	0.88	2.02	2.05	1.42	1.02	#VALUE!	#VALUE!	1.03	#VALUE!	1.17	1.69	#VALUE!	#VALUE!	N/M
G	pW/K	274.5	245.6	262.8	272.6	266.5	278.4	#VALUE!	#VALUE!	242.5	265.9	274.7	282.4	277.2	266.6	N/M
Z/R		0.315	0.474	0.478	0.406	0.474	0.463	#VALUE!	#VALUE!	0.473	0.466	0.425	0.469	0.389	0.441	N/M
																N/M
τ	ms	2.660	2.855	6.112	5.928	4.235	2.914	#VALUE!	#VALUE!	3.382	#VALUE!	3.355	4.758	#VALUE!	#VALUE!	N/M
Sdc	V/K	2.30E+08	1.57E+08	1.52E+08	1.80E+08	1.53E+08	1.58E+08	#VALUE!	#VALUE!	1.57E+08	1.58E+08	1.74E+08	1.57E+08	1.97E+08	1.70E+08	N/M
																N/M
$NEP_{johnson}$	1e-17 W/rtHz	2.954	3.270	3.315	3.134	3.286	3.259	#VALUE!	#VALUE!	3.296	3.285	3.157	3.285	3.077	3.226	N/M
NEP_{phonon}	1e-17 W/rtHz	4.032	3.729	3.864	3.950	3.883	3.948	#VALUE!	#VALUE!	3.755	3.888	3.949	3.969	3.982	3.908	N/M
NEP_{load}	1e-17 W/rtHz	0.759	0.743	0.765	0.759	0.759	0.767	#VALUE!	#VALUE!	0.761	0.774	0.759	0.779	0.777	0.783	N/M
NEP_{amp}	1e-17 W/rtHz	4.352	6.367	6.600	5.566	6.519	6.330	#VALUE!	#VALUE!	6.367	6.333	5.756	6.361	5.074	5.870	N/M
NEP_{det}	1e-17 W/rtHz	8.529	10.839	11.189	9.917	11.082	10.869	#VALUE!	#VALUE!	10.866	10.868	10.146	10.931	9.353	10.307	N/M
DQE		0.718	0.612	0.596	0.653	0.601	0.610	#VALUE!	#VALUE!	0.610	0.610	0.642	0.608	0.679	0.635	N/M
																N/M
Vn(det)	nV/rtHz	19.6	17.0	17.0	17.8	17.0	17.2	#VALUE!	#VALUE!	17.1	17.2	17.6	17.2	18.4	17.6	N/M
Vn(total)	nV/rtHz	36.9	27.3	26.7	30.2	26.9	27.5	#VALUE!	#VALUE!	27.3	27.5	29.5	27.4	32.5	29.1	N/M
		25.7	25.7	25.7	25.7	25.7	25.7	25.7	25.7	25.7	25.7	25.7	25.7	25.7	25.7	
Measured																
Q_incident	1.16E-11															
NEP_photon	9.69E-17															
Q_absorbed		7.918E-12	7.742E-12	8.694E-12	8.004E-12	9.263E-12	9.415E-12	#VALUE!	#VALUE!	7.44E-12	9.741E-12	7.823E-12	7.713E-12	8.132E-12	8.585E-12	
NEP_photon		7.998E-17	7.909E-17	8.381E-17	8.042E-17	8.651E-17	8.722E-17	#VALUE!	#VALUE!	7.753E-17	8.872E-17	7.95E-17	7.894E-17	8.106E-17	8.328E-17	
Vn(total, gain = 57300)		0.0024331	0.0024331	0.0024331	0.0024331	0.0024331	0.0024331	0.0024331	0.0024331	0.0024331	0.0024331	0.0024331	0.0024331	0.0024331	0.0024331	
Vn(total)		4.246E-08	4.246E-08	4.246E-08	4.246E-08	4.246E-08	4.246E-08	4.246E-08	4.246E-08	4.246E-08	4.246E-08	4.246E-08	4.246E-08	4.246E-08	4.246E-08	
Sdc		1.75E+08	1.75E+08	1.75E+08	1.75E+08	1.75E+08	1.75E+08	1.75E+08	1.75E+08	1.75E+08	1.75E+08	1.75E+08	1.75E+08	1.75E+08	1.75E+08	
NEP(total)		2.424E-16	2.424E-16	2.424E-16	2.424E-16	2.424E-16	2.424E-16	2.424E-16	2.424E-16	2.424E-16	2.424E-16	2.424E-16	2.424E-16	2.424E-16	2.424E-16	
DQE		0.11	0.11	0.12	0.11	0.13	0.13	#VALUE!	#VALUE!	0.10	0.13	0.11	0.11	0.11	0.12	

PRELIMINARY

Symbol	Units	Equation (or Comments)	
T0	K		
Vn	nV/rtHz		
Q	pW		
NEP_{photon}	1e-17 W/rtHz		
Vbias	mV		
Pthermal	pW	Power as function of Temperature	$P_{thermal} = [G300/(1+\beta)][T/0.3]^{\beta}T$ evaluated from To to Tb
Pelec+Q	pW	Electrical + Absorbed Power	$P_e + Q = [V_{bias}/(2R_L + R_B)]^2R_B + Q$
Tbolo	K	Bolometer Temperature	Solve for Tb using Newtonian recursion such that $P_{thermal} = P_e + Q$
T/T0			T/To = Tbolo/To
Rbolo	Ω	Bolometer Resistance	$Rbolo = (Ro)\exp[(\Delta/Tb)^{1/2}]$
Vbolo	mV	Voltage across Bolometer	$Vbolo = [Vbias/(2R_L + R_B)]R_B$
Ibolo	nA	Current through Bolometer	$Ibolo = Vbias/(2R_L + R_B)$
A			$A = (T/R)(dR/dT) = -(1/2)[(\Delta/Tb)^{1/2}]$
C	pJ/K	Dynamic Heat Capacity	$C = C300[(T/0.3)^{\gamma}]$
G	pW/K	Dynamic Thermal Conductance	$G = G300[(T/0.3)^{\beta}]$
Z/R			$Z/R = (I/V)(dV/dI) = [-1 - GTb/(P_eA)] / [1 - GTb/(P_eA)]$
τ	ms	Electrical Time Constant	$\tau = [C/2G][(Z/R + 1)(1 + 2R_L/R_B)] / [Z/R + 2R_L/R_B]$
Sdc	V/K	Electrical Responsivity at 0 Hz	$Sdc = (1/2)[R_B/P_e]^{1/2} [1 - Z/R] / [1 + (Z/R)(R_B/2R_L)$
$NEP_{johnson}$	1e-17 W/rtHz	Johnson Noise Prior to Demodulation	$NEP_{johnson} = [(4k(Tb)^3G^2)/(P_eA^2)]^{1/2}$
NEP_{phonon}	1e-17 W/rtHz	Phonon Noise Prior to Demodulation	$=\{[(4kTo^2G)(\beta+1)((T/To)^{2\beta+3}-1)]/[(2\beta+3)(T/To)^{\beta}((T/To)^{\beta+1}-1)]\}^{1/2}$
NEP_{load}	1e-17 W/rtHz	Johnson Noise from R_L Prior to Demod.	$NEP_{load} = [4kTo/2R_L]^{1/2} \lvert 2(Z/R)R_BIbolo/[(Z/R) - 1]\rvert$
NEP_{amp}	1e-17 W/rtHz	Amplifier Noise Prior to Demodulation	$NEP_{amp} = Vn / Sdc$
NEP_{det}	1e-17 W/rtHz	Detector Noise after Demodulation	$NEP_{det} = [2NEP_{john}^2+NEP_{phon}^2+2NEP_{load}^2+2NEP_{amp}^2]^{1/2}$
DQE		BLIP Figure-of-Merit for Detector	$DQE = NEP_{photon}^2 / (NEP_{photon}^2 + NEP_{det}^2)$
Vn(det)	nV/rtHz	Voltage Noise of Detector After Demod.	$Vn(det) = NEP_{det}Sdc$
Vn(total)	nV/rtHz	Total Noise after Demodulation	$Vn(total) = [NEP_{det}^2 + NEP_{photon}^2]^{1/2}Sdc$
Measured			
Q_incident	1.16E-11		
NEP_photon	9.69E-17		
Q_absorbed			
NEP_photon			
Vn(total, gain = 57300)			
Vn(total)			
Sdc			
NEP(total)			
DQE			

EIDP Coverpage For QM PLW BDA

Unit Identfication								
Name	:	QM PLW BDA						
Part #	:	10209800 -8						
S/N	:	#007						

Environmemtal Testing							
	Axes Tested	Temperature	Duration or Number of Cycles	Pass/Fail	Requirement	Source	Waiver #
Random Vibration Test	X, Y, Z	100 K	2 min per axis	P	X, Y, Z at 90 K 1 min per axis	SSSD Sec # 3.4	HR-SP-JPL-RFW-006
High Level Sine Vibe Test	None	NA	NA	NA	X, Y, Z at 90 K	SSSD Sec # 3.4	HR-SP-JPL-RFW-005
Bakeout	NA	80 C	5 days as part of the assembly procedures	P	None (other than as part of the assembly procedure)	D-20549	
Thermal Cycles	NA	RoomT to ~ < 10 K	27	P	Min15 from RmT to < 77 K	D-20549	

Other Testing							
	Frequency (Hz)		Note		Minimum Performance	Source	Waiver #
Lowest Resonant Frequency (X-axis)	283 Hz		Cold		> 200 Hz (Goal: >250 Hz)	SSSD Sec # 3.1.3	NA
Lowest Resonant Frequency (Y-axis)	281 Hz		Cold		> 200 Hz (Goal: >250 Hz)	SSSD Sec # 3.1.3	NA
Lowest Resonant Frequency (Z-axis)	276 Hz		Cold		> 200 Hz (Goal: >250 Hz)	SSSD Sec # 3.1.3	NA
Metrology Measurements were performed before and after the Vibration Test and the Thermal Cycles							
	Motion in X/Y	Motion in Z		Meets Goal ?	Performance Goal	Source	Waiver #
Maximum motion due to Random Vibration Test 1st axis (X)	21 μm	40 μm		Y	125 μm in X/Y and 500 μm in Z	SSSD Sec # 3.1.1	NA
Maximum motion due to Random Vibration Test 2nd axis (Y)	22 μm	8.6 μm		Y	125 μm in X/Y and 500 μm in Z	SSSD Sec # 3.1.1	NA
Maximum motion due to Random Vibration Test 3rd axis (Z)	9.5 μm	11 μm		Y	125 μm in X/Y and 500 μm in Z	SSSD Sec # 3.1.1	NA
Cumulative Maximum motion	34 μm	56 μm		Y	125 μm in X/Y and 500 μm in Z	SSSD Sec # 3.1.1	NA
Cold Continuity Measurements : In Process							
				Pass/Fail	Requirement	Source	Waiver #
Cold Continuity Test (1st Thermal Cycle)				P	None	NA	NA
Cold Continuity Test (2nd Thermal Cycle)				P	None	NA	NA

QM BDA Random Vibration Test

P/N 10209800-8

S/N 007

X-axis Shake, Cold, Sine Surveys (Before and After 0 dB Random Vibe)

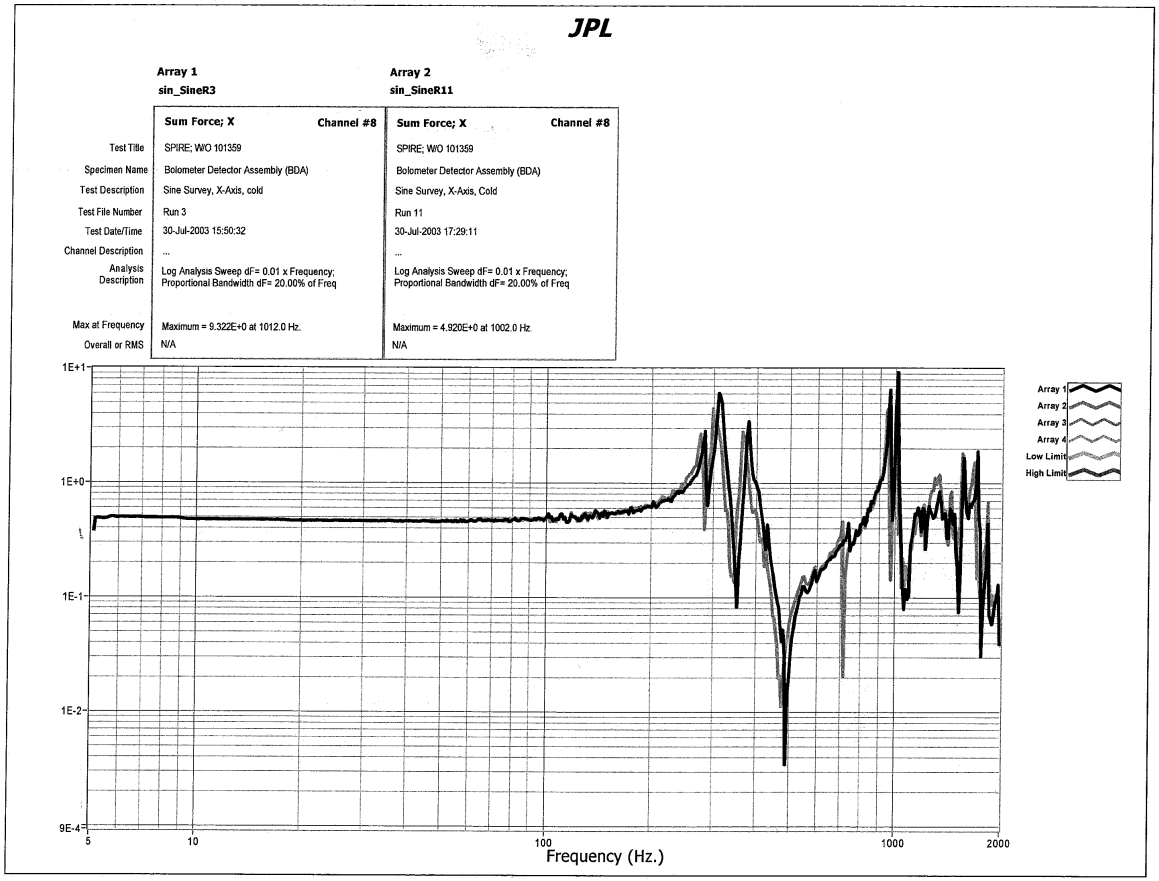

Y-axis Shake, Cold, Sine Surveys (Before and After 0 dB Random Vibe)

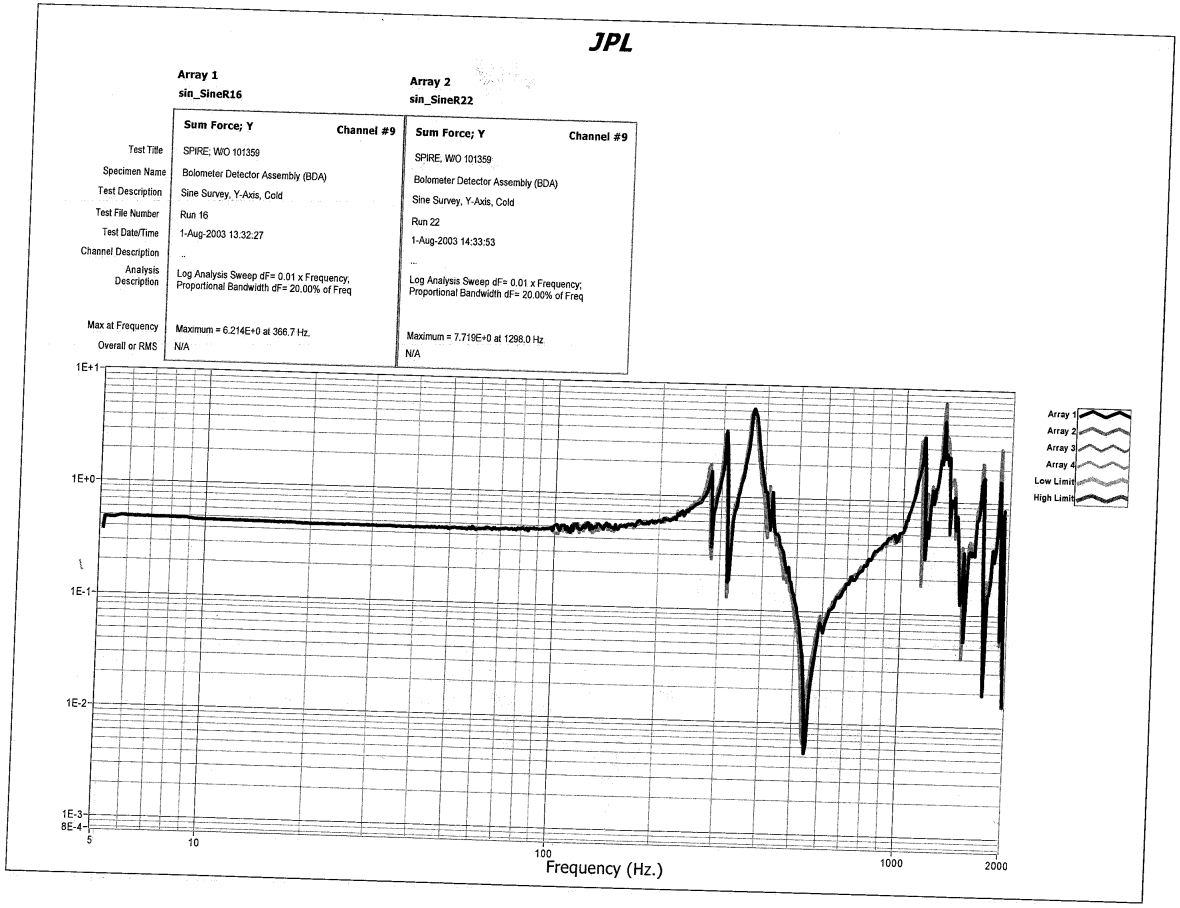

Z-axis Shake, Cold, Sine Surveys (Before and After 0 dB Random Vibe)

JPL

	Array 1 sin_SineR29	Array 2 sin_SineR35
	Sum Force; Z — Channel #10	Sum Force; Z — Channel #10
Test Title	SPIRE; W/O 101359	SPIRE; W/O 101359
Specimen Name	Bolometer Detector Assembly (BDA)	Bolometer Detector Assembly (BDA)
Test Description	Sine Survey, Z-Axis, Cold	Sine Survey, Z-Axis, Cold
Test File Number	Run 29	Run 35
Test Date/Time	5-Aug-2003 14:4:51	5-Aug-2003 15:21:46
Channel Description	...	..
Analysis Description	Log Analysis Sweep dF= 0.01 x Frequency; Proportional Bandwidth dF= 20.00% of Freq	Log Analysis Sweep dF= 0.01 x Frequency; Proportional Bandwidth dF= 20.00% of Freq
Max at Frequency	Maximum = 1.077E+1 at 465.6 Hz.	Maximum = 1.048E+1 at 456.5 Hz.
Overall or RMS	N/A	N/A

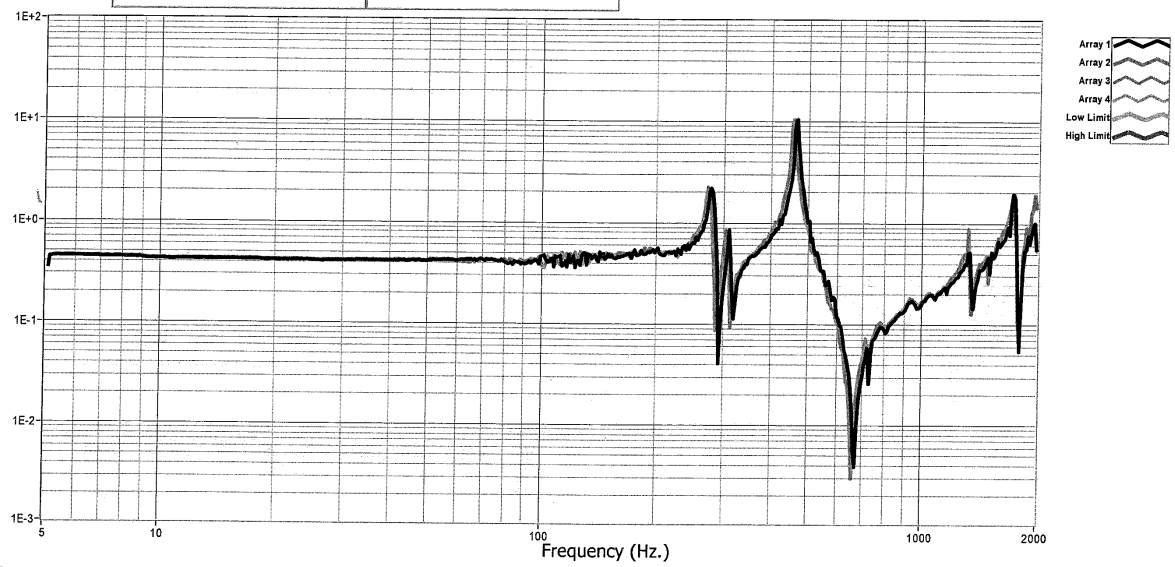

Hardware ID PFM SSW BDA, 10209800-5 S/N 009

Date	Time	AIDS	Power	Mate	Demate	Transport	Notes
							Assembly Process Connector Mates
6-Oct-2003		240322		J06	J06		kapton cable test
12-Nov-2003		241072		J05+J06	J05+J06		kapton cable test
17-Nov-2003		241072		J05+J06	J05+J06		Load resistor test
22-Nov-2003		241072		J05+J06	J05+J06		detector test, before feehorn installation
26-Nov-2003		241072		J05+J06	J05+J06		detector test, after feedhorn installation
							Assembly Complete
28-Nov-2003		241129		J05+J06	J05+J06		assembly complete electical test (pre-bakeout)
28-Nov-2003		241129				x	103 -> MDL -> 103, for optical metrology
28-Nov-2003		241129					Filter installation, staking epoxy cure (66C, 3hrs)
29-Nov-2003		241129				x	103 -> bld 306 for Vacuum Bakeout (80C, 24 hrs, 10^-5 torr)
1-Dec-2003		241129				x	bld 306 -> 103-109D
2-Dec-2003		241129		J05+J06	J05+J06		post-bakeout, pre-vibe electrical test
2-Dec-2003		241129				x	103-109D -> bld 170, for pre-vibe metrology
2-Dec-2003		241158				x	170 -> 183 for shake prep.
2-Dec-2003		241158				x	183 -> 144 (shake lab)
2-Dec-2003		241158					pump / vent (for RmT pre-shake tests)
3-Dec-2003		241158					pump / cool to LN2 / **Shake Test** / warm / vent
4-Dec-2003		241158					pump / vent (for RmT post-shake tests)
4-Dec-2003		241158				x	144 -> 183, for removal from shake fixture
4-Dec-2003		241158				x	183 -> 170, for metrology
4-Dec-2003		241129				x	170 -> 103-109D
4-Dec-2003		241129		J05	J05		post-vibe electrical test
4-Dec-2003		241129		J06	J06		
5-Dec-2003						x	103 -> 183 for performance testing
5-Dec-2003		241200		J05+J06			Installation into BODAC test facility
5-Dec-2003		241200					pump
6-Dec-2003		241200					cooldown (RmT -> 77K -> 4K)
interim							Performance Testing

Hardware ID PFM SSW BDA, 10209800-5 S/N 009

Date	Time	AIDS	Power	Mate	Demate	Transport	Notes
30-Dec-2003		241431					warmup (date of reaching RmT)
30-Dec-2003		241431					vent
30-Dec-2003		241431			J05+J06		remove from BODAC
4-Jan-2004		241452				x	183 -> 170 -> 183, for metrology
4-Jan-2004		241452		J05+J06			installation in thermal cycle facility
4-Jan-2004		241452					pump out
6-Jan-2004		241452					Thermal cycle RmT -> 4K -> RmT
8-Jan-2004		241452					vent
8-Jan-2004		241452			J05+J06		
8-Jan-2004		241452				x	183 -> 170 -> 183, for metrology
9-Jan-2004		240611		J05+J06			install in thermal cycle facility
9-Jan-2004		240611					pump out
12-Jan-2004		240611					Thermal cycle RmT -> 4K -> RmT
16-Jan-2004		240611					vent
16-Jan-2004		240611			J05+J06		
16-Jan-2004		240611				x	183 -> 170, for metrology -> 103
27-Jan-2004		241612					Final ink-stamping (& 103-109D Dry Box storage)
6-Feb-2004						x	103 -> 183 for additional testing
12-Feb-2004		241825		J05+J06			2nd Installation into BODAC
12-Feb-2004		241825					pump
13-Feb-2004		241825					cooldown (RmT -> 77K -> 4K)
interim							Performance Testing
3-Mar-2004		242169					warmup (date of reaching RmT)
10-Mar-2004		242169					vent
10-Mar-2004		242169			J05+J06		Removal from BODAC

REVISIONS

LTR	ZONE	DESCRIPTION	CODE	DWN	CHK	STRUCT	MATL	THRM CONT			ENGR	DSGN SUPV	DATA MGT	RELEASE DATE
A		INITIAL RELEASE	CODE B	SEE TITLE BLOCK									RTN	12/7/01
B		UPDATED: MASS & CG'S, FILTER SHAPE,VOLUME NEED AROUND CAPSTANS, CONN. POSITIONS. REMOVED MODES AND MASS PARTICIPATION; ROTATED PIXEL MAP 180'.	B											

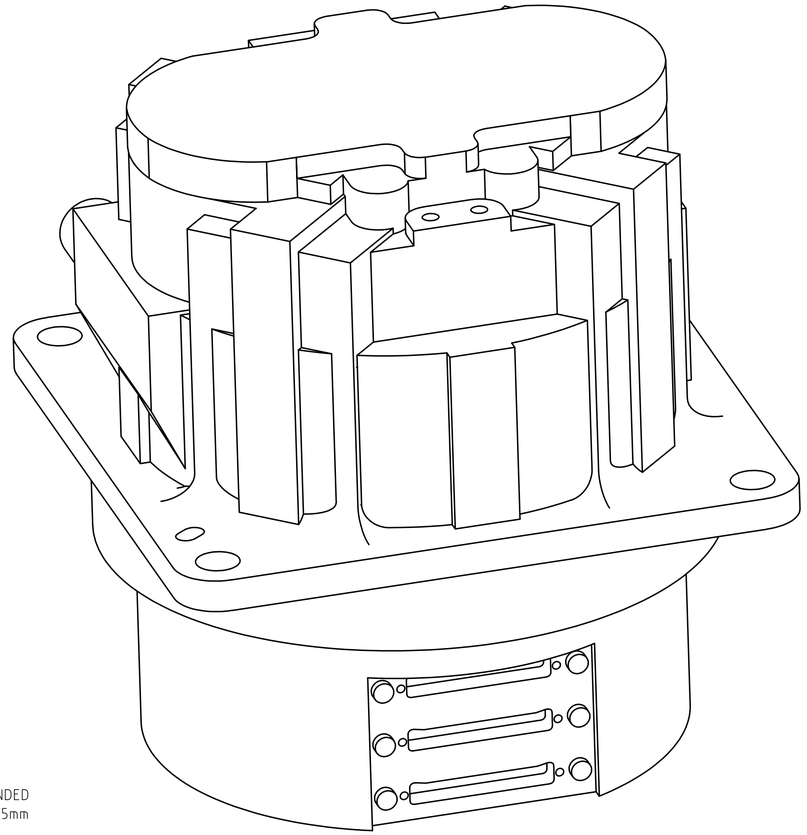

GENERAL VIEW
REFERENCE ONLY

9. ALL DIMENSIONS SHOWN FOR THE 300mK STAGE ARE FOR THE NOMINAL SUSPENDED POSITION. THE SUSPENDED UNIT MAY BE SHIFTED FROM NOMINAL POSITION ±0,5mm IN ANY AXIS.

8. ONLY PIXELS, DOWEL PIN HOLES, AND SLOTS VISIBLE. ALL OTHER FEATURES OMITTED FOR CLARITY.

7. FOR PHOTOMETER AND SPECTROMETER SUBSYSTEM INTERFACE DATA AND LAYOUT CONFIGURATION, SEE SHEETS 5-7.

6. DIMENSIONS IN {} ARE CALCULATED FOR OPERATING TEMPERATURE AND ARE PROVIDED FOR REFRENCE ONLY. ALL OTHED DIMENSIONS ARE BASED ON AN ASSEMBLY TEMPERATURE OF 20° C.

5. INDICATES CONNECTOR POSITION. CONNECTORS INSTALLED ARE NANONIC STM 051 M6SN.

4. REFER TO TABLES ON SHEETS 5, 6, AND 7 FOR DIFFERENCES BETWEEN DETECTOR ARRAYS.

3. ASSEMBLY REFERENCE DESIGNATOR, TITLE, PART NUMBER, REVISION LETTER, AND SERIAL NUMBER TO APPEAR AS SHOWN IN THIS AREA.

2. THIS IS THE INTERFACE CONTROL DRAWING FOR THE BOLOMETER DETECTOR ARRAY, JPL PART NUMBER 10209800. JPL DRAWING NUMBER 10209800 SHALL CONTAIN THE FOLLOWING NOTE: THIS ASSEMBLY MEETS THE INTERFACE REQUIREMENTS OF JPL INTERFACE CONTROL DRAWING 10209721.

1. THIS TECHNICAL DATA IS EXPORT CONTROLLED UNDER U.S. LAW AND IS BEING TRANSFERRED BY JPL TO PPARC PURSUANT TO THE NASA / PPARC LETTER OF AGREEMENT WHICH ENTERED INTO FORCE ON DECEMBER 2, 1999. THIS TECHNICAL DATA IS TRANSFERRED TO PPARC FOR USE EXCLUSIVELY ON THE NASA/PPARC SPIRE ON FIRST COOPERATIVE PROJECT, MAY NOT BE USED FOR ANY OTHER PURPOSE, AND SHALL NOT BE RE-TRANSFERRED OR DISCLOSED TO ANY OTHER PARTY WITHOUT THE PRIOR WRITTEN APPROVAL OF NASA.

NOTES: UNLESS OTHERWISE SPECIFIED

INTERFACE DRAWING

QTY REQD	ITEM NO	REF DES	CAGE NO	PART OR IDENTIFYING NO	NOMENCLATURE OR DESCRIPTION	SPECIFICATION	MATERIAL OR NOTE	ZONE

PARTS LIST

MATERIAL

METRIC

THIRD ANGLE PROJECTION

NEXT ASSEMBLY	USED ON
	SPIRE

APPLICATION

UNLESS OTHERWISE SPECIFIED
DIMENSIONS ARE IN MILLIMETERS

LINEAR TOLERANCES:

0–6	± 0.1
OVER 6–30	± 0.2
OVER 30–120	± 0.3
OVER 120–315	± 0.5
OVER 315–1000	± 0.8
OVER 1000	± 1.2

ANGULAR TOLERANCES:
± 0.5°

MACHINE FINISH (MICROMETERS) 32

DO NOT SCALE DRAWING

INTERPRET DWG PER ASME Y14.100M

CONTRACT NO 960939

APPD		DATE
DWN	D CRUMB	11/9/01
CHK	B BURDICK	11/14/01
STRUCT	K BROWNING	11/19/01
MATL	M KNOPP	11/19/01
THRM CONT		
MSSL	A. J. COKER	11/7/01
	G. LILENTHAL	12/13/01
ENGR	L. HUSTED	11/19/01
DSGN SUPV		

JET PROPULSION LABORATORY
CALIFORNIA INSTITUTE OF TECHNOLOGY
PASADENA, CA 91109

RELEASED THROUGH EDMG

BOLOMETER DETECTOR ARRAY, MECHANICAL ID, SPIRE

SIZE	CAGE NO		REV
A1	23835	10209721	B

SCALE NONE | UNCLASSIFIED | SHEET 1 OF 7

REV 2/00

A1 10209721

AutoCAD GENERATED

REVISIONS

LTR	ZONE	DESCRIPTION	CODE	DWN	CHK	STRUCT	MATL	THRM CONT		ENGR	DSGN SUPV	DATA MGT	RELEASE DATE
A		INITIAL RELEASE	CODE B	SEE TITLE BLOCK								RTN	12/7/01
B		UPDATED: MASS & CG'S, FILTER SHAPE,VOLUME NEED AROUND CAPSTANS, CONN. POSITIONS. REMOVED MODES AND MASS PARTICIPATION; ROTATED PIXEL MAP 180°	B										

I CONFIRM THAT THE CHANGES DETAILED IN THIS ISSUE (B) OF THE JPL BDA INTERFACE DRAWING ARE ACCEPTABLE TO MSSL.

Jeff Coker 21st FEB 2003

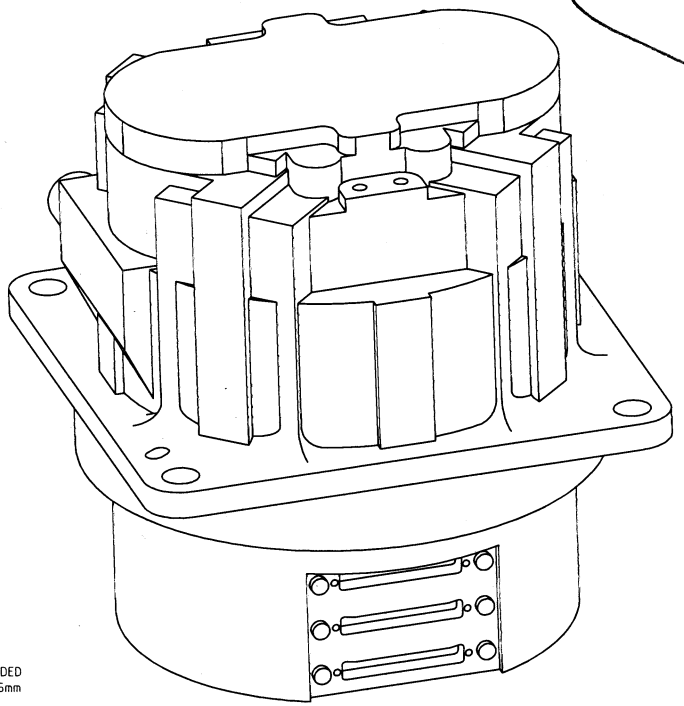

GENERAL VIEW
REFERENCE ONLY

9. ALL DIMENSIONS SHOWN FOR THE 300mK STAGE ARE FOR THE NOMINAL SUSPENDED POSITION. THE SUSPENDED UNIT MAY BE SHIFTED FROM NOMINAL POSITION ±0,5mm IN ANY AXIS.

8. ONLY PIXELS, DOWEL PIN HOLES, AND SLOTS VISIBLE. ALL OTHER FEATURES OMITTED FOR CLARITY.

7. FOR PHOTOMETER AND SPECTROMETER SUBSYSTEM INTERFACE DATA AND LAYOUT CONFIGURATION, SEE SHEETS 5-7.

6. DIMENSIONS IN {} ARE CALCULATED FOR OPERATING TEMPERATURE AND ARE PROVIDED FOR REFRENCE ONLY. ALL OTHED DIMENSIONS ARE BASED ON AN ASSEMBLY TEMPERATURE OF 20° C.

5. INDICATES CONNECTOR POSITION. CONNECTORS INSTALLED ARE NANONIC STM 051 M6SN.

4. REFER TO TABLES ON SHEETS 5, 6, AND 7 FOR DIFFERENCES BETWEEN DETECTOR ARRAYS.

3. ASSEMBLY REFERENCE DESIGNATOR, TITLE, PART NUMBER, REVISION LETTER, AND SERIAL NUMBER TO APPEAR AS SHOWN IN THIS AREA.

2. THIS IS THE INTERFACE CONTROL DRAWING FOR THE BOLOMETER DETECTOR ARRAY, JPL PART NUMBER 10209800. JPL DRAWING NUMBER 10209800 SHALL CONTAIN THE FOLLOWING NOTE: THIS ASSEMBLY MEETS THE INTERFACE REQUIREMENTS OF JPL INTERFACE CONTROL DRAWING 10209721.

1. THIS TECHNICAL DATA IS EXPORT CONTROLLED UNDER U.S. LAW AND IS BEING TRANSFERRED BY JPL TO PPARC PURSUANT TO THE NASA / PPARC LETTER OF AGREEMENT WHICH ENTERED INTO FORCE ON DECEMBER 2, 1999. THIS TECHNICAL DATA IS TRANSFERRED TO PPARC FOR USE EXCLUSIVELY ON THE NASA/PPARC SPIRE ON FIRST COOPERATIVE PROJECT, MAY NOT BE USED FOR ANY OTHER PURPOSE, AND SHALL NOT BE RE-TRANSFERRED OR DISCLOSED TO ANY OTHER PARTY WITHOUT THE PRIOR WRITTEN APPROVAL OF NASA.

NOTES: UNLESS OTHERWISE SPECIFIED

INTERFACE DRAWING

QTY REQD	ITEM NO	REF DES	CAGE NO	PART OR IDENTIFYING NO	NOMENCLATURE OR DESCRIPTION	SPECIFICATION	MATERIAL OR NOTE	ZONE

PARTS LIST

MATERIAL

METRIC

THIRD ANGLE PROJECTION

NEXT ASSEMBLY	USED ON
	SPIRE

APPLICATION

UNLESS OTHERWISE SPECIFIED
DIMENSIONS ARE IN MILLIMETERS
LINEAR TOLERANCES:
0–6 ± 0.1
OVER 6–30 ± 0.2
OVER 30–120 ± 0.3
OVER 120–315 ± 0.5
OVER 315–1000 ± 0.8
OVER 1000 ± 1.2
ANGULAR TOLERANCES: ± 0.5°
MACHINE FINISH (MICROMETERS) 3.2
DO NOT SCALE DRAWING
INTERPRET DWG PER ASME Y14.100M

CONTRACT NO 960929

APPD		DATE
DWN	D CRUMB	11/9/01
CHK	B BURDICK	11/14/01
STRUCT	K BROWNING	11/19/01
MATL	M KNOPP	11/19/01
THRM CONT		
MSSL	A. J. COKER	11/7/01
	G. LILENTHAL	12/13/01
ENGR	L. HUSTED	11/19/01
DSGN SUPV		

JET PROPULSION LABORATORY
CALIFORNIA INSTITUTE OF TECHNOLOGY
PASADENA, CA 91109

RELEASED THROUGH EDMS

BOLOMETER DETECTOR ARRAY, MECHANICAL ID, SPIRE

SIZE	CAGE NO		REV
A1	23835	10209721	B
SCALE NONE		UNCLASSIFIED	SHEET 1 OF 7

REV 2/00

A1 10209721

AutoCAD GENERATED

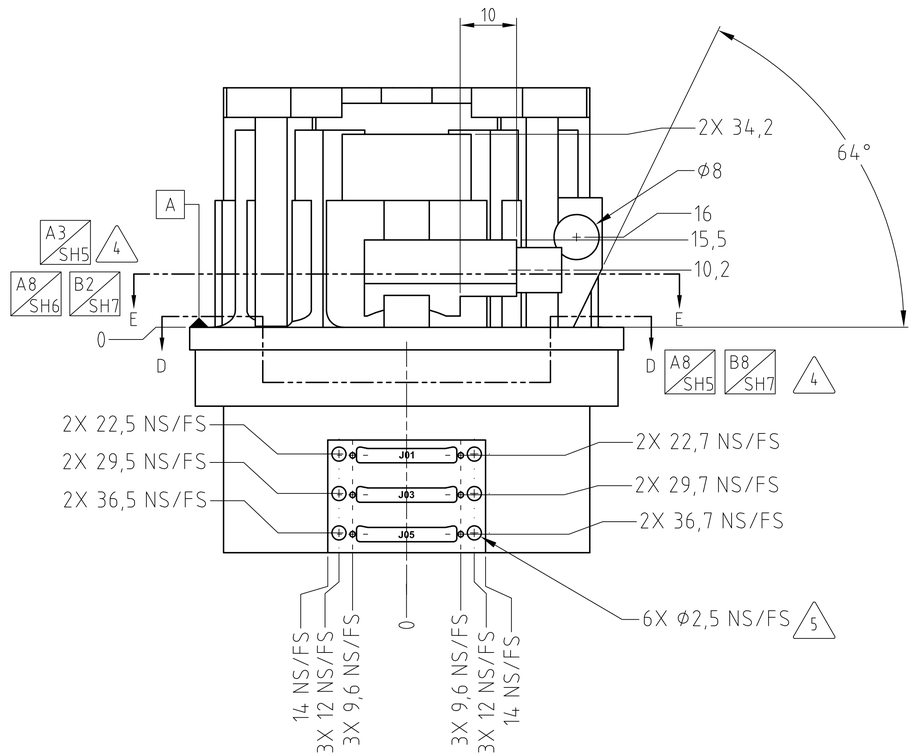

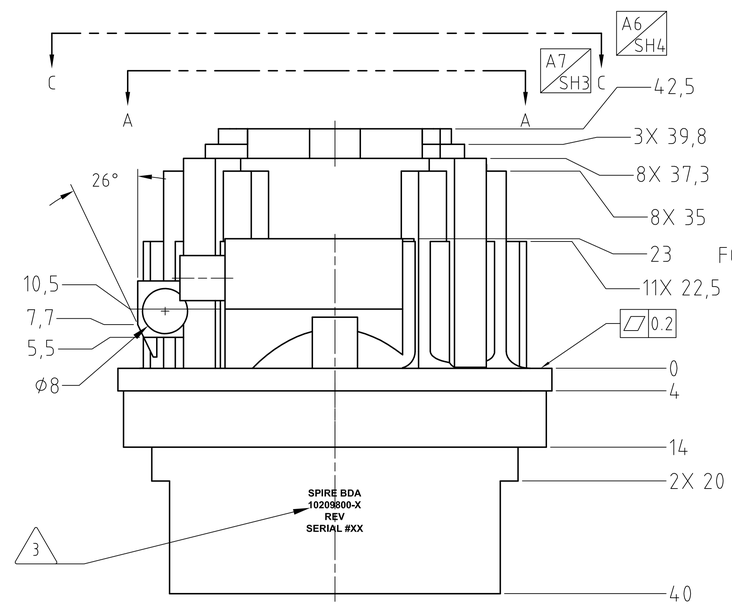

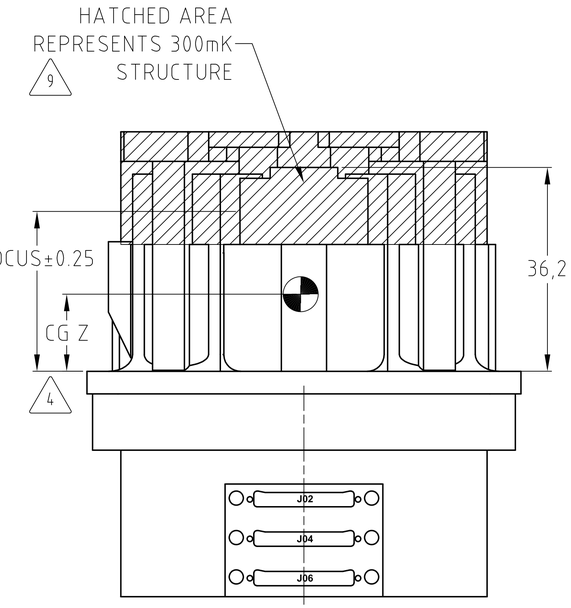

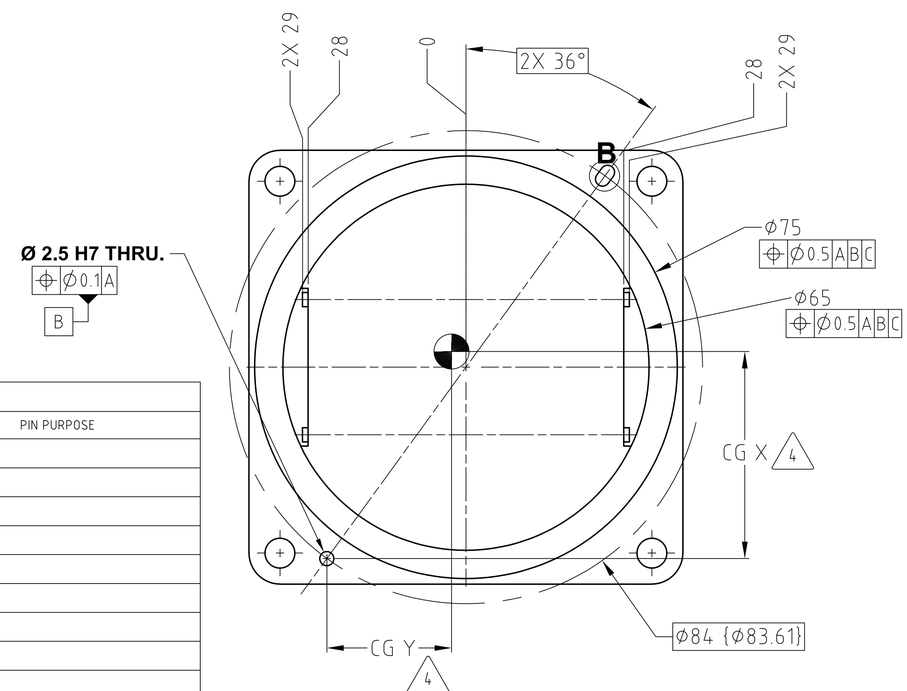

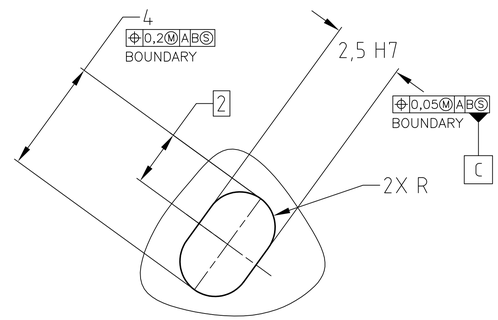

VIEW B
SCALE: 10:1

ALL CONNECTORS					
PIN #	PIN PURPOSE	PIN #	PIN PURPOSE	PIN #	PIN PURPOSE
1	SIGNAL A+	18	SIGNAL T+	35	SIGNAL J-
2	SIGNAL B+	19	SIGNAL U+	36	SIGNAL K-
3	SIGNAL C+	20	SIGNAL V+	37	SIGNAL L-
4	SIGNAL D+	21	SIGNAL W+	38	SIGNAL M-
5	SIGNAL E+	22	SIGNAL X+	39	SIGNAL N-
6	SIGNAL F+	23	SIGNAL Y+	40	SIGNAL P-
7	SIGNAL G+	24	SIGNAL Z+	41	SIGNAL R-
8	SIGNAL H+	25	SIGNAL BIAS V+	42	SIGNAL S-
9	SIGNAL I+	26	SIGNAL A-	43	SIGNAL T-
10	SIGNAL J+	27	SIGNAL B-	44	SIGNAL U-
11	SIGNAL K+	28	SIGNAL C-	45	SIGNAL V-
12	SIGNAL L+	29	SIGNAL D-	46	SIGNAL W-
13	SIGNAL M+	30	SIGNAL E-	47	SIGNAL X-
14	SIGNAL N+	31	SIGNAL F-	48	SIGNAL Y-
15	SIGNAL P+	32	SIGNAL G-	49	SIGNAL Z-
16	SIGNAL R+	33	SIGNAL H-	50	SIGNAL BIAS V-
17	SIGNAL S+	34	SIGNAL I-	51	SIGNAL BIAS GND

SIZE	CAGE NO		REV
A1	23835	10209721	B
SCALE 2:1	UNCLASSIFIED	SHEET 2 OF 7	

REV 2/00

AutoCAD GENERATED

10209721

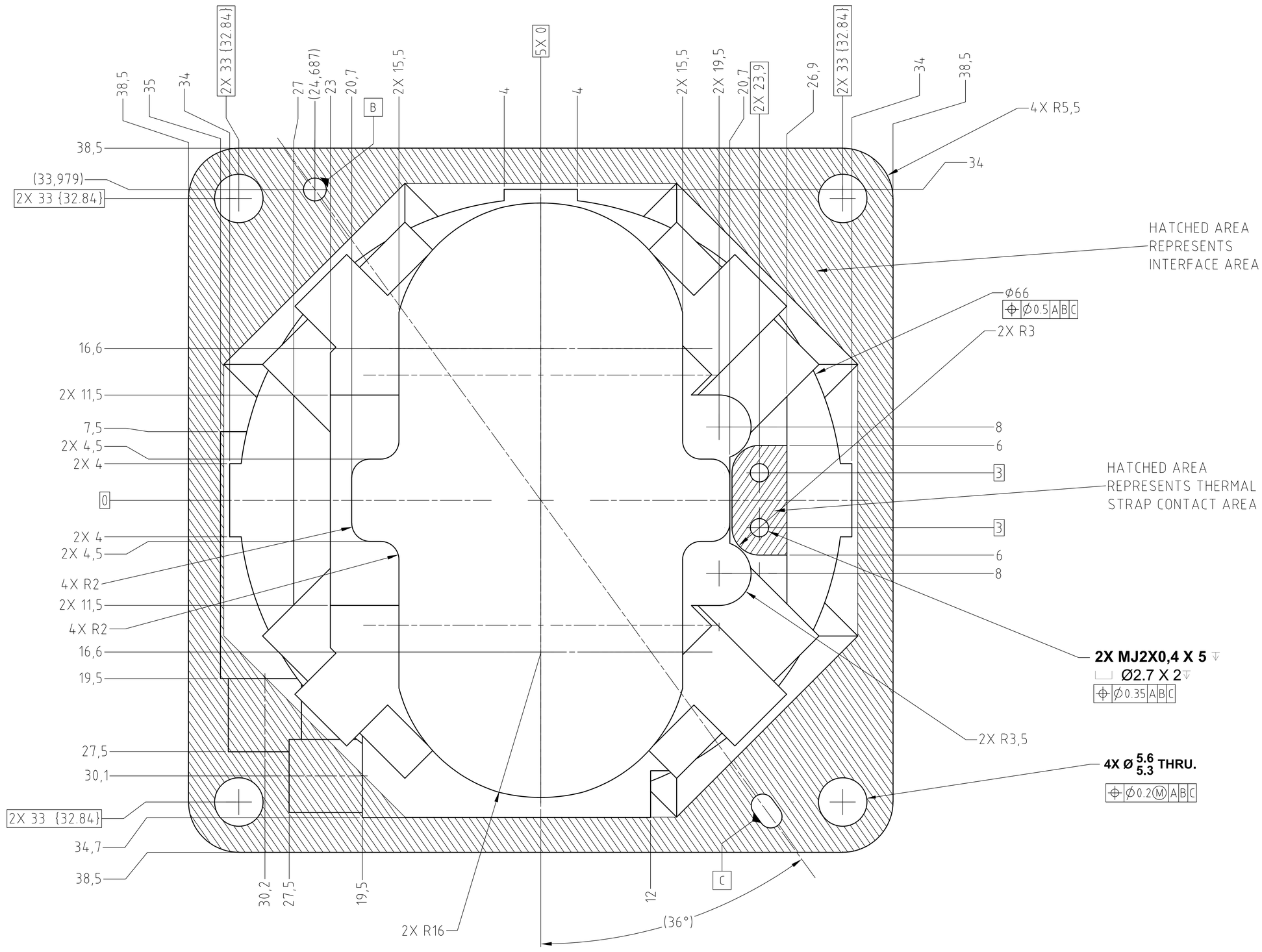

VIEW A-A

H4 / SH2

SIZE	CAGE NO		REV
A1	23835	10209721	B
SCALE 2:1	UNCLASSIFIED	SHEET 3 OF 7	

10209721

AutoCAD GENERATED

REV 2/00

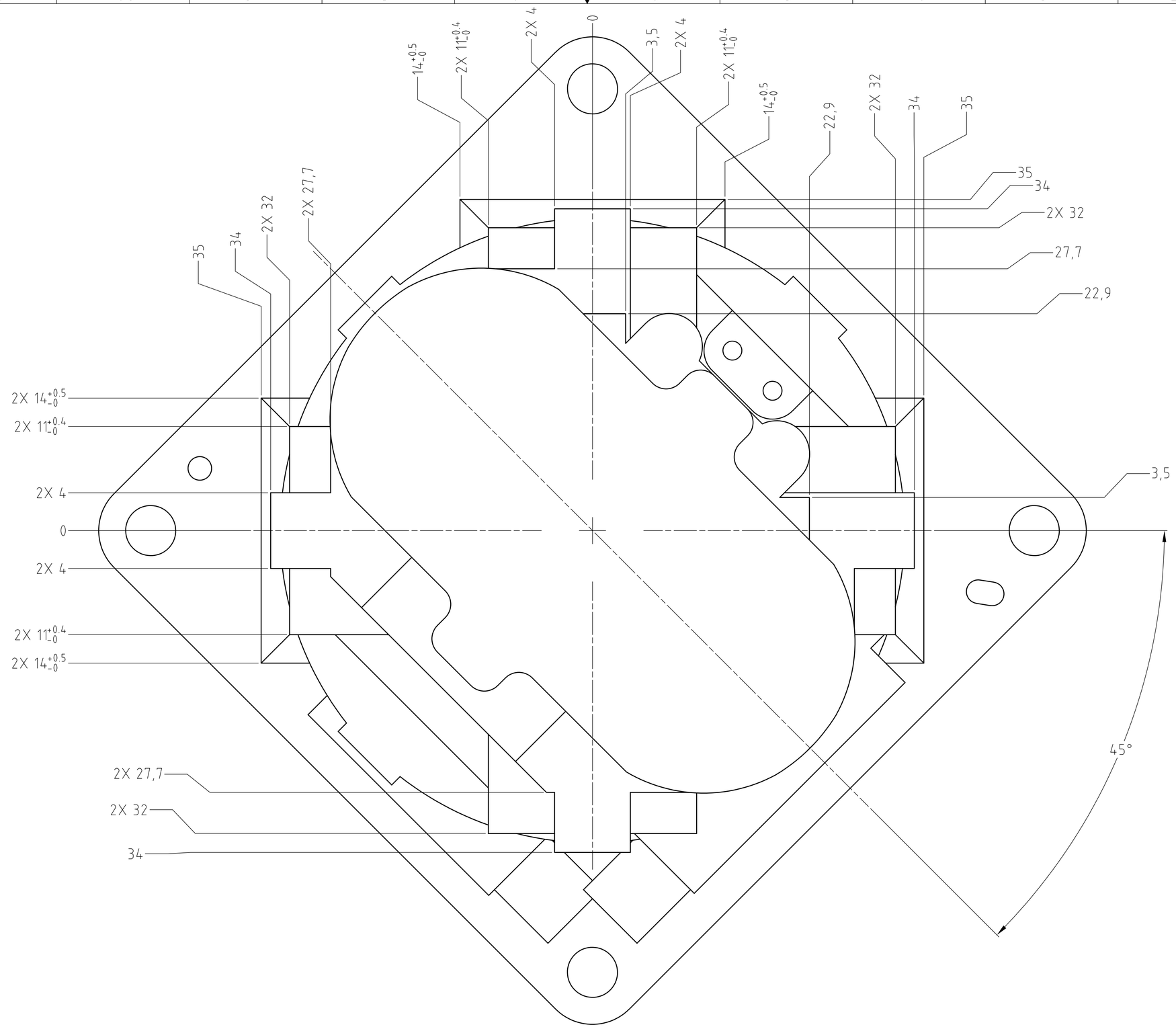

VIEW C-C ROTATED 45° CCW H4/SH2

SIZE	CAGE NO		REV
A1	23835	10209721	B
SCALE 2:1	UNCLASSIFIED	SHEET 4 OF 7	

REV 2/00

AutoCAD GENERATED

10209721

SUBSYSTEM INTERFACE DATA			
UNIT: P/LW			
NUMBER: 10209800-1			
FOCUS: 32.8			
CONNECTOR POSITIONS USED: J05, J06			
MECHANICAL CHARACTERISTICS			
MASS: 632 g			
C.O.G. LOCATION W.R.T. LOCATION HOLE:	X 34.4	Y 24.3	Z 6
MOMENT OF INERTIA:	I_X 772 Kg*mm^2	I_Y 1,145 Kg*mm^2	I_Z 1,423 Kg*mm^2
MECHANICAL INTERFACE MATERIAL: 7075 AL			
SURFACE FINISH DESCRIPTION: CHEM FILM GOLD			
TOTAL CONTACT AREA: 1783 mm^2			
R.M.S. ROUGHNESS OF CONTACT AREA: 3.2 uM			
THERMAL STRAP INTERFACE MATERIAL: CU 99.999% PURE			
THERMAL STRAP SURFACE FINISH DESCRIPTION: GOLD PLATED			
THERMAL STRAP CONTACT AREA: 57.5 mm^2			
THERMAL STRAP R.M.S. ROUGHNESS OF CONTACT AREA: 3.2 uM			

SUBSYSTEM INTERFACE DATA			
UNIT: P/MW			
NUMBER: 10209800-2			
FOCUS: 33.2			
CONNECTOR POSITIONS USED: J01, J02, J03, J04			
MECHANICAL CHARACTERISTICS			
MASS: 632 g			
C.O.G. LOCATION W.R.T. LOCATION HOLE:	X 34.4	Y 24.3	Z 8.5
MOMENT OF INERTIA:	I_X 764 Kg*mm^2	I_Y 1,152 Kg*mm^2	I_Z 1,428 Kg*mm^2
MECHANICAL INTERFACE MATERIAL: 7075 AL			
SURFACE FINISH DESCRIPTION: CHEM FILM GOLD			
TOTAL CONTACT AREA: 1783 mm^2			
R.M.S. ROUGHNESS OF CONTACT AREA: 3.2 uM			
THERMAL STRAP INTERFACE MATERIAL: CU 99.999% PURE			
THERMAL STRAP SURFACE FINISH DESCRIPTION: GOLD PLATED			
THERMAL STRAP CONTACT AREA: 57.5 mm^2			
THERMAL STRAP R.M.S. ROUGHNESS OF CONTACT AREA: 3.2 uM			

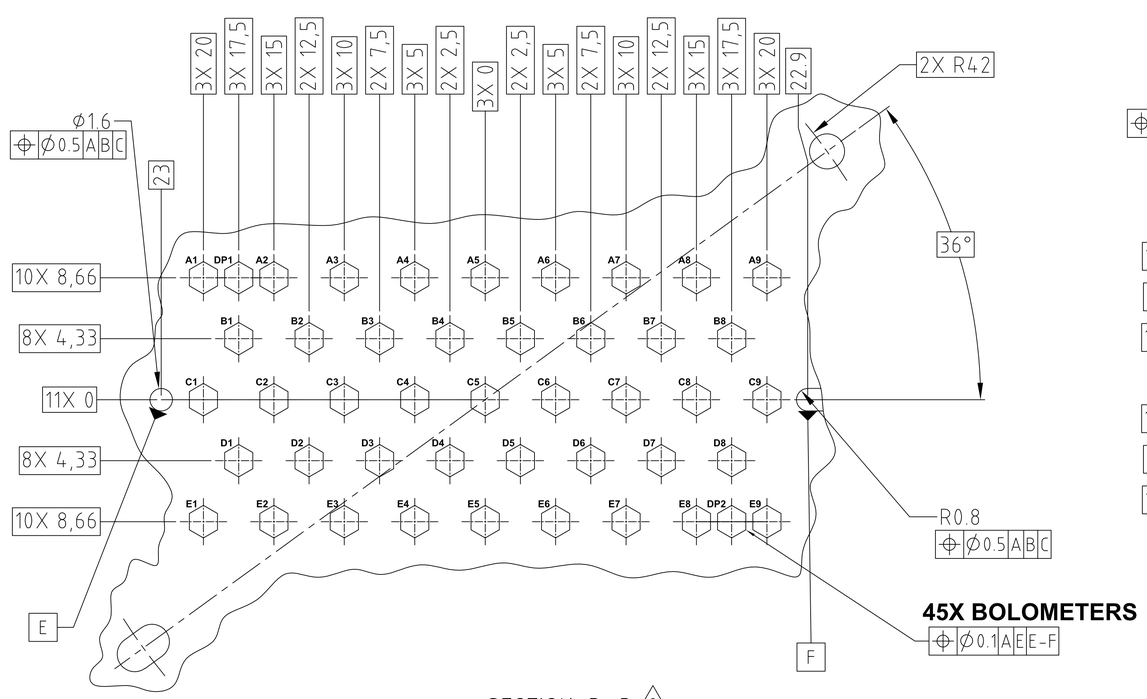

SECTION D–D 8
PHOTOMETER LONG WAVE
SCALE: 5:1

F9 / SH2

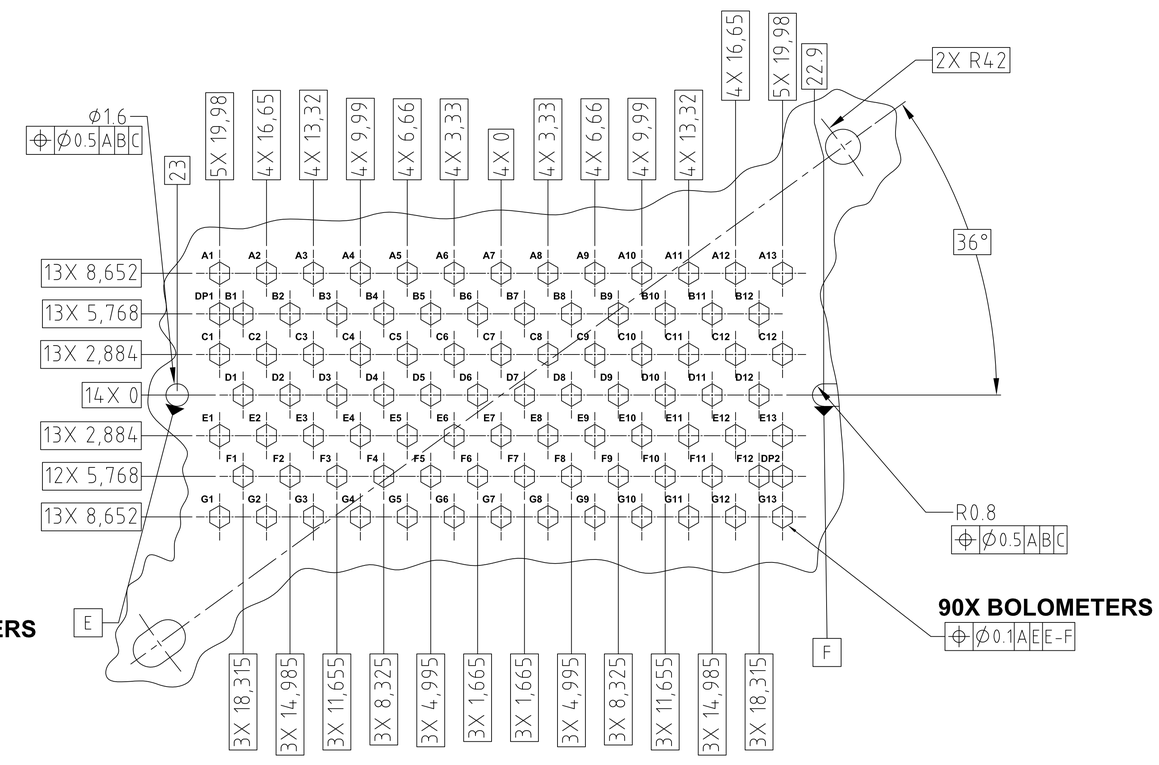

SECTION E–E 8
PHOTOMETER MEDIUM WAVE
SCALE: 5:1

G12 / SH2

SIZE	CAGE NO		REV
A1	23835	10209721	B
SCALE NOTED	UNCLASSIFIED	SHEET 5 OF 7	

REV 2/00

AutoCAD GENERATED

A1 10209721

SUBSYSTEM INTERFACE DATA			
UNIT: P/SW			
NUMBER: 10209800-3			
FOCUS: 25			
CONNECTOR POSITIONS USED: J01, J02, J03, J04, J05, J06			
MECHANICAL CHARACTERISTICS			
MASS: 600 g			
C.O.G. LOCATION W.R.T. LOCATION HOLE:	X 34.5	Y 24.3	Z 6.5
MOMENT OF INERTIA:	I_x 712 Kg*mm^2	I_Y 1,074 Kg*mm^2	I_Z 1,364 Kg*mm^2
MECHANICAL INTERFACE MATERIAL: 7075 AL			
SURFACE FINISH DESCRIPTION: CHEM FILM GOLD			
TOTAL CONTACT AREA: 1783 mm^2			
R.M.S. ROUGHNESS OF CONTACT AREA: 3.2 uM			
THERMAL STRAP INTERFACE MATERIAL: CU 99.999% PURE			
THERMAL STRAP SURFACE FINISH DESCRIPTION: GOLD PLATED			
THERMAL STRAP CONTACT AREA: 57.5 mm^2			
THERMAL STRAP R.M.S. ROUGHNESS OF CONTACT AREA: 3.2 uM			

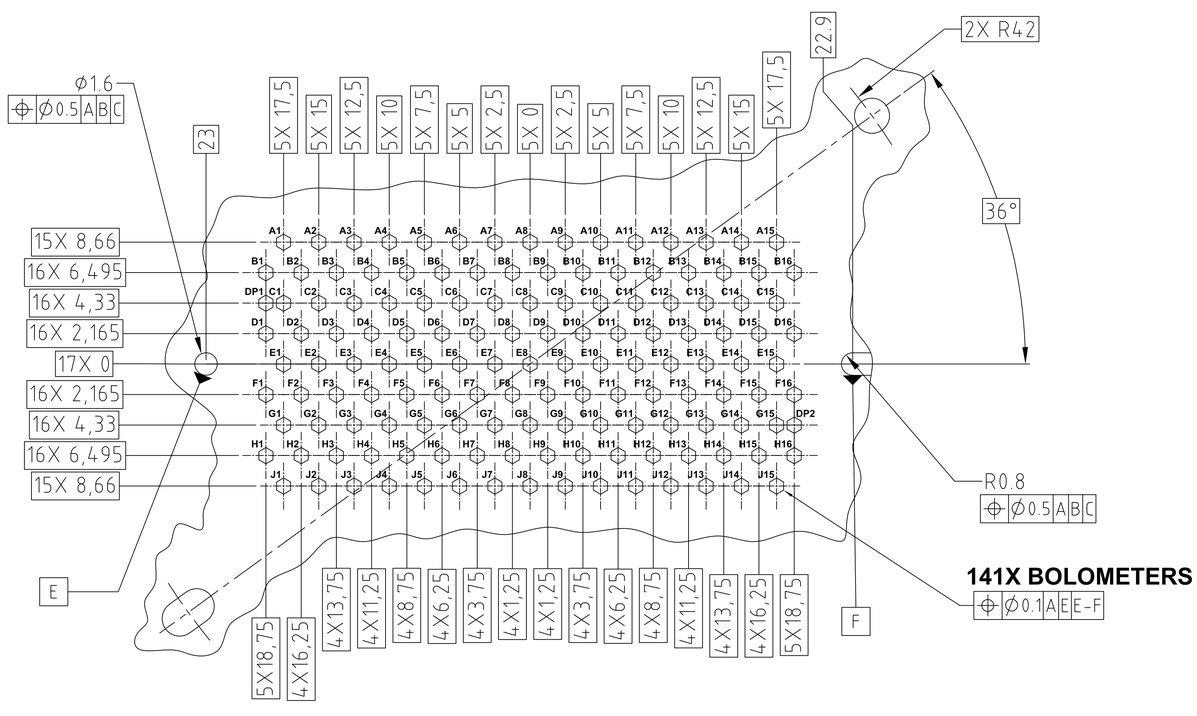

SECTION E-E 8
PHOTOMETER SHORT WAVE
SCALE: 5:1

G12 SH2

SIZE	CAGE NO		REV
A1	23835	10209721	B
SCALE NOTED	UNCLASSIFIED	SHEET 6 OF 7	

REV 2/00

AutoCAD GENERATED

10209721

SUBSYSTEM INTERFACE DATA						
UNIT: S/LW						
NUMBER: 10209800–4						
FOCUS: 36.9						
CONNECTOR POSITIONS USED: J05						
MECHANICAL CHARACTERISTICS						
MASS: 550 g						
C.O.G. LOCATION W.R.T. LOCATION HOLE:	X	34.5	Y	24.1	Z	4.4
MOMENT OF INERTIA:	I_x	665 Kg*mm^2	I_y	990 Kg*mm^2	I_z	1,239 Kg*mm^2
MECHANICAL INTERFACE MATERIAL: 7075 AL						
SURFACE FINISH DESCRIPTION: CHEM FILM GOLD						
TOTAL CONTACT AREA: 1783 mm^2						
R.M.S. ROUGHNESS OF CONTACT AREA: 3.2 uM						
THERMAL STRAP INTERFACE MATERIAL: CU 99.999% PURE						
THERMAL STRAP SURFACE FINISH DESCRIPTION: GOLD PLATED						
THERMAL STRAP CONTACT AREA: 57.5 mm^2						
THERMAL STRAP R.M.S. ROUGHNESS OF CONTACT AREA: 3.2 uM						

SUBSYSTEM INTERFACE DATA						
UNIT: S.SW						
NUMBER: 10209800–5						
FOCUS: 26.7						
CONNECTOR POSITIONS USED: J05, J06						
MECHANICAL CHARACTERISTICS						
MASS: 510 g						
C.O.G. LOCATION W.R.T. LOCATION HOLE:	X	34.6	Y	24.2	Z	6
MOMENT OF INERTIA:	I_x	628 Kg*mm^2	I_y	936 Kg*mm^2	I_z	1,189 Kg*mm^2
MECHANICAL INTERFACE MATERIAL: 7075 AL						
SURFACE FINISH DESCRIPTION: CHEM FILM GOLD						
TOTAL CONTACT AREA: 1783 mm^2						
R.M.S. ROUGHNESS OF CONTACT AREA: 3.2 uM						
THERMAL STRAP INTERFACE MATERIAL: CU 99.999% PURE						
THERMAL STRAP SURFACE FINISH DESCRIPTION: GOLD PLATED						
THERMAL STRAP CONTACT AREA: 57.5 mm^2						
THERMAL STRAP R.M.S. ROUGHNESS OF CONTACT AREA: 3.2 uM						

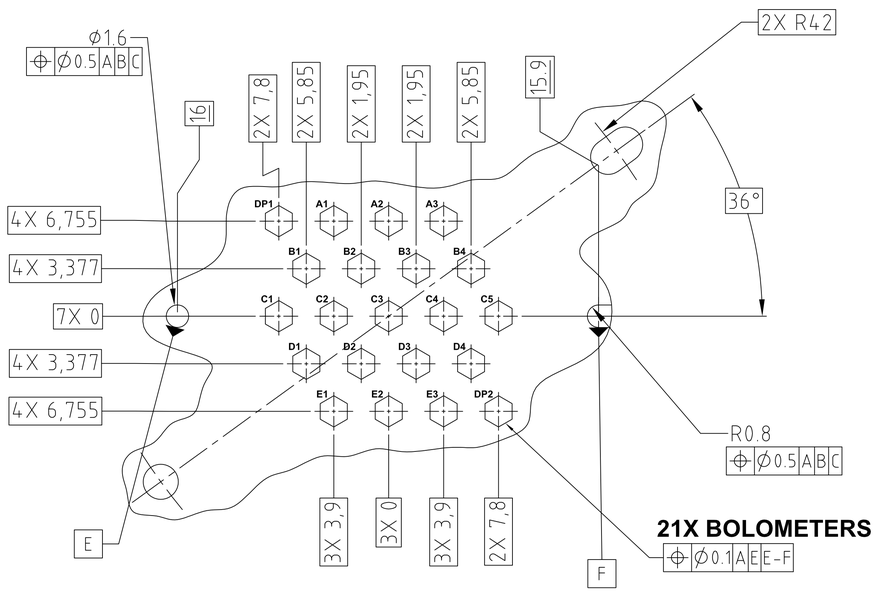

SECTION D–D 8
SPECTROMETER LONG WAVE
SCALE: 5:1

F9 / SH2

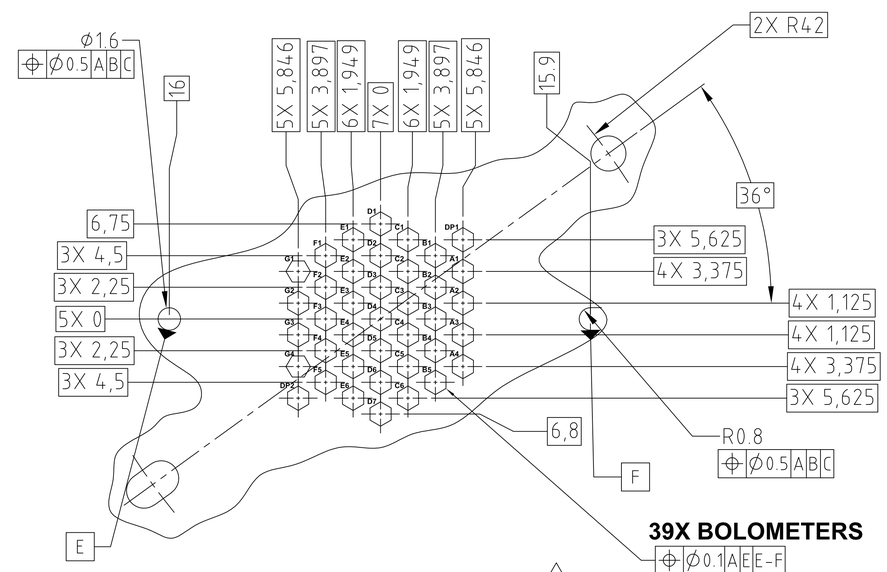

SECTION E–E 8
SPECTROMETER SHORT WAVE
SCALE: 5:1

G12 / SH2

SIZE	CAGE NO		REV
A1	23835	10209721	B
SCALE 5:1	UNCLASSIFIED	SHEET 7 OF 7	

REV 2/00

AutoCAD GENERATED

A1 10209721

ARRAY DEFINITION		10209800-1 P/LW		10209800-2 P/MW				10209800-3 P/SW						10209800-4 S/LW	10209800-5 S/SW	
BDA CONNECTOR		J05	J06	J01	J02	J03	J04	J01	J02	J03	J04	J05	J06	J05	J05	J06
PIXEL MAP	A	R1	E1	A13	R1	A7	C7	R1	E1	D6	F12	D11	C5	R1	R1	–
	B	A8	E2	T1	G1	A6	D7	D16	F1	B6	I11	A10	H6	T1	A4	–
	C	A7	E3	B12	T2	B6	F7	T1	T2	C5	E12	E10	I6	C1	A3	–
	D	A6	E4	C13	E1	C7	E8	B16	H1	A5	H12	C10	F6	DK1	A2	–
	E	A9	D1	A12	D1	A5	G8	C15	G1	E5	G12	B10	G6	B1	A1	–
	F	C9	D2	D12	F1	B5	F8	A15	I1	B5	F13	D10	H7	D1	DK1	–
	G	B8	D3	C12	E2	C6	E9	D15	H2	D5	E13	A9	F7	E1	B3	G3
	H	B7	D4	B11	G2	D6	G9	B15	F2	C4	I12	E9	I7	A1	B2	G4
	I	C7	C1	A11	F2	B4	D9	C14	I2	A4	H13	C9	G7	C2	B1	DK2
	J	B5	C3	E13	G3	C5	F9	D14	G2	D4	G13	B9	H8	D2	C3	F5
	K	B6	C5	D11	E3	D4	E10	A14	H3	B4	F14	D9	F8	B2	C2	F4
	L	A5	T2	C11	D3	A4	G10	A13	I3	C3	E14	A8	G8	E2	C1	E6
	M	T1	E5	B10	F3	C4	F10	B14	E2	B3	I13	C8	I8	A2	D3	E5
	N	B4	C6	A10	G4	B3	E11	C13	F3	A3	H14	E8	F9	C3	D2	E4
	P	C4	C8	D10	E4	C3	G11	B13	G3	A2	G14	D8	H9	D3	D1	D7
	R	B3	D5	B9	F4	B2	F11	D13	H4	D3	I14	B8	G9	B3	E3	D6
	S	C2	D6	C10	E5	D2	E12	A12	I4	C2	F15	C7	I9	E3	E2	D5
	T	B2	D7	C9	D5	A3	G12	C12	E3	B2	H15	E7	F10	C4	E1	D4
	U	B1	D8	A9	F5	A2	F12	D12	F4	D2	I15	A7	H10	DK2	F3	C6
	V	A3	E7	B8	G5	C2	G13	B12	G4	A1	G15	D7	G10	D4	F2	C5
	W	A4	E6	A8	E6	B1	DK2	E11	H5	C1	H16	B7	F11	C5	F1	C4
	X	A1	E8	DB	G6	A1	T/C	A11	E4	B1	DK2	C6	I10	B4	G1	B5
	Y	DK1	DK2	C8	F6	DK1	T/C	C11	I5	DK1	F16	E6	H11	A3	T1	B4
	Z	A2	E9	B7	G7	C1	T/C	B11	F5	D1	E15	A6	G11	T2	G2	T2
JFET INTERFACE	AA	HSJFP7 J13	HSJFP8 J15	HSJFP9 J17	HSJFP10 J19	HSJFP11 J21	HSJFP12 J23	HSJFP1 J01	HSJFP2 J03	HSJFP3 J05	HSJFP4 J07	HSJFP5 J09	HSJFP6 J11	HSJFS3 J05	HSJFS1 J01	HSJFS2 J03
	BB	HSJFP7 J14	HSJFP8 J16	HSJFP9 J18	HSJFP10 J20	HSJFP11 J22	HSJFP12 J24	HSJFP1 J02	HSJFP2 J04	HSJFP3 J06	HSJFP4 J08	HSJFP5 J10	HSJFP6 J12	HSJFS3 J06	HSJFS1 J02	HSJFS2 J04
	CC	HSJFP7 J35	HSJFP8 J36	HSJFP9 J37	HSJFP10 J38	HSJFP11 J39	HSJFP12 J40	HSJFP1 J29	HSJFP2 J30	HSJFP3 J31	HSJFP4 J32	HSJFP5 J33	HSJFP6 J34	HSJFS3 J13	HSJFS1 J11	HSJFS2 J12
	DD	HSJFP7 J47	HSJFP8 J48	HSJFP9 J49	HSJFP10 J50	HSJFP11 J51	HSJFP12 J52	HSJFP1 J41	HSJFP2 J42	HSJFP3 J43	HSJFP4 J44	HSJFP5 J45	HSJFP6 J46	HSJFS3 J17	HSJFS1 J15	HSJFS2 J16
FPU HARNESS		7	8	9	10	11	12	1	2	3	4	5	6	15	13	14
CRYO HARNESS		6	6	5	5	4	4	9	9	8	8	7	7	1	2	2

7. INFORMATION IN THIS DOCUMENT IS ALSO CONTAINED IN THE HARNESS DEFINITION DOCUMENT, RAL DOCUMENT SPIRE-RAL-PRJ-000608. IN AREAS WHERE THERE ARE CONFLICTS, THE HARNESS DEFINITION DOCUMENT TAKES PRECEDENCE.

6. ESD PROTECTION RESISTORS ARE 7 TIMES THE SOURCE RESISTOR.

5. GROUND WIRE TO BE TERMINATED AT INSTRUMENT INTEGRATION. WIRE WILL HAVE A MINIMUM LENGTH OF 150MM.

4. UNLESS OTHERWISE NOTED, ⏚ IS JFET CHASSIS GROUND.

3. JFET MEMBRANE HEATER IS 0.0204 TIMES THE SOURCE RESISTOR.

2. ALL RESISTORS HAVE A TOLERANCE OF ±40%.

1. THIS TECHNICAL DATA IS EXPORT CONTROLLED UNDER U.S. LAW AND IS BEING TRANSFERRED BY JPL TO PPARC PURSUANT TO THE NASA / PPARC LETTER OF AGREEMENT WHICH ENTERED INTO FORCE ON DECEMBER 2, 1999. THIS TECHNICAL DATA IS TRANSFERRED TO PPARC FOR USE EXCLUSIVELY ON THE NASA/PPARC SPIRE ON FIRST COOPERATIVE PROJECT, MAY NOT BE USED FOR ANY OTHER PURPOSE, AND SHALL NOT BE RE-TRANSFERRED OR DISCLOSED TO ANY OTHER PARTY WITHOUT THE PRIOR WRITTEN APPROVAL OF NASA.

NOTES: UNLESS OTHERWISE SPECIFIED

LTR	ZONE	DESCRIPTION	DWN	CHK	STRUCT	MATL	THRM CONT	ENGR	ELEC	SUB NET	MFG	RELEASE DATE
A		INITIAL RELEASE										
		SEE TITLE BLOCK										

To agree with SPIRE HEID

QTY REQD	ITEM NO	REF DES	CASE NO	PART OR IDENTIFYING NO	NOMENCLATURE OR DESCRIPTION	SPECIFICATION	MATERIAL OR NOTE	ZONE

PARTS LIST

MATERIAL

METRIC
THIRD ANGLE PROJECTION

UNLESS OTHERWISE SPECIFIED DIMENSIONS ARE IN MILLIMETERS
LINEAR TOLERANCES:
0–6 ± 0.1
OVER 6–30 ± 0.2
OVER 30–315 ± 0.3
OVER 315–1000 ± 0.5
OVER 1000 ± 1.2
ANGULAR TOLERANCES: ± 0.5°
MACHINE FINISH 3.2/
NANOMETRIC
DO NOT SCALE DRAWING
INTERPRET DWG PER ANSI Y14.100M

SPIRE
NEXT ASSEMBLY | USED ON
APPLICATION

CONTRACT NO 962525
APPD | DATE
DWN D CRUMB 5/13/01
CHK
STRUCT
MATL
THRM CONT
ENGR
ELEC

JET PROPULSION LABORATORY
CALIFORNIA INSTITUTE OF TECHNOLOGY
PASADENA, CA 91109
RELEASED THROUGH EDMS

WIRING SCHEMATIC, SPIRE

SIZE A0 | CASE NO 23835 | 10209725 | REV A
SCALE NONE | UNCLASSIFIED | SHEET 1 OF 1
REV 2/00

FRAME	CASE NO	DRAWING NUMBER	REV	SH NO
1 OF 2	23835	10209725	A	1

10209725 A0 34 SHEETS

10509252 SPIRE

A0 UNCLASSIFIED

NOT RELEASED

Released on MAR-18-2003 by Richard G Bamsiner and signed by James J Bock CHK, Dustin J Crumb DEGN, Gerald W Lilienthal PEM, Leonard J Husted COGE, Richard G Bamsiner

SPIRE Assembly Array/Backshort Assembly Traveller
Revised by A Turner March 5, 2003

AIDS:	240712

Device #	SSW 1.3
Date	14-Nov-03
Collected by	A Turner

Device Thickness Measurements		
Zero at	Measure at	Meas (mm)
1	1	0.0000
1	2	-1.0160
1	3	-1.0175
1	4	-1.0185
1	5	-0.0020
1	6	-1.0260
1	7	-1.0175
1	8	-1.0125
1	9	-1.0155
1	10	-1.0165
1	11	-1.0360
1	12	-1.0280
1	13	-1.0135
1	14	-1.0135
1	15	-1.0130
1	16	0.0005
1	17	-1.0375
1	18	-1.0260
1	19	-1.0155
1	20	-0.0005

Targets	mm	tol (mm)
Stack thick	1.0130	0.0470
NTD chip	0.0250	0.0100
BS dist	0.069	0.007

Stack Thickness (mm)	
Average	1.0202
max	1.0375
min	1.0125
p-p	0.0250
Backshort Thickness(mm)	
Average	0.9479
max	0.9490
min	0.9470
p-p	0.0020
Backshort Distance (mm)	
Average	0.0665
max	0.0605
min	0.0730
p-p	0.0125
NTD Chip Thickness(mm)	
Average	0.0309
max	0.0150
min	0.0385
p-p	0.0235

Height measurements of Backshort to Detector to NTD chip

a= BS height
b= to web
c= NTD height

Pillar Height Measurements							
Zero at	Row	Pixel	a (mm)	b(mm)	c(mm)	NTD chip (mm)	BS dist (mm)
1	T	1		-1.0150	-1.0515	0.0365	
1	G	1	-0.9470	-1.0165	-1.0315	0.0150	0.0695
1	G	2	-0.9470	-1.0170	-1.0485	0.0315	0.0700
1	G	3	-0.9480	-1.0195	-1.0555	0.0360	0.0715
1	G	4	-0.9480	-1.0235	-1.0555	0.0320	0.0755
1	DK	2	-0.9480	-1.0280	-1.0615	0.0335	0.0800
1	F	1	-0.9470	-1.0135	-1.0515	0.0380	0.0665
1	F	2	-0.9480	-1.0135	-1.0355	0.0220	0.0655
1	F	3	-0.9480	-1.0140	-1.0320	0.0180	0.0660
1	F	4	-0.9480	-1.0160	-1.0410	0.0250	0.0680
1	F	5	-0.9475	-1.0210	-1.0385	0.0175	0.0735
1	E	1	-0.9480	-1.0135	-1.0425	0.0290	0.0655
1	E	2	-0.9480	-1.0105	-1.0385	0.0280	0.0625
1	E	3	-0.9480	-1.0105	-1.0380	0.0275	0.0625
1	E	4	-0.9480	-1.0115	-1.0500	0.0385	0.0635
1	E	5	-0.9480	-1.0165	-1.0390	0.0225	0.0685
1	E	6	-0.9480	-1.0210	-1.0580	0.0370	0.0730
1	D	1	-0.9475	-1.0150	-1.0405	0.0255	0.0675
1	D	2	-0.9480	-1.0125	-1.0485	0.0360	0.0645
1	D	3	-0.9475	-1.0095	-1.0470	0.0375	0.0620
1	D	4	-0.9490	-1.0095	-1.0450	0.0355	0.0605
1	D	5	-0.9485	-1.0110	-1.0405	0.0295	0.0625
1	D	6	-0.9485	-1.0155	-1.0535	0.0380	0.0670
1	D	7	-0.9480	-1.0210	-1.0560	0.0350	0.0730
1	C	1	-0.9480	-1.0130	-1.0420	0.0290	0.0650
1	C	2	-0.9480	-1.0105	-1.0470	0.0365	0.0625
1	C	3	-0.9480	-1.0090	-1.0465	0.0375	0.0610
1	C	4	-0.9485	-1.0105	-1.0465	0.0360	0.0620
1	C	5	-0.9485	-1.0130	-1.0415	0.0285	0.0645
1	C	6	-0.9485	-1.0175	-1.0505	0.0330	0.0690
1	B	1	-0.9480	-1.0145	-1.0505	0.0360	0.0665
1	B	2	-0.9480	-1.0115	-1.0495	0.0380	0.0635
1	B	3	-0.9480	-1.0110	-1.0405	0.0295	0.0630
1	B	4	-0.9480	-1.0120	-1.0385	0.0265	0.0640
1	B	5	-0.9480	-1.0145	-1.0345	0.0200	0.0665
1	DK	1	-0.9475	-1.0150	-1.0525	0.0375	0.0675
1	A	1	-0.9475	-1.0150	-1.0420	0.0270	0.0675
1	A	2	-0.9475	-1.0130	-1.0465	0.0335	0.0655
1	A	3	-0.9475	-1.0130	-1.0440	0.0310	0.0655
1	A	4	-0.9475	-1.0135	-1.0485	0.0350	0.0660
1	T	2		-1.0150	-1.0420	0.0270	

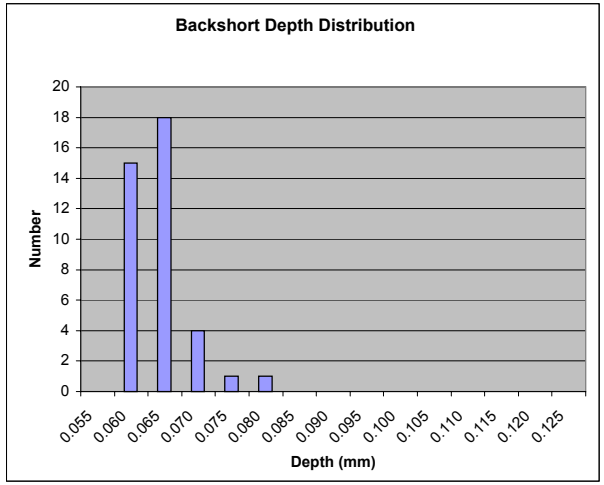

SSW Backshort Distance Map (in mm)

Device	**SSW 1.3**
Date	**SSW BS 1.1**
Proc#	**37939**
By	**A Turner**
AIDS	**240712**

			D1 0.067			
T1		E1 0.066		C1 0.065		DK1 0.067
	F1 0.067		D2 0.065		B1 0.067	
G1 0.070		E2 0.063		C2 0.063		A1 0.067
	F2 0.066		D3 0.062		B2 0.064	
G2 0.070		E3 0.063		C3 0.061		A2 0.065
	F3 0.066		D4 0.061		B3 0.063	
G3 0.072		E4 0.064		C4 0.062		A3 0.065
	F4 0.068		D5 0.062		B4 0.064	
G4 0.076		E5 0.069		C5 0.064		A4 0.066
	F5 0.073		D6 0.067		B5 0.067	
DK2 0.080		E6 0.073		C6 0.069		T2
			D7 0.073			

Stack Thickness (mm)	
Average	1.0202
max	1.0375
min	1.0125
p-p	0.0250
Backshort Thickness(mm)	
Average	0.9479
max	0.9490
min	0.9470
p-p	0.0020
Backshort Distance (mm)	
Average	0.0665
max	0.0605
min	0.0730
p-p	0.0125
NTD Chip Thickness(mm)	
Average	0.0309
max	0.0150
min	0.0385
p-p	0.0235

BS dist criteria (mm)	
low	0.062
high	0.076

CMI *Advancing Ultra-Precision Manufacturing*

Custom Microwave Inc.
940 Boston Avenue
Longmont, CO 80501

CERTIFICATE OF COMPLIANCE

JPL CUSTOMER	1248788 PURCHASE ORDER NUMBER
3513 INVOICE NUMBER	10209853 PART NUMBER(S)
P8645 LOT NUMBER(S)/SERIAL	1 EA. QUANTITY

Custom Microwave, Inc. certifies that all materials and processes used in the manufacturing of supplied parts conforms in all respects to the above mentioned purchase order, specification and/or drawing requirements and that documents are on file to substantiate this and are available for examination. Custom Microwave, Inc. further certifies that no parts supplied against this purchase order contain mercury or have come in contact with mercury or mercury compounds nor do they contain beryllium or beryllium compounds except beryllium copper.

Authorized Signature Quality Assurance Manager	05/28/03 Date

CMI CAGE CODE: 5Y549

MATERIALS:

COPPER C101 HOUSING: RM#1181
BRASS ASTM B-16 RM# 1200
SN96 SOLDER: RM#1183

PROCESSES:

COPPER ELECTROFORM COPPER PER ASTM B832 / MIL-C-14550
NICKEL PLATE PER QQ-N-290, CLASS 2, THICKNESS 10 TO 20 MILLIONTHS
GOLD PLATE PER MIL-G-45204, TYPE 3, CLASS 1, GRADE A / ASTM B488

NCR 12251

CMI *Advancing Ultra-Precision Manufacturing*

Custom Microwave Inc.
940 Boston Avenue
Longmont, CO 80501

NON CONFORMANCE REPORT

1. NCR # : 12251

2. Pg. 1 of 2

3. PART # :	REV.	4. PART DESCRIPTION :	5. PROJ. # :	6. CUSTOMER :
10209853	0	FEEDHORN	P8645	JPL

7. SERIAL # OR BATCH #	8. VENDOR NAME	9. VEND CERT#	10. VEND P.O #	11. VEND #

8. DETAILS OF NON CONFORMANCE

12. ITEM #	13. DESCRIPTION Dwg Zone, Spec. Para, Ser. no.	14. DISCREPANCY	15. TEAM #	16. QTY	17. DEFECT CODE
1	E-10, //.003 A	.0041	7	1	O.S.D.
2	E-8, 1.884 +.02/-0	1.8781	4/7	1	O.S.D.
3	G-10, Ø2.155/2.145 (37X)	2.155 - 2.1681 (36X)	8	1	O.S.D.
4	E-4, Ø.193/.188 (37X)	.1935 - .1874 - .1872 (3X)	4	1	O.S.D.

18. ORIGINATOR: (PRINT & SIGN)	DATE:	19. OPERATION DETECTED AT:	20. WORK AREA DETECTED AT:
TROY GEORGE Troy L. George	5-27-03	175	INSPECTION

21. ITEM #	22. OPER #	23. DISPOSITION	24. STAMP/ SIGN
1-4		REQUEST USE AS IS.	
5		REQUEST USE AS IS.	

25. RTV Qty:	26. SCRAP Qty :	27. REWORK Qty:	28. STANDARD REPAIR Qty:	29. USE AS IS Qty :	30. REPAIR Qty :
—	—	—	—	1	—

31. CLASSIFICATION	32. CUSTOMER APPROVAL REQUIRED	33. CORRECTIVE ACTION REQUIRED
CRITICAL ☐ MAJOR ☐ MINOR ☒	YES ☒ NO ☐	YES ☒ NO ☐

34. Project Leader :	DATE :	35. Customer Approval:	DATE :	36. Quality Assurance :	DATE
Dan Jones	5/27/03			Troy L. George	5-27-03

37. CAUSE :

1-2. LAPPED OUT OF SPEC. WHILE TRYING TO REMOVE INDICATOR SCRATCH.

3. DIMENSION NOT CONTROLLED ENOUGH BY PROCESS.

4. 1 HOLE MADE OVERSIZED BY PICKING WAVEGUIDE AFTER ETCH. 2 HOLES ARE UNDERSIZED AFTER PLATING.

5. LAB DID NOT FOLLOW PRINT.

38. CAR#:	39. ACTIONEE :	40. ASSIGNED DATE:

41. CORRECTIVE ACTION :

3. ADDED INSPECTION STEP TO CONTROL DIMENSION BEFORE ETCH.

4. WILL RUN MANDREL SLIGHTLY LARGE NEXT TIME TO ENSURE DIAMETERS WILL MEET SPECIFICATION AFTER PLATING.

42. EFFECTIVITY DATE/ (Lot#/S/N)

43. DATE COMPLETED :	44. APPROVED BY:	45. CACODE#:

FORM 0001

CMI *Advancing Ultra-Precision Manufacturing*

Custom Microwave Inc.
940 Boston Avenue
Longmont, CO 80501

NON CONFORMANCE REPORT

1. NCR # : 12251

2. Pg. 2 of 2

3. PART # :	REV.	4. PART DESCRIPTION :	5. PROJ. # :	6. CUSTOMER :
10209853	0	FEEDHORN	P8645	JPL

7. SERIAL # OR BATCH #	8. VENDOR NAME	9. VEND CERT#	10. VEND P.O #	11. VEND #

8. DETAILS OF NON CONFORMANCE

12. ITEM #	13. DESCRIPTION Dwg Zone, Spec. Para, Ser. no.	14. DISCREPANCY	15. TEAM #	16. QTY	17. DEFECT CODE
5	NOTE 7	HOLES PLATED	6	1	RT

18. ORIGINATOR: (PRINT & SIGN)	DATE:	19. OPERATION DETECTED AT:	20. WORK AREA DETECTED AT:
TROY GEORGE Troy L. George	5-27-03	175	INSPECTION

21. ITEM #	22. OPER #	23. DISPOSITION	24. STAMP/ SIGN

25. RTV Qty:	26. SCRAP Qty :	27. REWORK Qty:	28. STANDARD REPAIR Qty:	29. USE AS IS Qty :	30. REPAIR Qty :

31. CLASSIFICATION CRITICAL ☐ MAJOR ☐ MINOR ☐	32. CUSTOMER APPROVAL REQUIRED YES ☐ NO ☐	33. CORRECTIVE ACTION REQUIRED . YES ☐ NO ☐
34. Project Leader : DATE :	35. Customer Approval: DATE :	36. Quality Assurance : DATE :

37. CAUSE :

38. CAR#:	39. ACTIONEE :	40. ASSIGNED DATE:

41. CORRECTIVE ACTION :

42. EFFECTIVITY DATE/ (Lot#/S/N)

43. DATE COMPLETED :	44. APPROVED BY:	45. CACODE#:

FORM 0001

SHIPPER

EDM Supplies, Inc.
9806 Everest Street
Downey, CA 90242-3199
Phone: 562-803-6563
Fax: 562-803-4281

Sales Order Number 250913
Shipper Number 2
Ship Date 06/28/02
Page 1

SOLD TO
103884
CUSTOM MICROWAVE
940 BOSTON AVE
LONGMONT CO 80501

BILL TO
103884
CUSTOM MICROWAVE
940 BOSTON AVE
LONGMONT CO 80501

FOB: DOWNEY Terms: NET 30 Freight: PREPAID AND ADD

Customer's PO: 12557 Resale No:

LI#	Order/Qty	UM	Part/Description	Units/Pkg	Ship Qty	Lot Number
1	10	EA	C22-023 .023 DIA. X 12 PBR Rm 1200		5	0
2	10	EA	C22-024 .024 DIA. X 12 PBR Rm 1201		10	0
5	10	EA	C22-027 Rm 1204 .027 DIA. X 12 PBR *****CERTIFICATIONS***** WE HEREBY CERTIFY THIS MATERIAL TO BE PRECISION BRASS ROD ALLOY 260 SIGNED: Noah Andreau ORDERED BY DAN JONGSMA		4	0

Ship Via: UPS GRND PPB Waybill No:

SHIP TO: CUSTOM MICROWAVE
940 BOSTON AVE
LONGMONT CO 80501

EIS Phoenix
1524 West 14th Street Suite 106
TEMPE AZ 85281
USA

Cust. Phone: 3036510707

Packing List # 2643045
Page: 2 / 3

Sold To: CUSTOM MICROWAVE, INC
940 BOSTON AVE
LONGMONT CO 80501
USA

Ship To: CUSTOM MICROWAVE, INC
940 BOSTON AVE
LONGMONT CO 80501
USA

1183

Date: 04/22/02 00:46:23
Sales Order #: 16054154
Sales Order Dt: 04/08/02

CUSTOMER ORDER NO.	PCS.	WT.	BILL OF LADING
12146			2643045

PACKING LIST NO.	ORDER DATE	CUST. NO.	INSIDE SALESMAN	ORDERED BY
2643045	04/08/02	80913	Sales Krist Althoff	

SHIP VIA	SHIP DATE	SALESMAN	PICKED BY	DATE
FRT PPD & CHG	04/22/02	99944		

Phone #: 30332

CATALOG	DESCRIPTION (COLOR: PUT UP:)	U/M	QUANTITY ORDERED	QUANTITY SHIPPED	QUANTITY BACK ORDERED
SN96S0.031 2306B	SOLDER,SOLID WIRE,SN96.3AG3.7,1 LB	LB	2.00	2	0.00
KES185G 7001B	185 RMA Rosin Flux, 1-gal	GL	1.00	1	0.00

CERTIFICATE OF CONFORMANCE

PRODUCTS SHIPPED ON THIS P.O. NUMBER, IDENTIFIED DIRECTLY ABOVE WERE MANUFACTURED IN CONFORMANCE WITH MANUFACTURER'S SPECIFICATIONS

Signature / Title: [signature], Cert Analyst

Date of Mfg	Lot/Batch Number	Shelf Life	Date of Expir.
03/26/02	210903	UNLIMITED	N/A
/ /			/ /
/ /			/ /

THIS SALE IS SUBJECT TO ALL CONDITIONS AND PROVISIONS APPEARING ON THE REVERSE HEREOF

outokumpu TM

EN 10 204
INSPECTION CERTIFICATE 3.1.B
29.12.2000

COPPER AND BRASS SALES
WESTERN REGION PURCHASING DEPT
1440 NORTH HARBOR BLVD SUITE
225, FULLERTON CA 92635
USA

Your order: P.O. 752104, HORSEHEADS, NY

Our reference: 609232

Invoice/date: VT76622830 22.12.2000

Marks: P.O. 752104

Item	Product, Grade and Size		
004	OFE-OK COPPER ROD, ROUND 60,32 ASTM HARD 135985-0, C10100, 2-3/8'' X 12 FT ML ASTM-F68-93	1364.50 KG 3009.00 LB	VT60923204

RM 1181

Certification of Test Report
Customer Custom Microwave Inc

Invoice #	Customer PO	Date
H57273	12462	4/15/02

We hereby certify that this report represents materials shipped on the above order
COPPER AND BRASS SALES

Authorized By

Due to the 100% micrographic inspection and other tests throughout our manufacturing process each piece of the following material is: OFE-OK® Certified Grade Copper acc. to ASTM F 68-99

Mechanical properties

Item	Tensile strengh R_m N/mm²	0.2 % proof strength $R_{p0.2}$ N/mm²	Elongation %	Hardness	Grain size mm
004	ksi 44	41	A5 15	HRF 86	

Chemical composition
Specified value (ASTM B170-99)

Analytical methods:
Optical emissiospectrometer Spark and DC-arc
Leco 436 DR

% min	ppm max															
Cu	Ag	As	Bi	Cd	Fe	Mn	Ni	O	P	Pb	S	Sb	Se	Sn	Te	Zn
99.99	25	5	1	1	10	0.5	10	5	3	5	15	4	3	2	2	1
Measured value																
99.998	12	<2	<0.5	<1	<1	<0.2	<1	0.9	<1	<0.5	5	<1	<1	<1	<1	<1

Electrical conductivity at 20 °C % IACS (mass), annealed (≥101): >101.5
Metallographic examination (≤Class 2): Class A = 1 B = 1 C = 1
Hydrogen embrittlement test (min 10 bends): pass
Quench test for oxide adherence: good

Material is free of mercury contaminates

We hereby certify, that the material described above complies with the order
OUTOKUMPU PORICOPPER OY

Address Telephone Telefax

Alcoa Engineered Products
Cressona, PA 17929
(570) 385-5000

CERTIFIED INSPECTION REPORT
AND TEST RESULTS
WROUGHT PRODUCTS

VINCENT METALS
P.O. BOX 360
RM 1139
MINNEAPOLIS MN 55440

VINCENT METAL GOODS
5050 FLORENCE STREET
DENVER CO 80238

CODE NUMBER: 02200404
ORDER NUMBER: CO 264363
INVOICE NO.:
INVOICE DATE: / /
GROSS WEIGHT: 525
B/L NO.: 515054
DATE SHIPPED: / /
VIA: OPEN TOP TRUCK
F.O.B.: DEST N

CUSTOMER P.O. NO.: 365444
GOVT. CONTRACT NO.:

AUTHORIZED SIGNATURE(S)
Elizabeth J Chirico
ELIZABETH J. CHIRICO 04/01/01
QUALITY SYSTEMS MANAGER

Products as follows

ASTM B 221-00
QQ-A-200/8F AMS-QQ-A-200/8
ASME SB 221
MEETS T6 TEMPER REQUIREMENTS

We hereby certify that the material covered by this report has been inspected and tested in accordance with the Seller's standard sampling plan or the requirements of any specifications of the material described in this report and has been found to meet the applicable requirements described herein, and that samples representative of the material met the composition limits and had the mechanical properties shown. Also, note that Mercury is not a normal contaminant in aluminum alloys. Neither Mercury nor any of its compounds are used in the manufacture of our extrusions.

Alcoa Engineered Products

ORDER NUMBER	ALLOY AND TEMPER
264363	6061-T6511

ITEM	ITEM DESCRIPTION	PRODUCT CODE	QUANTITY SHIPPED PCS., FT., ETC.	WGT. IN LBS. OR AS INDICATED
003	C/P 51665006 ECON-O-ROD .375 DIAMETER (+/-.005) SEC 500333 LEN 12' WFC (W .130 F 09 C .40)	L17002	334 PC 4008.0 FT 1 BNDL	519

SHIPPED BY: VINCENT METAL GOODS
YOUR PO NBR. 12249
OUR NBR. 986131
ITEM #1

c 146108-1

MECHANICAL PROPERTIES

LOT NUMBER	RACK FROM/TO	** NUMBER OF TESTS	STRENGTH KSI* TENSILE MIN.	TENSILE MAX.	YIELD*** MIN.	YIELD*** MAX.	CONDUCTIVITY MIN.	CONDUCTIVITY MAX.	ELONG % IN 2" OR 4D MIN.	ELONG % IN 2" OR 4D MAX.
246108-001	B /B	12	41.1	43.3	36.9	39.7			19.0	20.0

CHEMICAL COMPOSITION IN PERCENT MAXIMUM UNLESS SHOWN AS A RANGE

ALLOY	SILICON	IRON	COPPER	MANGANESE	MAGNESIUM	CHROMIUM	ZINC	TITANIUM
6061	0.40-0.8	0.7	0.15-0.40	0.15	0.8-1.2	0.04-0.35	0.25	0.15

OTH/EACH	OTH/TOT	ALUMINUM
0.05	0.15	REMAINDER

* KIPS PER SQUARE INCH. ONE KIP EQUALS ONE THOUSAND POUNDS.
** WHEN 2 OR MORE TESTS PER RACK ARE MADE, THE HIGHEST AND LOWEST VALUES ARE REPORTED.
*** YIELD STRENGTH IS DETERMINED BY THE 0.2% OFFSET METHOD.

Alcoa Extrusions, Inc.

CMI Quality Assurance Inspection Plan

Checked By: T.A.
Date: 4-25-03
DC Stamp: CM DC
MAP # MP13105
Rev. 0

Proj #	P8645	Description	Feedhorn Block, 10209853, Final Assembly	Part #	10209853	Rev.	X5
Customer	JPL	Total Quantity	1	Serial Numbers		MIL STD -105 LEVEL II SINGLE C=100% M= 1.5 AQL A= 4.0 AQL	

Item #	Characteristic	Seq # No.	Dwg Zone	AQL	Insp Gage Number	Actual/Range	Qty Insp	Qty Acc	Qty Rej	Cert Oper Stamp Date	Insp Stamp Date
5	Record Proj #, S/N's, QTY on QAIP	50		C							
	CMI dwg # 17964										
10	Ø.375±.005 THRU	50	B3	C		.375	1	1	0		5-12-03
15	Ø.688+.000/-.005 ⌖ Ø.004 X-Y-Z	50	C4	C		.689					
20	1.339+.000/-.008	50	E2	C		1.336					
25	1.772±.010	50	C1	C		1.7725					
30	4X R.354±.008	50	B1	C		.350					
35	.7423	50	E5	C		.7426					
40	▱ .0002	50	E6	C		.0001					
45	R.020±.004	50	D4	C		.020					
50	.1973	50	B5	C		1978					
55	// .0002 X	50	E6	C		.0002					
	CMI dwg # 17963										
60	.1420	50	D3	C		ACCEPT	37	37	0		5-12-03
65	.9426	65	D5	C		.9431	37	37	0		5-12-03

CMI Quality Assurance Inspection Plan

Checked By:	DC Stamp	MAP #	Rev.
Date:	CM DC	MP13105	0

Proj #		Description	Feedhorn Block, 10209853, Final Assembly	Part #	10209853	Rev.	X5
Customer	JPL	Total Quantity		Serial Numbers		MIL STD -105 LEVEL II SINGLE C=100% M= 1.5 AQL A= 4.0 AQL	

Item #	Characteristic	Seq # No.	Dwg Zone	AQL	Insp Gage Number	Actual/Range	Qty Insp	Qty Acc	Qty Rej	Cert Oper Stamp Date	Insp Stamp Date
	JPL dwg # 10209853										
70	⌖ Ø0,04 X Y Z	100	D4	C		.032 MAX	1	1	0		5-20-03
75	◎ 0,015 E	100	G10	C		.0025 – .0127	1	1	0		↓
	CMI dwg # 18135										
80	⌓Ø.020 X Y Z All around	118	D4	C		ACCEPT SEE REPORT	1	1	0		5-19-03
85	.7373	118	E5	C		N/A					
90	.1913	118	B6	C		N/A					
	JPL dwg # 10209853										
95	inspect assembly for aluminum, stains, and debris	155		C		Accept	1	1	0	BJ 5/23/03	
100	4X R9	175	D10	C		9.169 8.896 8.943 8.982	1	1	0		5-27-03
105	NS/FS ⌓Ø0,5 A B D All around	175	B11	C		.0376 MAX	↓	↓	↓		↓
110	38,5	175	C11	C		38.576	↓	↓	↓		↓
115	6,5	175	C10	C		6.4977	↓	↓	↓		↓
120	// 0,05 A	175	F10	C		.0113	↓	↓	↓		↓
125	23,611±0,2 (4 corners)	175	E11	C		23.610	↓	↓	↓		↓

CMI Quality Assurance Inspection Plan

Checked By:	DC Stamp	MAP #	Rev.
Date:	CMI DC	MP13105	0

Proj #		Description	Feedhorn Block, 10209853, Final Assembly	Part #	10209853	Rev.	X5

Customer	JPL	Total Quantity		Serial Numbers	MIL STD -105 LEVEL II SINGLE C=100% M= 1.5 AQL A= 4.0 AQL

Item #	Characteristic	Seq # No.	Dwg Zone	AQL	Insp Gage Number	Actual/Range	Qty Insp	Qty Acc	Qty Rej	Cert Oper Stamp Date	Insp Stamp Date
130	//,003 A	175	E10	C		.0041 NCR12251	1	0	1		5-27-03
135	2X 17+0/-0,2	175	C10	C		16.9586 — 16.9917	1	1	0		5-27-03
140	2X R0,5 all around	175	E9	C		.468 — .488	1	1	0		↓
145	3	175	E8	C		3.092	1	1	0		↓
150	1,884+0,02/-0 18 boss points, 18 land points	175	E8	C		1.8781 NCR12251	1	0	1		5-27-03
155	▱ 0,003	175	E8	C		.0030	1	1	0		5-27-03
160	37X Ø2,155/2,145 ~~◎ 0,015 E~~ N/A CHECKED AT MANDREL STAGE	175	G10	C	NCR12251	~~2.1689 — 2.1844~~ 2.1542 — 2.1681	1	0	1		5-27-03
165	Ø0,193/0,188 ⌖ Ø0,04 X Y Z	175	E4	C	NCR12251	.1935 ~~.1876~~ .1874 - .1872 5 MILES O.O.S. .0504 MAX ~~.0481 MAX~~	1	0	1		↓
170	37X 0,2 surface finish	175	E6	C		ACCEPT	1	1	0		5-27-03
175	4X Ø2,25/2 THRU ⌖ Ø0,05 Ⓜ X Y Z	175	D12	C		2.0849 - 2.0906 .0347 MAX	1	1	0		↓
180	2X Ø3,2/3,12 THRU ⌵ Ø3,85/3,6 X 90° M3,5 X 0,35-6H ⌖ Ø0,35 X Y Z	175	H12	C		3.1935 - 3.1948 .0484	1	1	0		↓
185	Ø1,61/1,6 THRU	175	C10	C		1.6002	1	1	0		↓
190	1,6+0,01/-0 ⌖0,1 A B C	175	E1	C		1.6002 ~~.0485~~ .0462	1	1	0		↓

CMI Quality Assurance Inspection Plan	Checked By: Date:	DG Stamp CM DG	MAP # MP13105	Rev. 0

Proj #		Description	Feedhorn Block, 10209853, Final Assembly	Part #	10209853	Rev.	X5
Customer	JPL	Total Quantity		Serial Numbers		MIL STD -105 LEVEL II SINGLE C=100% M= 1.5 AQL A= 4.0 AQL	

Item #	Characteristic	Seq # No.	Dwg Zone	AQL	Insp Gage Number	Actual/Range	Qty Insp	Qty Acc	Qty Rej	Cert Oper Stamp Date	Insp Stamp Date
195	0,5 ⌖0,1 A B C	175	D2	C		.4900 .0583	1	1	0		5-27-03
200	2X R	175	E2	C		ACCEPT	1	1	0		↓
205	Weight parts and record results	175		C		60.4 grams	1	1	0		↓
210	Inspect plating per SP1019, section 6.2	175		C		HOLES PLATED NCR12251	1	0	1		CMI INC 5-27-03
215	Final Inspect as per SP1019	175		C		ACCEPT	1	1	0		CMI 5-27-03

HOUSING

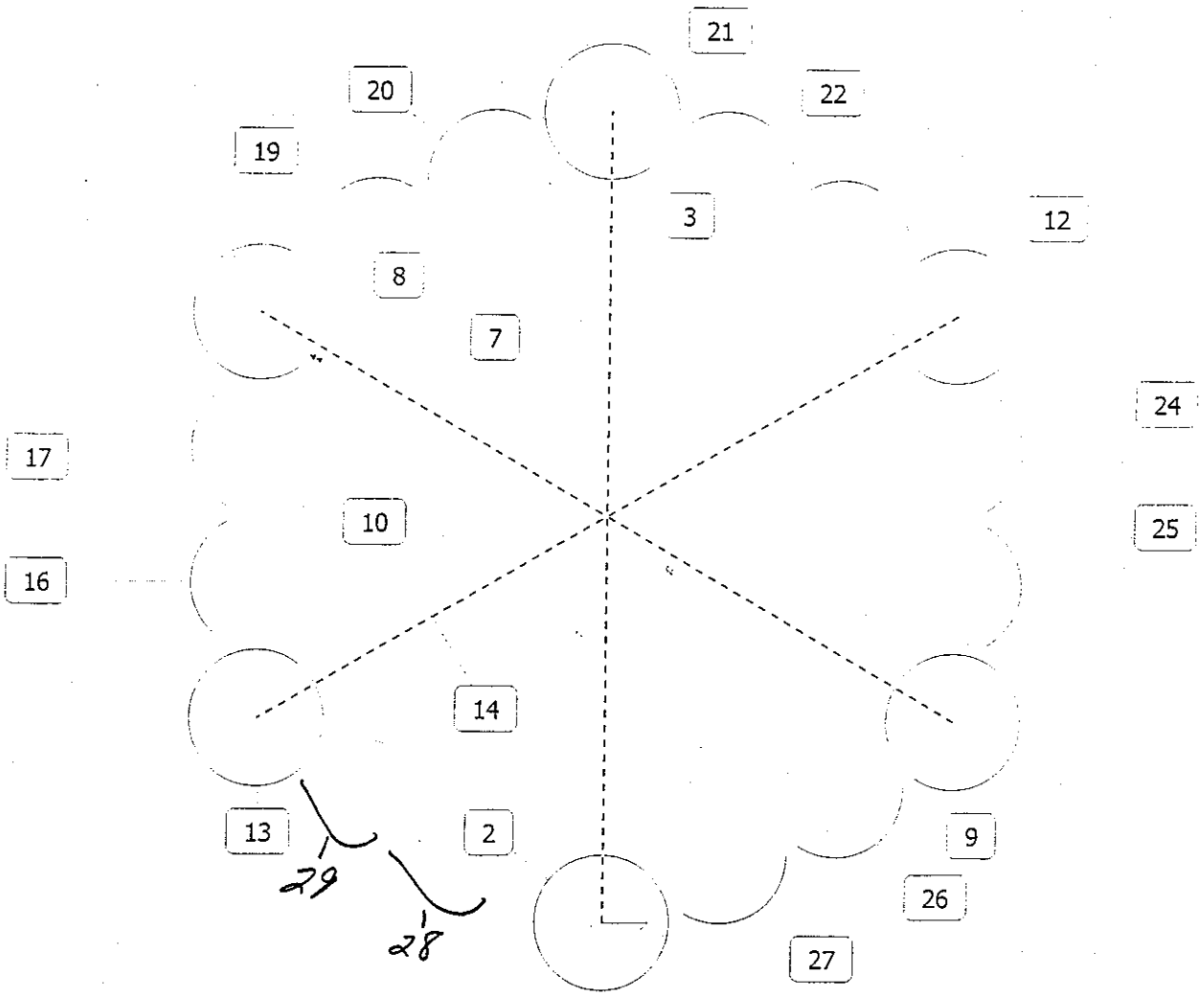

Program: Untitled
Units: in, dec deg

Date: Wed Apr 30 2003 Time: 08:21:02

Feature	Actual	Nominal	Plus (+)	Minus (-)	Dev/Nom	Out/Tol
Circle 2	[MCS]					
Center X	11.16234	11.16234			0.00000	
Center Y	4.60418	4.60418			0.00000	
Diameter	0.08918	0.08918			0.00000	
Circularity	0.00050					
Circle 3	[MCS]					
Center X	11.16270	11.16270			0.00000	
Center Y	5.13754	5.13754			0.00000	
Diameter	0.08903	0.08903			0.00000	
Circularity	0.00055					
Line 5	[MCS]					
Location X	11.16252	11.16252			0.00000	
Location Y	4.87086	4.87086			0.00000	
Length XY	0.53336	0.53336			0.00000	
Direction	-90.0388	-90.0388			0.0000	
System 6	[MCS]					
Origin X	11.16234	11.16234			0.00000	
Origin Y	4.60418	4.60418			0.00000	
Distance 7	[System 6]					
Distance X	0.00000	0.00000			0.00000	
Distance Y	0.53336	0.53336			0.00000	
Distance Z	0.00000	0.00000			0.00000	
Distance XY	0.53336	0.53336			0.00000	
Circle 8	[System 6]					
Center X	-0.23078	-0.23078			0.00000	
Center Y	0.39975	0.39975			0.00000	
Diameter	0.08920	0.08920			0.00000	
Circularity	0.00077					
Circle 9	[System 6]					
Center X	0.23065	0.23065			0.00000	
Center Y	0.13351	0.13351			0.00000	
Diameter	0.08934	0.08934			0.00000	
Circularity	0.00068					
Distance 10	[System 6]					
Distance X	0.46144	0.46144			0.00000	
Distance Y	0.26624	0.26624			0.00000	
Distance Z	0.00000	0.00000			0.00000	
Distance XY	0.53274	0.53274			0.00000	
Circle 12	[System 6]					
Center X	0.23072	0.23072			0.00000	
Center Y	0.40018	0.40018			0.00000	
Diameter	0.08904	0.08904			0.00000	
Circularity	0.00036					
Circle 13	[System 6]					
Center X	-0.23070	-0.23070			0.00000	
Center Y	0.13314	0.13314			0.00000	
Diameter	0.08915	0.08915			0.00000	
Circularity	0.00091					
Distance 14	[System 6]					
Distance X	0.46142	0.46142			0.00000	
Distance Y	0.26704	0.26704			0.00000	
Distance Z	0.00000	0.00000			0.00000	
Distance XY	0.53312	0.53312			0.00000	
Arc 16	[System 6]					
Center X	-0.23047	-0.23047			0.00000	
Center Y	0.22194	0.22194			0.00000	
Radius	0.04477	0.04477			0.00000	
Circularity	0.00032					

Program: Untitled
Units: in, dec deg

Date: Wed Apr 30 2003 Time: 08:21:02

Feature	Actual	Nominal	Plus (+)	Minus (-)	Dev/Nom	Out/Tol
Arc 17	[System 6]					
Center X	-0.23053	-0.23053			0.00000	
Center Y	0.31107	0.31107			0.00000	
Radius	0.04499	0.04499			0.00000	
Circularity	0.00094					
Arc 19	[System 6]					
Center X	-0.15373	-0.15373			0.00000	
Center Y	0.44391	0.44391			0.00000	
Radius	0.04485	0.04485			0.00000	
Circularity	0.00083					
Arc 20	[System 6]					
Center X	-0.07674	-0.07674			0.00000	
Center Y	0.48937	0.48937			0.00000	
Radius	0.04459	0.04459			0.00000	
Circularity	0.00065					
Arc 21	[System 6]					
Center X	0.07703	0.07703			0.00000	
Center Y	0.48911	0.48911			0.00000	
Radius	0.04441	0.04441			0.00000	
Circularity	0.00070					
Arc 22	[System 6]					
Center X	0.15383	0.15383			0.00000	
Center Y	0.44431	0.44431			0.00000	
Radius	0.04477	0.04477			0.00000	
Circularity	0.00066					
Arc 24	[System 6]					
Center X	0.23068	0.23068			0.00000	
Center Y	0.31127	0.31127			0.00000	
Radius	0.04460	0.04460			0.00000	
Circularity	0.00032					
Arc 25	[System 6]					
Center X	0.23072	0.23072			0.00000	
Center Y	0.22244	0.22244			0.00000	
Radius	0.04453	0.04453			0.00000	
Circularity	0.00038					
Arc 26	[System 6]					
Center X	0.15381	0.15381			0.00000	
Center Y	0.08881	0.08881			0.00000	
Radius	0.04447	0.04447			0.00000	
Circularity	0.00043					
Arc 27	[System 6]					
Center X	0.07679	0.07679			0.00000	
Center Y	0.04448	0.04448			0.00000	
Radius	0.04465	0.04465			0.00000	
Circularity	0.00031					
Arc 28	[System 6]					
Center X	-0.07710	-0.07710			0.00000	
Center Y	0.04451	0.04451			0.00000	
Radius	0.04437	0.04437			0.00000	
Circularity	0.00038					
Arc 29	[System 6]					
Center X	-0.15398	-0.15398			0.00000	
Center Y	0.08900	0.08900			0.00000	
Radius	0.04441	0.04441			0.00000	
Circularity	0.00037					

Ø.020

SEQ 118

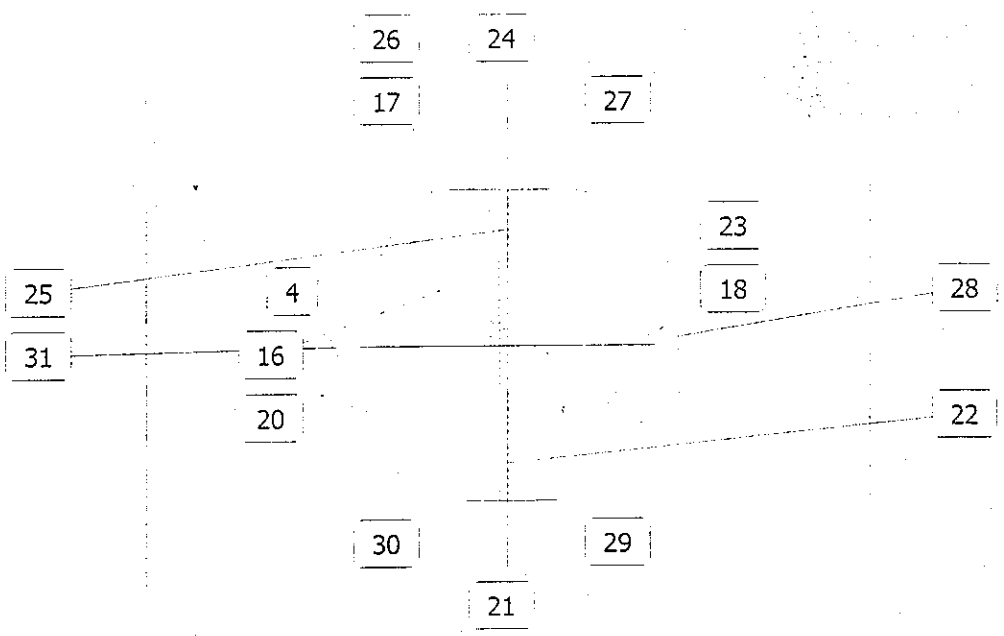

Program: Untitled
Units: in, dec deg

[illegible].020 SEQ 118

Date: Mon May 19 2003 Time: 10:17:25

Feature	Actual	Nominal	Plus (+)	Minus (-)	Dev/Nom	Out/Tol
Distance 16	[System 9]					
Distance Y	0.57062	0.57090	0.01000	0.01000	-0.00028	
Distance 17	[System 9]					
Distance XY	0.57060	0.57090	0.01000	0.01000	-0.00030	
Distance 18	[System 9]					
Distance XY	0.57024	0.57090	0.01000	0.01000	-0.00066	
Distance 20	[System 9]					
Distance XY	0.28705	0.28545	0.00500	0.00500	0.00160	
Distance 21	[System 9]					
Distance XY	0.28548	0.28545	0.00500	0.00500	0.00003	
Distance 22	[System 9]					
Distance XY	0.28362	0.28545	0.00500	0.00500	-0.00183	
Distance 23	[System 9]					
Distance XY	0.28326	0.28545	0.00500	0.00500	-0.00219	
Distance 24	[System 9]					
Distance XY	0.28495	0.28545	0.00500	0.00500	-0.00050	
Distance 25	[System 9]					
Distance XY	0.28695	0.28545	0.00500	0.00500	0.00150	
Arc 26	[System 9]					
Radius	0.08403	0.08850	0.00500	0.00500	-0.00447	
Arc 27	[System 9]					
Radius	0.09055	0.08850	0.00500	0.00500	0.00205	
Arc 28	[System 9]					
Radius	0.08963	0.08850	0.00500	0.00500	0.00113	
Arc 29	[System 9]					
Radius	0.08923	0.08850	0.00500	0.00500	0.00073	
Arc 30	[System 9]					
Radius	0.08953	0.08850	0.00500	0.00500	0.00103	
Arc 31	[System 9]					
Radius	0.08760	0.08850	0.00500	0.00500	-0.00090	

CM DC

JPL FEED HORN, S/SW, BDA 10209853

	DIST FROM DATUM ± .0005	RESULT	Ø AT .1500 DIST FROM DATUM ± .0001	RESULT	Ø AT TRANS. ENTRANCE 1.0996 FROM DAT. ±.0001	RESULT	Ø AT HORN ENTRANCE 1.05693 FROM DATUM ± .0001	RESULT	Ø AT MID HORN - FROM DAT. DIST .60346 .04614	RESULT	RECORD DIMENSION .1000 FROM DAT. ± .0005	RESULT	
#1	1.0996	1.0997	0.0846	.0847	0.0075	.0076	0.0075	.0076	0.04375		0.1000	.1003	
#2	1.0996	1.0997	0.0846	.0848	0.0075	.0076	0.0075	.0076	0.04375		0.1000	.1000	
#3	1.0996	1.0998	0.0846	.0848	0.0075	.0076	0.0075	.0077	0.04375		0.1000	.1002	
~~#4~~	1.0996	1.0996	0.0846	.0850 *	0.0075	.0077	0.0075	.0076	0.04375		0.1000	.1002	SETU
#5	1.0996	1.0995	0.0846	.0848	0.0075	.0076	0.0075	.0075	0.04375		0.1000	.1002	
#6	1.0996	1.0995	0.0846	.0848	0.0075	.0075	0.0075	.0075	0.04375		0.1000	.1000	
#7	1.0996	1.0995	0.0846	.0848	0.0075	.0074	0.0075	.0076	0.04375		0.1000	.1001	
#8	1.0996	1.0995	0.0846	.0847	0.0075	.0076	0.0075	.0076	0.04375		0.1000	.1000	
#9	1.0996	1.0998	0.0846	.0848	0.0075	.0075	0.0075	.0076	0.04375		0.1000	.1003	
#10	1.0996	1.0999	0.0846	.0847	0.0075	.0074	0.0075	.0074	0.04375		0.1000	.1002	
#11	1.0996	1.0998	0.0846	.0847	0.0075	.0074	0.0075	.0074	0.04375		0.1000	.1001	
#12	1.0996	1.0995	0.0846	.0847	0.0075	.0076	0.0075	.0075	0.04375		0.1000	.1000	
#13	1.0996	1.0995	0.0846	.0847	0.0075	.0074	0.0075	.0075	0.04375		0.1000	.1002	
#14	1.0996	1.0995	0.0846	.0847	0.0075	.0076	0.0075	.0074	0.04375		0.1000	.1001	
#15	1.0996	1.0998	0.0846	.0847	0.0075	.0074	0.0075	.0074	0.04375		0.1000	.1000	
#16	1.0996	1.0995	0.0846	.0847	0.0075	.0074	0.0075	.0075	0.04375		0.1000	.1001	
#17	1.0996	1.0996	0.0846	.0847	0.0075	.0074	0.0075	.0075	0.04375		0.1000	.1000	
#18	1.0996	1.0998	0.0846	.0847	0.0075	.0074	0.0075	.0074	0.04375		0.1000	.0999	
#19	1.0996	1.1000	0.0846	.0847	0.0075	.0076	0.0075	.0075	0.04375		0.1000	.0999	
#20	1.0996	1.0997	0.0846	.0847	0.0075	.0075	0.0075	.0074	0.04375		0.1000	.0999	
#21	1.0996	1.0999	0.0846	.0845	0.0075	.0076	0.0075	.0076	0.04375		0.1000	.0998	
#22	1.0996	1.0998	0.0846	.0846	0.0075	.0075	0.0075	.0075	0.04375		0.1000	.1001	
#23	1.0996	1.0996	0.0846	.0847	0.0075	.0075	0.0075	.0075	0.04375		0.1000	.0999	
#24	1.0996	1.1001	0.0846	.0848	0.0075	.0076	0.0075	.0076	0.04375		0.1000	.0999	
#25	1.0996	1.0999	0.0846	.0847	0.0075	.0076	0.0075	.0076	0.04375		0.1000	.0999	
#26	1.0996	1.1001	0.0846	.0847	0.0075	.0076	0.0075	.0076	0.04375		0.1000	.0999	
#27	1.0996	1.1000	0.0846	.0847	0.0075	.0076	0.0075	.0076	0.04375		0.1000	.0999	
#28	1.0996	1.0999	0.0846	.0846	0.0075	.0076	0.0075	.0076	0.04375		0.1000	.0999	
#29	1.0996	1.0998	0.0846	.0847	0.0075	.0076	0.0075	.0076	0.04375		0.1000	.0998	
#30	1.0996	1.0999	0.0846	.0847	0.0075	.0074	0.0075	.0074	0.04375		0.1000	.0998	
#31	1.0996	1.0997	0.0846	.0845	0.0075	.0074	0.0075	.0076	0.04375		0.1000	.0998	
#32	1.0996	1.0999	0.0846	.0847	0.0075	.0075	0.0075	.0076	0.04375		0.1000	.1000	
#33	1.0996	1.0997	0.0846	.0846	0.0075	.0074	0.0075	.0074	0.04375		0.1000	.0998	
#34	1.0996	1.0999	0.0846	.0845	0.0075	.0076	0.0075	.0076	0.04375		0.1000	.0998	
~~#35~~	1.0996	1.1007	0.0846	.0851 X	0.0075	.0076	0.0075	.0076	0.04375		0.1000	.1006	SETUP
#36	1.0996	1.0999	0.0846	.0847	0.0075	.0076	0.0075	.0076	0.04375		0.1000	.0999	
#37	1.0996	1.0999	0.0846	.0847	0.0075	.0075	0.0075	.0075	0.04375		0.1000	.0999	
#38	1.0996	1.0999	0.0846	.0846	0.0075	.0076	0.0075	.0076	0.04375		0.1000	.0998	
#39	1.0996	1.0997	0.0846	.0845	0.0075	.0076	0.0075	.0075	0.04375		0.1000	.0998	
#40	1.0996	1.1000	0.0846	.0846	0.0075	.0075	0.0075	.0076	0.04375		0.1000	.0999	
#41	1.0996	1.0999	0.0846	.0846	0.0075	.0076	0.0075	.0076	0.04375		0.1000	.0997	
~~#42~~	~~1.0996~~	~~1.0998~~	~~0.0846~~	~~.0847~~	~~0.0075~~	~~.0074~~	~~0.0075~~	~~.0075~~	~~0.04375~~		~~0.1000~~	~~.0998~~	SETUP
#43	1.0996	1.0998	0.0846	.0847	0.0075	.0074	0.0075	.0075	0.04375		0.1000	.0998	
#44	1.0996	1.0999	0.0846	.0845	0.0075	.0075	0.0075	.0076	0.04375		0.1000	.0998	
#45	1.0996	1.0998	0.0846	.0847	0.0075	.0075	0.0075	.0076	0.04375		0.1000	.0997	
#46	1.0996	1.0996	0.0846	.0847	0.0075	.0075	0.0075	.0076	0.04375		0.1000	.0998	
#47	1.0996	1.0998	0.0846	.0847	0.0075	.0075	0.0075	.0075	0.04375		0.1000	.1000	
#48	1.0996	1.0996	0.0846	.0847	0.0075	.0076	0.0075	.0076	0.04375		0.1000	.0996	
#49	1.0996	1.0997	0.0846	.0847	0.0075	.0075	0.0075	.0076	0.04375		0.1000	.0997	

CM
DC

#50	1.0996	1.0996	0.0846	.0847	0.0075	.0075	0.0075	.0076	0.04375		0.1000	.1001
#51	1.0996	1.0999	0.0846	.0847	0.0075	.0075	0.0075	.0076	0.04375		0.1000	.1002
#52	1.0996	1.0998	0.0846	.0847	0.0075	.0076	0.0075	.0075	0.04375		0.1000	.1002
#53	1.0996	1.0995	0.0846	.0847	0.0075	.0076	0.0075	.0076	0.04375		0.1000	.1000
#54	1.0996	1.0995	0.0846	.0848	0.0075	.0075	0.0075	.0075	0.04375		0.1000	.1001
#55	1.0996	1.0996	0.0846	.0848	0.0075	.0075	0.0075	.0076	0.04375		0.1000	.0999
#56	1.0996	1.0998	0.0846	.0847	0.0075	.0074	0.0075	.0075	0.04375		0.1000	.1000
#57	1.0996	1.0996	0.0846	.0846	0.0075	.0075	0.0075	.0075	0.04375		0.1000	.1001
#58	1.0996	1.0999	0.0846	.0847	0.0075	.0076	0.0075	.0076	0.04375		0.1000	.1002
#59	1.0996		0.0846		0.0075		0.0075		0.04375		0.1000	
#60	1.0996		0.0846		0.0075		0.0075		0.04375		0.1000	
#61	1.0996		0.0846		0.0075		0.0075		0.04375		0.1000	
#62	1.0996		0.0846		0.0075		0.0075		0.04375		0.1000	
#63	1.0996		0.0846		0.0075		0.0075		0.04375		0.1000	
#64	1.0996		0.0846		0.0075		0.0075		0.04375		0.1000	
#65	1.0996		0.0846		0.0075		0.0075		0.04375		0.1000	
#66	1.0996		0.0846		0.0075		0.0075		0.04375		0.1000	
#67	1.0996		0.0846		0.0075		0.0075		0.04375		0.1000	
#68	1.0996		0.0846		0.0075		0.0075		0.04375		0.1000	
#69	1.0996		0.0846		0.0075		0.0075		0.04375		0.1000	
#70	1.0996		0.0846		0.0075		0.0075		0.04375		0.1000	
#71	1.0996		0.0846		0.0075		0.0075		0.04375		0.1000	
#72	1.0996		0.0846		0.0075		0.0075		0.04375		0.1000	
#73	1.0996		0.0846		0.0075		0.0075		0.04375		0.1000	
#74	1.0996		0.0846		0.0075		0.0075		0.04375		0.1000	
#75	1.0996		0.0846		0.0075		0.0075		0.04375		0.1000	
#76	1.0996		0.0846		0.0075		0.0075		0.04375		0.1000	
#77	1.0996		0.0846		0.0075		0.0075		0.04375		0.1000	
#78	1.0996		0.0846		0.0075		0.0075		0.04375		0.1000	
#79	1.0996		0.0846		0.0075		0.0075		0.04375		0.1000	
#80	1.0996		0.0846		0.0075		0.0075		0.04375		0.1000	
#81	1.0996		0.0846		0.0075		0.0075		0.04375		0.1000	
#82	1.0996		0.0846		0.0075		0.0075		0.04375		0.1000	
#83	1.0996		0.0846		0.0075		0.0075		0.04375		0.1000	
#84	1.0996		0.0846		0.0075		0.0075		0.04375		0.1000	
#85	1.0996		0.0846		0.0075		0.0075		0.04375		0.1000	
#86	1.0996		0.0846		0.0075		0.0075		0.04375		0.1000	
#87	1.0996		0.0846		0.0075		0.0075		0.04375		0.1000	
#88	1.0996		0.0846		0.0075		0.0075		0.04375		0.1000	
#89	1.0996		0.0846		0.0075		0.0075		0.04375		0.1000	
#90	1.0996		0.0846		0.0075		0.0075		0.04375		0.1000	
#91	1.0996		0.0846		0.0075		0.0075		0.04375		0.1000	
#92	1.0996		0.0846		0.0075		0.0075		0.04375		0.1000	
#93	1.0996		0.0846		0.0075		0.0075		0.04375		0.1000	
#94	1.0996		0.0846		0.0075		0.0075		0.04375		0.1000	
#95	1.0996		0.0846		0.0075		0.0075		0.04375		0.1000	
#96	1.0996		0.0846		0.0075		0.0075		0.04375		0.1000	
#97	1.0996		0.0846		0.0075		0.0075		0.04375		0.1000	
#98	1.0996		0.0846		0.0075		0.0075		0.04375		0.1000	
#99	1.0996		0.0846		0.0075		0.0075		0.04375		0.1000	
#100	1.0996		0.0846		0.0075		0.0075		0.04375		0.1000	
#101	1.0996		0.0846		0.0075		0.0075		0.04375		0.1000	
#102	1.0996		0.0846		0.0075		0.0075		0.04375		0.1000	
#103	1.0996		0.0846		0.0075		0.0075		0.04375		0.1000	
#104	1.0996		0.0846		0.0075		0.0075		0.04375		0.1000	
#105	1.0996		0.0846		0.0075		0.0075		0.04375		0.1000	

MANDREL INSIDE ELECTROFORM
AFTER MACHINING

	(0)
1.	.0019 –
2.	.00080 –
3.	.00054
4.	.00031
5.	.00093 –
6.	.0006
7.	.0006
8.	.00222 –
9.	.00072 –
10.	.00067
11.	.00012
12.	.00030
13.	.00044
14.	.00035
15.	.00131 –
16.	.00026 –
17.	.00120 –
18	.00033
19	.00075 –
20	.00050
21.	.00032
22.	.00039
23.	.00097 –
24.	.00015
25.	.00064
26	.00152 –
27	.00062
28	.00060
29	.00029
30	.00055
31	.00049
32	.00078
33	.00025
34	.00047
35	.00045
36.	.00047
~~37~~	~~.00082 NEW STEM?~~
37	.00032
38	.00060
39	.00069
40	.00010
41	.00014
42	.00049
43	.00063
44	.00106
45	.0015
46	.00103
47	.00115
48	.00082

CIRCLED MANDRELS WERE NOT USED IN PART

FINAL
27 MAY 2003

SMALL HOLES & FLANGE PATTERN

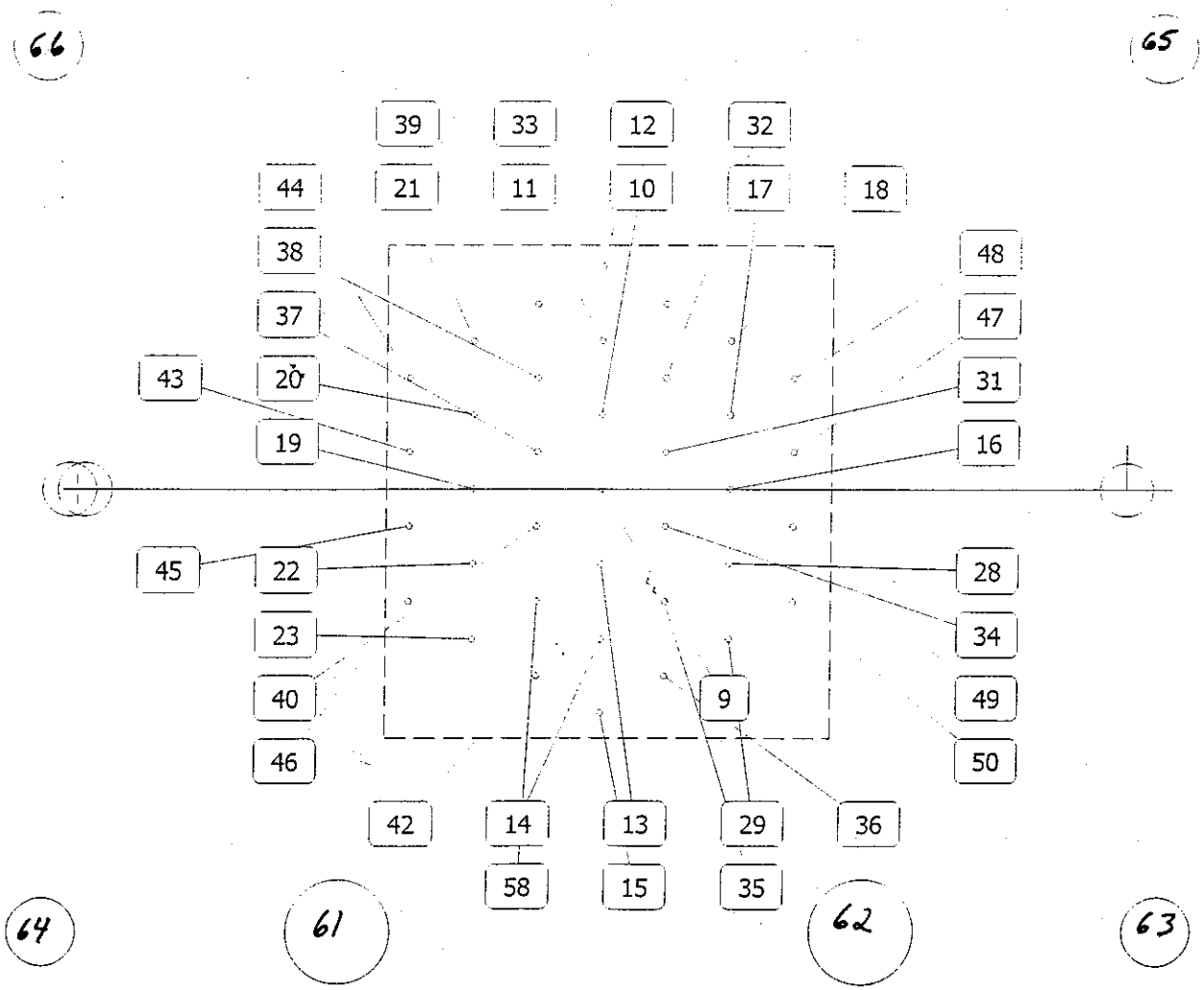

Program: Feedhorn block 37 final inspect with datums 3.iwp Date: Tue May 27 2003 Time: 09:04:14
Units: mm, dec deg

Feature	Actual	Nominal	Plus (+)	Minus (-)	Dev/Nom	Out/Tol
Circle 9	[System 8]					
Diameter	0.1888	0.1880	0.0050	0.0000	0.0008	
Circularity	0.0037		0.0100			
TP RFS	0.0205		0.0400			
Circle 10	[System 8]					
Diameter	0.1889	0.1880	0.0050	0.0000	0.0009	
Circularity	0.0057		0.0100			
TP RFS	0.0332		0.0400			
Circle 11	[System 8]					
Diameter	0.1923	0.1880	0.0050	0.0000	0.0043	
Circularity	0.0040		0.0100			
TP RFS	0.0405		0.0400			0.0005
Circle 12	[System 8]					
Diameter	0.1928	0.1880	0.0050	0.0000	0.0048	
Circularity	0.0052		0.0100			
TP RFS	0.0325		0.0400			
Circle 13	[System 8]					
Diameter	0.1888	0.1880	0.0050	0.0000	0.0008	
Circularity	0.0015		0.0100			
TP RFS	0.0057		0.0400			
Circle 14	[System 8]					
Diameter	0.1888	0.1880	0.0050	0.0000	0.0008	
Circularity	0.0014		0.0100			
TP RFS	0.0251		0.0400			
Circle 15	[System 8]					
Diameter	0.1895	0.1880	0.0050	0.0000	0.0015	
Circularity	0.0035		0.0100			
TP RFS	0.0331		0.0400			
Circle 16	[System 8]					
Diameter	0.1900	0.1880	0.0050	0.0000	0.0020	
Circularity	0.0044		0.0100			
TP RFS	0.0278		0.0400			
Circle 17	[System 8]					
Diameter	0.1881	0.1880	0.0050	0.0000	0.0001	
Circularity	0.0020		0.0100			
TP RFS	0.0090		0.0400			
Circle 18	[System 8]					
Diameter	0.1893	0.1880	0.0050	0.0000	0.0013	
Circularity	0.0033		0.0100			
TP RFS	0.0278		0.0400			
Circle 19	[System 8]					
Diameter	0.1895	0.1880	0.0050	0.0000	0.0015	
Circularity	0.0029		0.0100			
TP RFS	0.0293		0.0400			
Circle 20	[System 8]					
Diameter	0.1905	0.1880	0.0050	0.0000	0.0025	
Circularity	0.0030		0.0100			
TP RFS	0.0337		0.0400			
Circle 21	[System 8]					
Diameter	0.1910	0.1880	0.0050	0.0000	0.0030	
Circularity	0.0024		0.0100			
TP RFS	0.0189		0.0400			

Program: Feedhorn block 37 final inspect with datums 3.iwp Date: Tue May 27 2003 Time: 09:04:14
Units: mm, dec deg

Feature	Actual	Nominal	Plus (+)	Minus (-)	Dev/Nom	Out/Tol
Circle 22	[System 8]					
Diameter	0.1902	0.1880	0.0050	0.0000	0.0022	
Circularity	0.0024		0.0100			
TP RFS	0.0326		0.0400			
Circle 23	[System 8]					
Diameter	0.1911	0.1880	0.0050	0.0000	0.0031	
Circularity	0.0038		0.0100			
TP RFS	0.0247		0.0400			
Circle 28	[System 8]					
Diameter	0.1893	0.1880	0.0050	0.0000	0.0013	
Circularity	0.0033		0.0100			
TP RFS	0.0302		0.0400			
Circle 29	[System 8]					
Diameter	0.1895	0.1880	0.0050	0.0000	0.0015	
Circularity	0.0040		0.0100			
TP RFS	0.0249		0.0400			
Circle 31	[System 8]					
Diameter	0.1872	0.1880	0.0050	0.0000	-0.0008	-0.0008
Circularity	0.0041		0.0100			
TP RFS	0.0175		0.0400			
Circle 32	[System 8]					
Diameter	0.1891	0.1880	0.0050	0.0000	0.0011	
Circularity	0.0020		0.0100			
TP RFS	0.0252		0.0400			
Circle 33	[System 8]					
Diameter	0.1900	0.1880	0.0050	0.0000	0.0020	
Circularity	0.0044		0.0100			
TP RFS	0.0249		0.0400			
Circle 34	[System 8]					
Diameter	0.1916	0.1880	0.0050	0.0000	0.0036	
Circularity	0.0022		0.0100			
TP RFS	0.0242		0.0400			
Circle 35	[System 8]					
Diameter	0.1901	0.1880	0.0050	0.0000	0.0021	
Circularity	0.0027		0.0100			
TP RFS	0.0129		0.0400			
Circle 36	[System 8]					
Diameter	0.1874	0.1880	0.0050	0.0000	-0.0006	-0.0006
Circularity	0.0033		0.0100			
TP RFS	0.0276		0.0400			
Circle 37	[System 8]					
Diameter	0.1915	0.1880	0.0050	0.0000	0.0035	
Circularity	0.0014		0.0100			
TP RFS	0.0458		0.0400			0.0058
Circle 38	[System 8]					
Diameter	0.1912	0.1880	0.0050	0.0000	0.0032	
Circularity	0.0030		0.0100			
TP RFS	0.0334		0.0400			
Circle 39	[System 8]					
Diameter	0.1890	0.1880	0.0050	0.0000	0.0010	
Circularity	0.0018		0.0100			
TP RFS	0.0140		0.0400			

Program: Feedhorn block 37 final inspect with datums 3.iwp Date: Tue May 27 2003 Time: 09:04:14
Units: mm, dec deg

Feature	Actual	Nominal	Plus (+)	Minus (-)	Dev/Nom	Out/Tol
Circle 40	[System 8]					
Diameter	0.1893	0.1880	0.0050	0.0000	0.0013	
Circularity	0.0034		0.0100			
TP RFS	0.0212		0.0400			
Circle 42	[System 8]					
Diameter	0.1935	0.1880	0.0050	0.0000	0.0055	0.0005
Circularity	0.0042		0.0100			
TP RFS	0.0468		0.0400			0.0068
Circle 43	[System 8]					
Diameter	0.1901	0.1880	0.0050	0.0000	0.0021	
Circularity	0.0041		0.0100			
TP RFS	0.0420		0.0400			0.0020
Circle 44	[System 8]					
Diameter	0.1892	0.1880	0.0050	0.0000	0.0012	
Circularity	0.0032		0.0100			
TP RFS	0.0238		0.0400			
Circle 45	[System 8]					
Diameter	0.1892	0.1880	0.0050	0.0000	0.0012	
Circularity	0.0057		0.0100			
TP RFS	0.0288		0.0400			
Circle 46	[System 8]					
Diameter	0.1909	0.1880	0.0050	0.0000	0.0029	
Circularity	0.0044		0.0100			
TP RFS	0.0240		0.0400			
Circle 47	[System 8]					
Diameter	0.1898	0.1880	0.0050	0.0000	0.0018	
Circularity	0.0067		0.0100			
TP RFS	0.0222		0.0400			
Circle 48	[System 8]					
Diameter	0.1916	0.1880	0.0050	0.0000	0.0036	
Circularity	0.0076		0.0100			
TP RFS	0.0180		0.0400			
Circle 49	[System 8]					
Diameter	0.1928	0.1880	0.0050	0.0000	0.0048	
Circularity	0.0074		0.0100			
TP RFS	0.0095		0.0400			
Circle 50	[System 8]					
Diameter	0.1915	0.1880	0.0050	0.0000	0.0035	
Circularity	0.0050		0.0100			
TP RFS	0.0113		0.0400			
Circle 58	[System 8]					
Diameter	0.1892	0.1880	0.0050	0.0000	0.0012	
Circularity	0.0029		0.0100			
TP RFS	0.0504		0.0400			0.0104

Program: Feedhorn block 37 final inspect with datums.iwp Date: Sat May 24 2003 Time: 12:03:04
Units: mm, dec deg

Feature	Actual	Nominal	Plus (+)	Minus (-)	Dev/Nom	Out/Tol
Circle 64	[System 8]					
Diameter	2.0849	2.0000	0.2500	0.0000	0.0849	
TP RFS	0.0318		0.0500			
TP MMC	0.0318		0.0500		-0.0531	
Circle 65	[System 8]					
Diameter	2.0906	2.0000	0.2500	0.0000	0.0906	
TP RFS	0.0304		0.0500			
TP MMC	0.0304		0.0500		-0.0602	
Circle 66	[System 8]					
Diameter	2.0880	2.0000	0.2500	0.0000	0.0880	
TP RFS	0.0235		0.0500			
TP MMC	0.0235		0.0500		-0.0646	

Circle 61	[System 8]					
Diameter	3.1948	3.1200	0.0800	0.0000	0.0748	
TP RFS	0.0484		0.3500			
Circle 62	[System 8]					
Diameter	3.1935	3.1200	0.0800	0.0000	0.0735	
TP RFS	0.0479		0.3500			
Circle 63	[System 8]					
Diameter	2.0892	2.0000	0.2500	0.0000	0.0892	
TP RFS	0.0347		0.0500			
TP MMC	0.0347		0.0500		-0.0545	

FINAL

27 MAY 2003

LARGE DIAMETERS

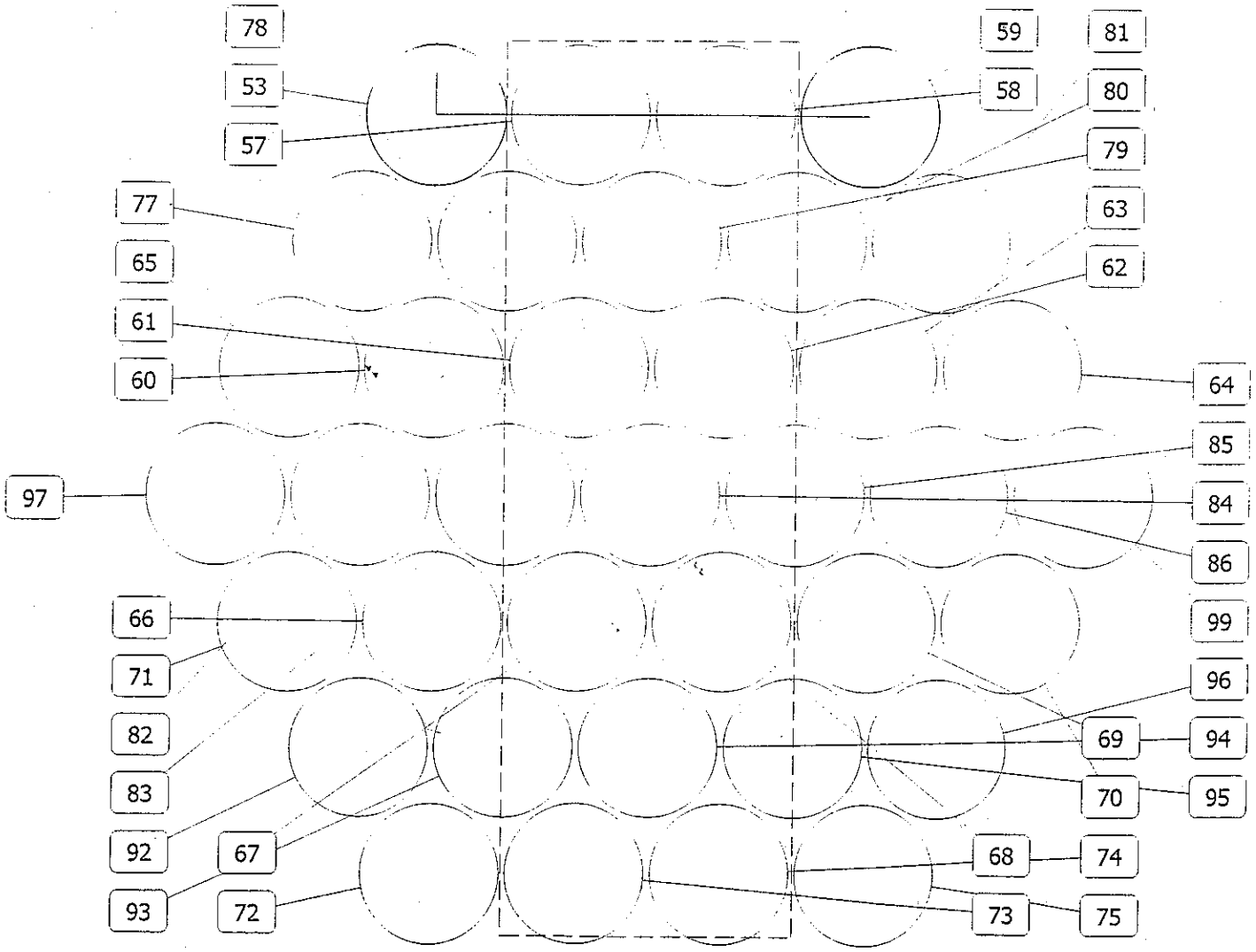

LARGE DIAMETERS

Program: Feedhorn block 37 large hole side final 2.iwp Date Tue May 27 2003 Time: 10:01:56
Units: mm, dec deg

Feature	Actual	Nominal	Plus (+)	Minus (-)	Dev/Nom	Out/Tol
Circle 53 Diameter	[System 52] 2.1698	2.1500	0.0050	0.0050	0.0198	0.0148
Circle 57 Diameter	[System 52] 2.1596	2.1500	0.0050	0.0050	0.0096	0.004
Circle 58 Diameter	[System 52] 2.1623	2.1500	0.0050	0.0050	0.0123	0.007
Circle 59 Diameter	System 52] 2.1636	2.1500	0.0050	0.0050	0.0136	0.0086
Circle 60 Diameter	[System 52] 2.1674	2.1500	0.0050	0.0050	0.0174	0.0124
Circle 61 Diameter	[System 52] 2.1634	2.1500	0.0050	0.0050	0.0134	0.0084
Circle 62 Diameter	[System 52] 2.1664	2.1500	0.0050	0.0050	0.0164	0.0114
Circle 63 Diameter	[System 52] 2.1577	2.1500	0.0050	0.0050	0.0077	0.0027
Circle 64 Diameter	System 52] 2.1608	2.1500	0.0050	0.0050	0.0108	0.0058
Circle 65 Diameter	[System 52] 2.1649	2.1500	0.0050	0.0050	0.0149	0.0099
Circle 66 Diameter	[System 52] 2.1590	2.1500	0.0050	0.0050	0.0090	0.0040
Circle 67 Diameter	[System 52] 2.1607	2.1500	0.0050	0.0050	0.0107	0.0057
Circle 68 Diameter	System 52] 2.1641	2.1500	0.0050	0.0050	0.0141	0.0091
Circle 69 Diameter	[System 52] 2.1618	2.1500	0.0050	0.0050	0.0118	0.0068
Circle 70 Diameter	[System 52] 2.1637	2.1500	0.0050	0.0050	0.0137	0.0087
Circle 71 Diameter	[System 52] 2.1615	2.1500	0.0050	0.0050	0.0115	0.0065
Circle 72 Diameter	[System 52] 2.1647	2.1500	0.0050	0.0050	0.0147	0.0097
Circle 73 Diameter	[System 52] 2.1597	2.1500	0.0050	0.0050	0.0097	0.0047
Circle 74 Diameter	[System 52] 2.1622	2.1500	0.0050	0.0050	0.0122	0.0072
Circle 75 Diameter	[System 52] 2.1673	2.1500	0.0050	0.0050	0.0173	0.0123
Circle 77 Diameter	[System 52] 2.1681	2.1500	0.0050	0.0050	0.0181	0.0131
Circle 78 Diameter	[System 52] 2.1629	2.1500	0.0050	0.0050	0.0129	0.0079
Circle 79 Diameter	[System 52] 2.1613	2.1500	0.0050	0.0050	0.0113	0.0063

LARGE DIAMETERS

Program: Feedhorn block 37 large hole side final 2.iwp Date: Tue May 27 2003 Time: 10:01:56
Units: mm, dec deg

Feature	Actual	Nominal	Plus (+)	Minus (-)	Dev/Nom	Out/Tol
Circle 80 Diameter	[System 52] 2.1646	2.1500	0.0050	0.0050	0.0146	0.0096
Circle 81 Diameter	[System 52] 2.1618	2.1500	0.0050	0.0050	0.0118	0.0068
Circle 82 Diameter	[System 52] 2.1642	2.1500	0.0050	0.0050	0.0142	0.0092
Circle 83 Diameter	[System 52] 2.1596	2.1500	0.0050	0.0050	0.0096	0.0046
Circle 84 Diameter	[System 52] 2.1659	2.1500	0.0050	0.0050	0.0159	0.0109
Circle 85 Diameter	[System 52] 2.1615	2.1500	0.0050	0.0050	0.0115	0.0065
Circle 86 Diameter	[System 52] 2.1573	2.1500	0.0050	0.0050	0.0073	0.0023
Circle 92 Diameter	[System 52] 2.1608	2.1500	0.0050	0.0050	0.0108	0.0058
Circle 93 Diameter	[System 52] 2.1608	2.1500	0.0050	0.0050	0.0108	0.0058
Circle 94 Diameter	[System 52] 2.1565	2.1500	0.0050	0.0050	0.0065	0.0015
Circle 95 Diameter	[System 52] 2.1613	2.1500	0.0050	0.0050	0.0113	0.0063
Circle 96 Diameter	[System 52] 2.1569	2.1500	0.0050	0.0050	0.0069	0.0019
Circle 97 Diameter	[System 52] 2.1551	2.1500	0.0050	0.0050	0.0051	0.0001
Circle 99 Diameter	[System 52] 2.1542	2.1500	0.0050	0.0050	0.0042	

End Item Data Package (EIDP)

SPIRE - 300mK Spectrometer Filters - PFM

SPIRE Ref.: SPIRE-UCF-
Cardiff Ref.: HSO-CDF-EIDP-055 Issue 1.0
10 October 2003

Prepared by: Peter Hargrave

Approved by:

Distribution list

Astronomy Instrumentation Group,
Department of Physics & Astronomy,
University of Wales, Cardiff,
5 The Parade,
Cardiff
CF24 3YB
+44 (0)2920 876682

Change Record

Issue	Section	Date	Changes

Table of contents

Section	Contents	Req.	Comments
1	Shipping Documents	X	
2	Transportation, Packing, Handling & Integration Procedures	X	
3	Certificate of Conformance / Delivery Review Board MoM Ai-Lists	X	
4	Qualification Status List / Test Matrix	X	
5	Top Level Drawings (inc. Family Tree)		
6	Interface Drawings	X	
7	Functional, Block & Mechanical Drawings		
8	Electrical Circuit Drawings		
9	As Built Parts List	X	
10	Serialised Components List		
11	List of Waivers		
12	Copies of Waivers		
13	Operational Manual		
14	Historical Record	X	
15	Logbook / Diary of Events	X	
16	Operating Time / Cycle Record	X	
17	Connector Mating Record		
18	Age Sensitive Items Record		
19	Pressure Vessel History / Test Record		
20	Calibration Data Record	X	
21	Temporary Installation Record	X	
22	Open Work / Deferred Work / Open Tests	X	
23	List of Non-Conformance Reports	X	
24	Copies of Non-Conformance Reports	X	
25	Test Reports	X	
26	Proof Load Certificates		
27	Reference List of EIDP's		

	(Lower Level / Associated)		
28	Mass Records / Power Budget	**X**	
29	Cleanliness Statement	**X**	
30	Other Useful Information	**X**	

This page is intentionally blank

SECTION 01 - Shipping Documents

SECTION 02 - Transportation, Packing, Handling & Integration Procedures

This package contains flight hardware.
To be opened only by authorised SPIRE personnel in clean room conditions.
Do not touch filter surface.
Handle only by Aluminium frame.
To be integrated to SPIRE CQM PLW BDA according to JPL procedure.

Hand over to JPL Cognisant Engineer – Mark Weilert

Mark Weilert
M/S 79-24
Jet Propulsion Laboratory
4800 Oak Grove Dr.
Pasadena Ca 91109-8099

Mark.A.Weilert@jpl.nasa.gov
office: (818) 354-5060
fax: (818) 393-4878

SECTION 03 - Certificate of Conformance

Cardiff University Astronomy Instrumentation Group hereby certifies that the following equipment,	
Spacecraft / Project:	**Herschel**
Instrument:	**SPIRE**
Model:	**PFM**
Subsystem:	**300mK SLW and SSW filter stacks**
Serial No:	**FILT-PFM-210, FILT-PFM-220**
As described in this End Item Data Package: **HSO-CDF-EIDP-055**	
Complies with the requirements set out in: **SPIRE-RAL-PRJ-000034**	

Responsible Authority		***Signature***
Cardiff Filter Management	Prof P.A.R.Ade	
	Dr C.E.Tucker	
Cardiff Product Assurance	Dr I.Walker	
Cardiff SPIRE Management	Dr P.Hargrave	

SECTION 04 - Qualification Status List / Compliance Matrix

Test	Status		Test Institute
	PFM-SLW FILT-PFM-210	PFM-SSW FILT-PFM-220	
Spectral behaviour - Near-band transmission	Tested at component level. Compliant.	Tested at component and assembly level. Compliant.	UWC
Spectral behaviour - out-of-band blocking, at λ<15μm	Open test. Off-cuts to be tested once facility commissioned	Open test. Off-cuts to be tested once facility commissioned	UWC
Dimension and tolerances to specification	Compliant	Compliant	UWC
Filter flatness	Compliant	Compliant	UWC
Inspection for surface defects	Passed	Passed	UWC
Mass	Compliant	Compliant	
Thermal cycling (5 cycles 300K-77K-300K)	Passed	Passed	UWC
Cold vibration	Not tested	Not tested	RAL
Environmental condition - Vacuum $3x10^{-1}$mBar	Passed	Passed	UWC
Differential pressure (a pumping-out rate of 10mB/sec)	Passed	Passed	UWC
Pre-bake out (not exceeding 80˚C)	Passed	Passed	UWC
Outgassing	Test not performed. All materials used within ESA / NASA specifications	Test not performed. All materials used within ESA / NASA specifications	
Cleanliness checks, by visual inspection.	Passed	Passed	UWC
Degradation due to high energy radiation.	Not tested	Not tested	

SECTION 05 - Top Level Drawings (Inc. Family Tree)

TOP LEVEL DRAWING LIST

Drawing No.	Title
FILT-CQM/PFM-200-03.001	300mK Filter Assembly

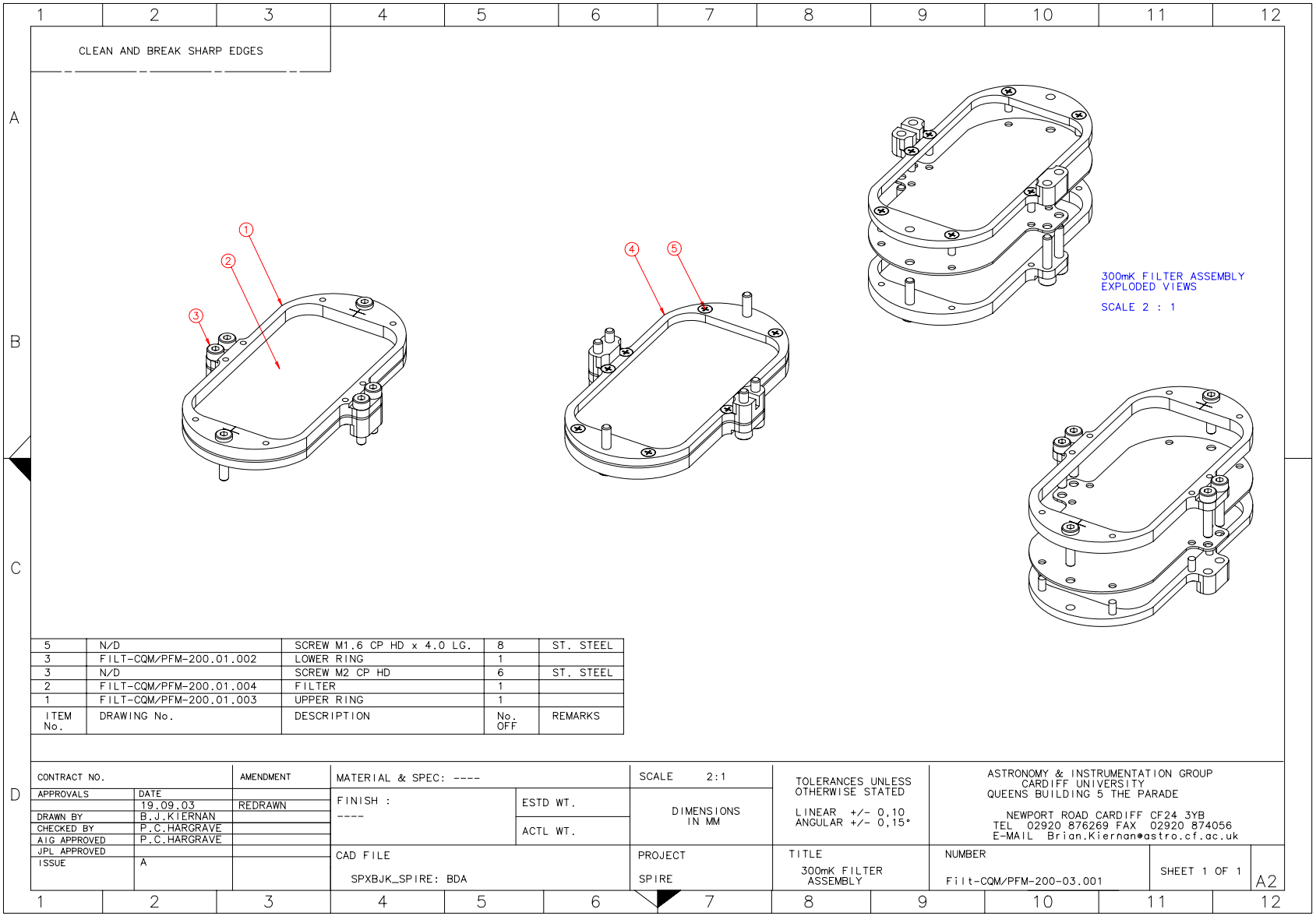

Figure 1 300mK filter stack assembly

SECTION 06 - Interface Drawings

INTERFACE DRAWING LIST

Drawing No.	Title
FILT-CQM/PFM-200	300mK Filter ICD

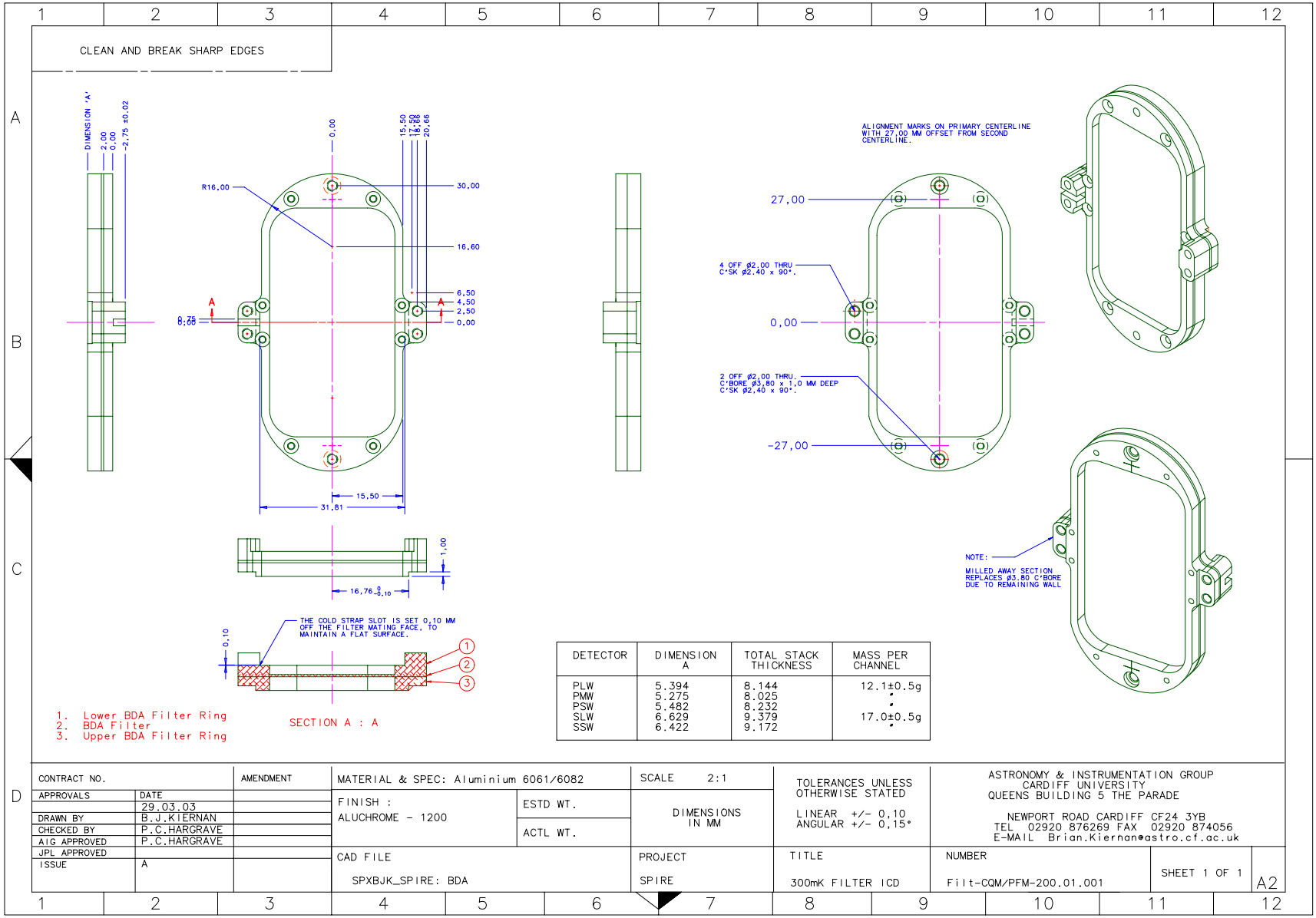

DETECTOR	DIMENSION A	TOTAL STACK THICKNESS	MASS PER CHANNEL
PLW	5.394	8.144	12.1±0.5g
PMW	5.275	8.025	"
PSW	5.482	8.232	"
SLW	6.629	9.379	17.0±0.5g
SSW	6.422	9.172	"

Figure 2 Interface drawing for 300mK filters

SECTION 07 - Functional, Block & Mechanical Drawings

Component drawings are given in this section. Also shown, for illustration purposes, are details of the mounting of the HDPE lens for each filter stack assembly.

FUNCTIONAL & BLOCK DRAWING LIST

Drawing No.	Title

MECHANICAL COMPONENT DRAWING LIST

Drawing No.	Title
FILT-CQM/PFM-200-01-004	300mK Filter
FILT-CQM/PFM-200-01-003	300mK Filter Upper Ring
FILT-CQM/PFM-200-01-002	300mK Filter Lower Ring
FILT-CQM/PFM-200-02-001	300mK Spectrometer Lens

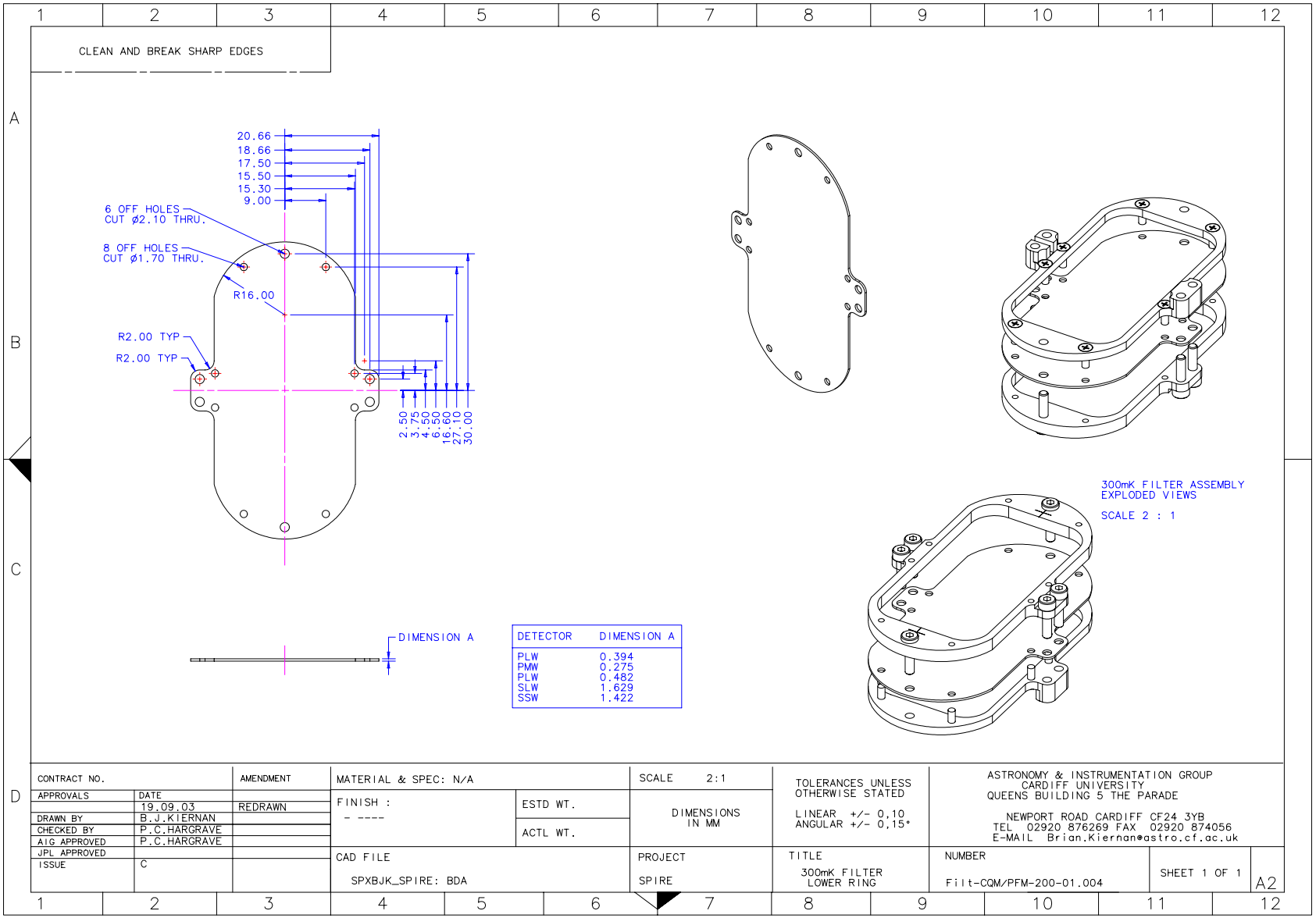

DETECTOR	DIMENSION A
PLW	0.394
PMW	0.275
PLW	0.482
SLW	1.629
SSW	1.422

Figure 3 300mK Filter

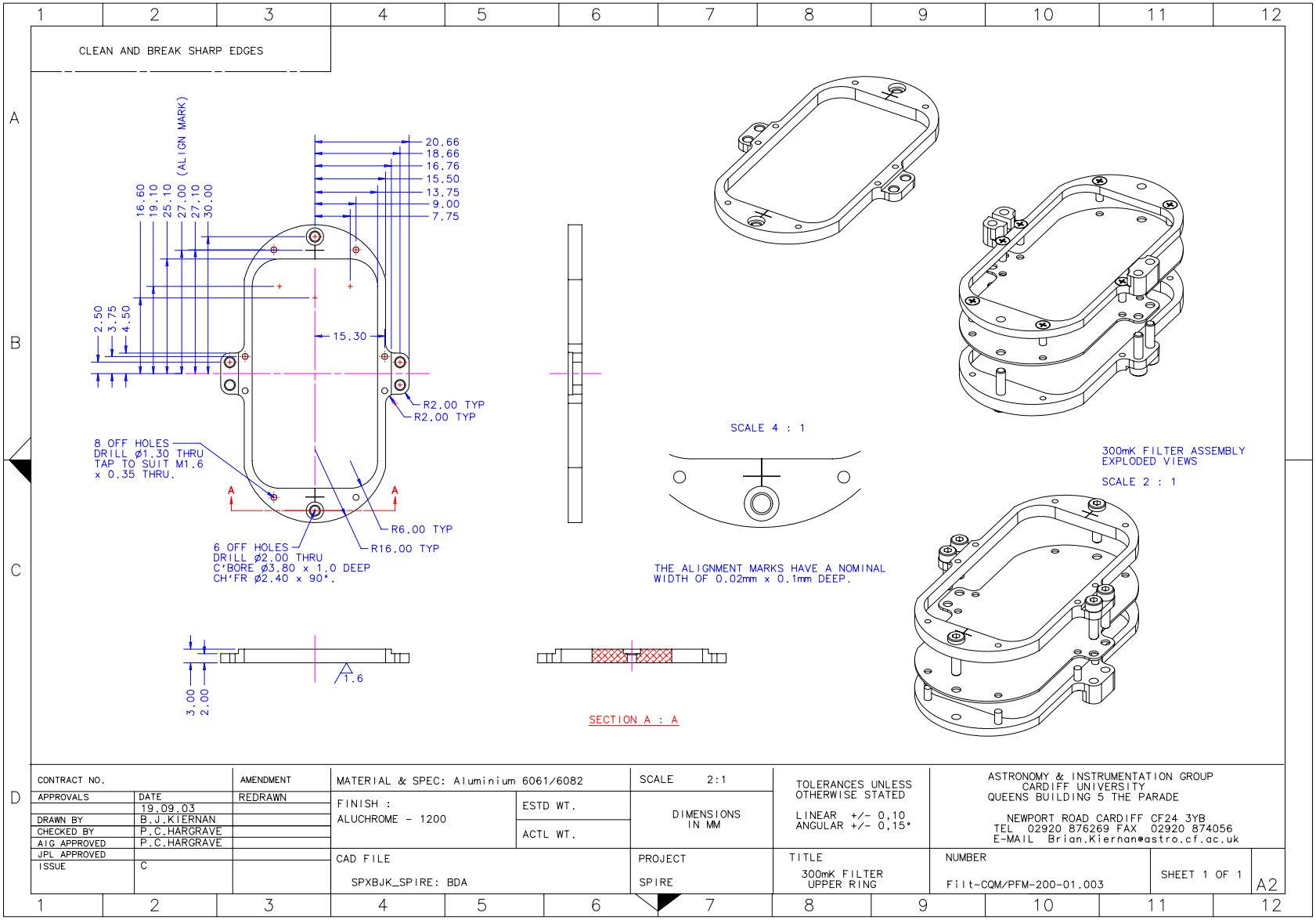

Figure 4 300mK Filter Upper Ring

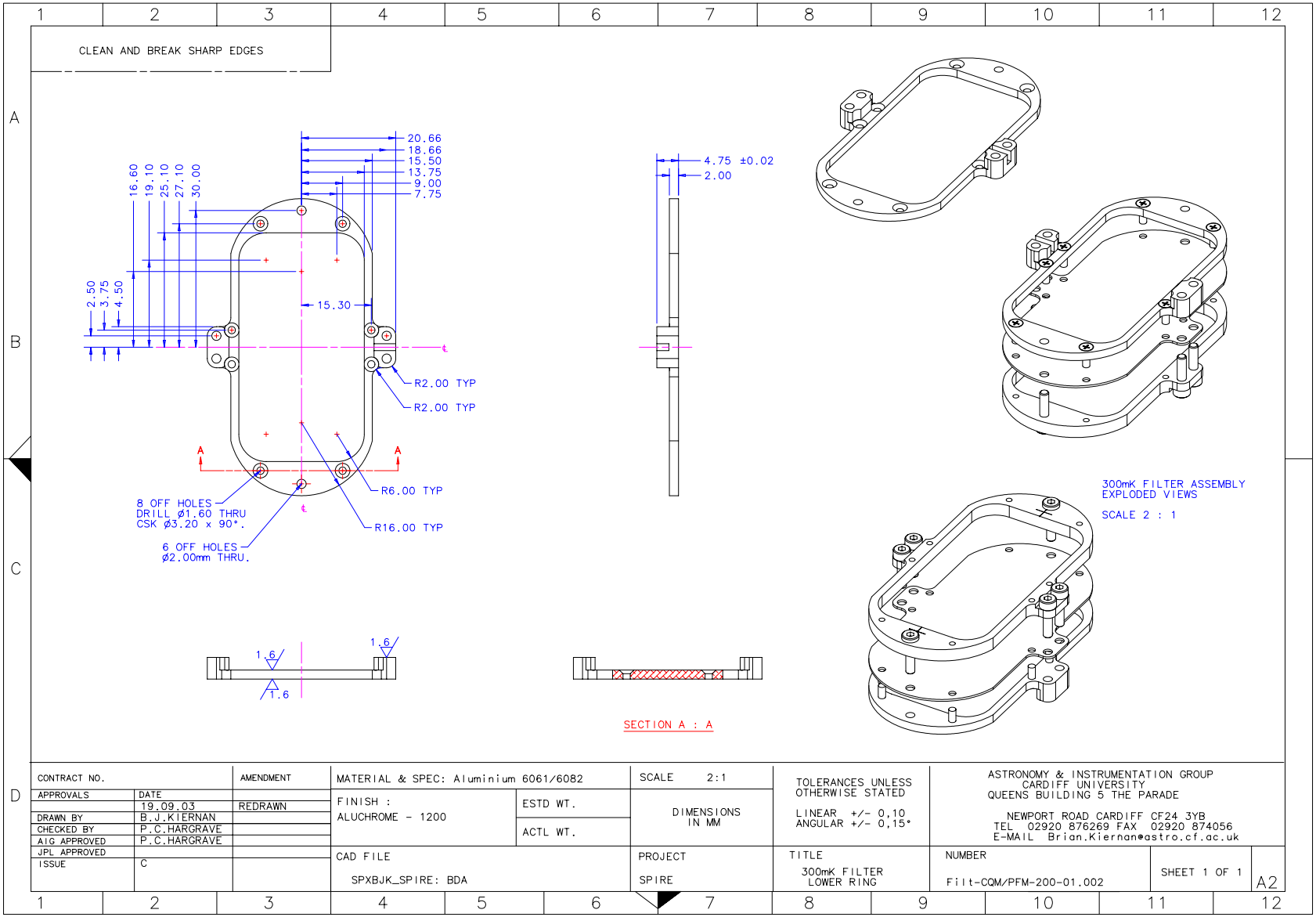

Figure 5 300mK Filter Lower Ring

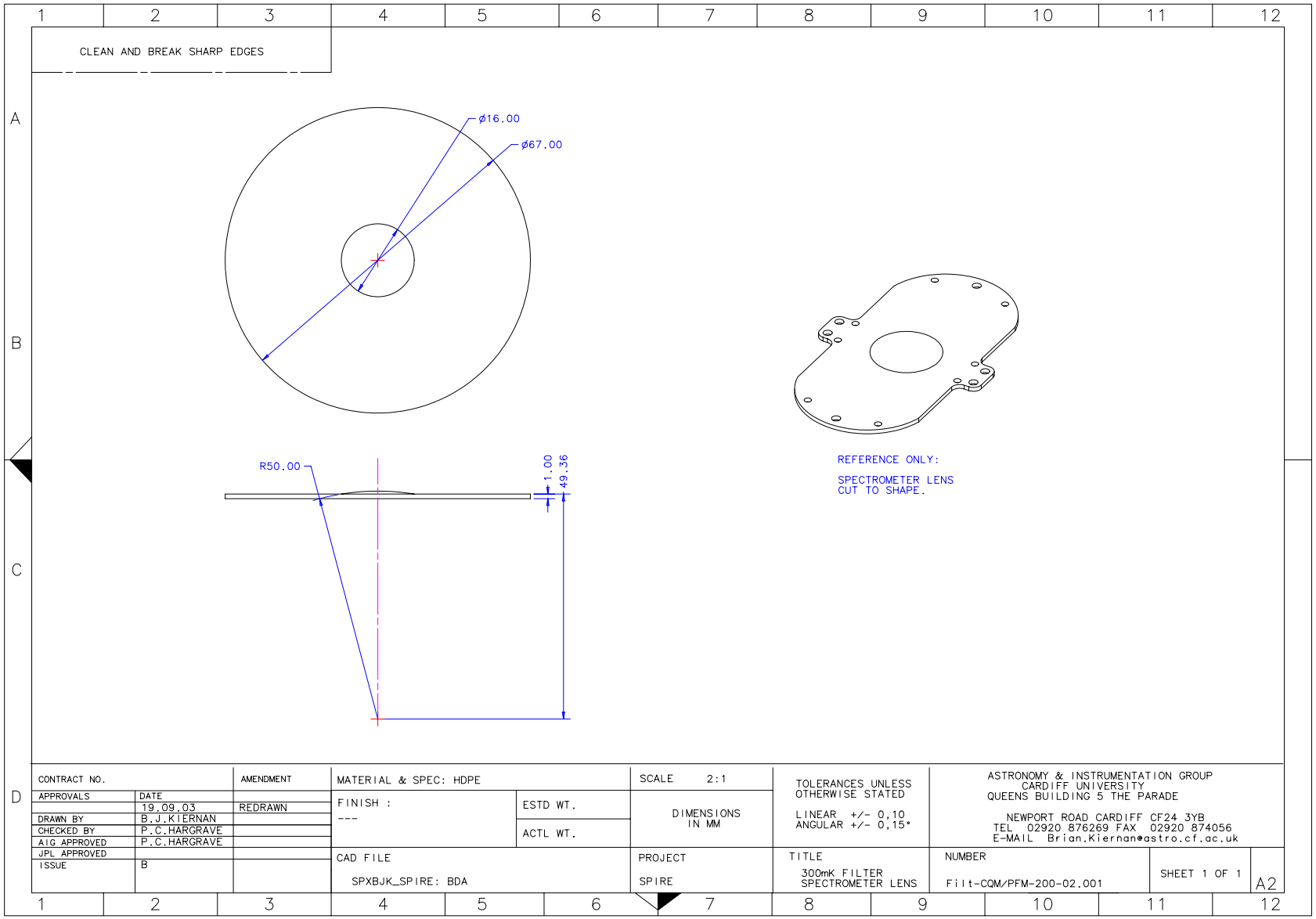

Figure 6 300mK Spectrometer lens

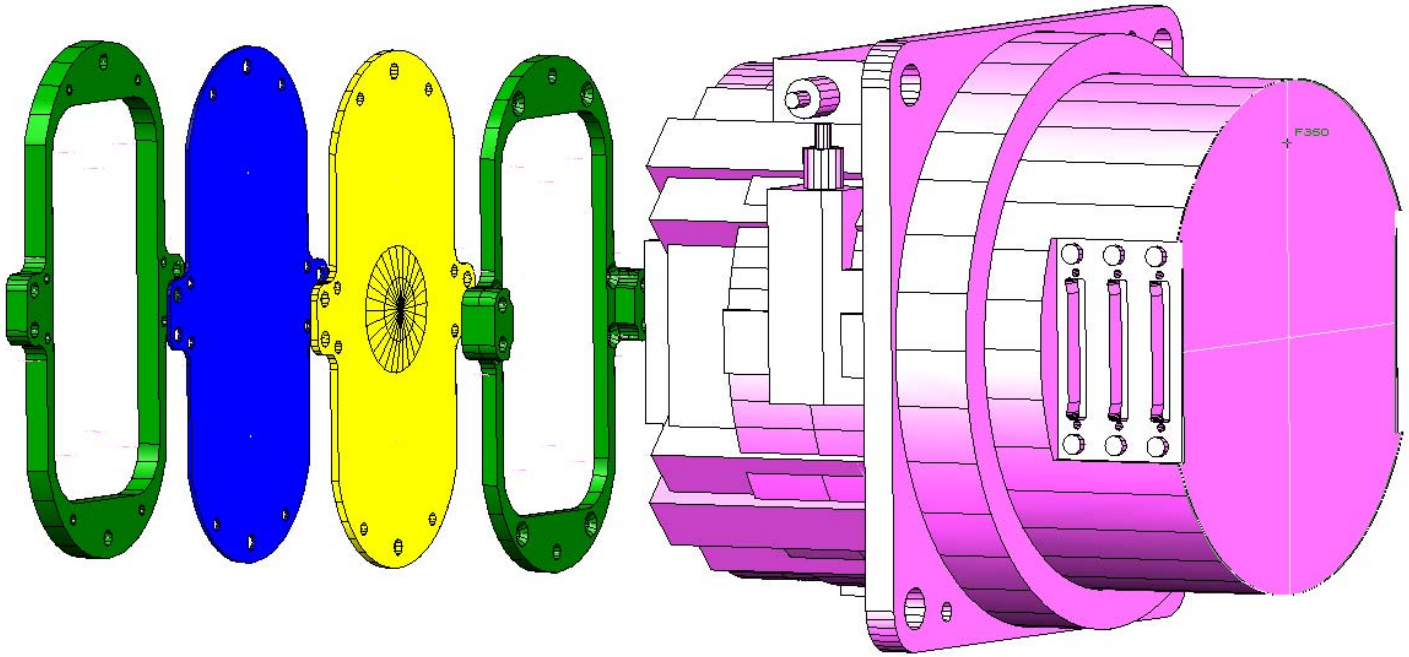

Figure 7 Location of spectrometer lens in 300-mK filter stack.

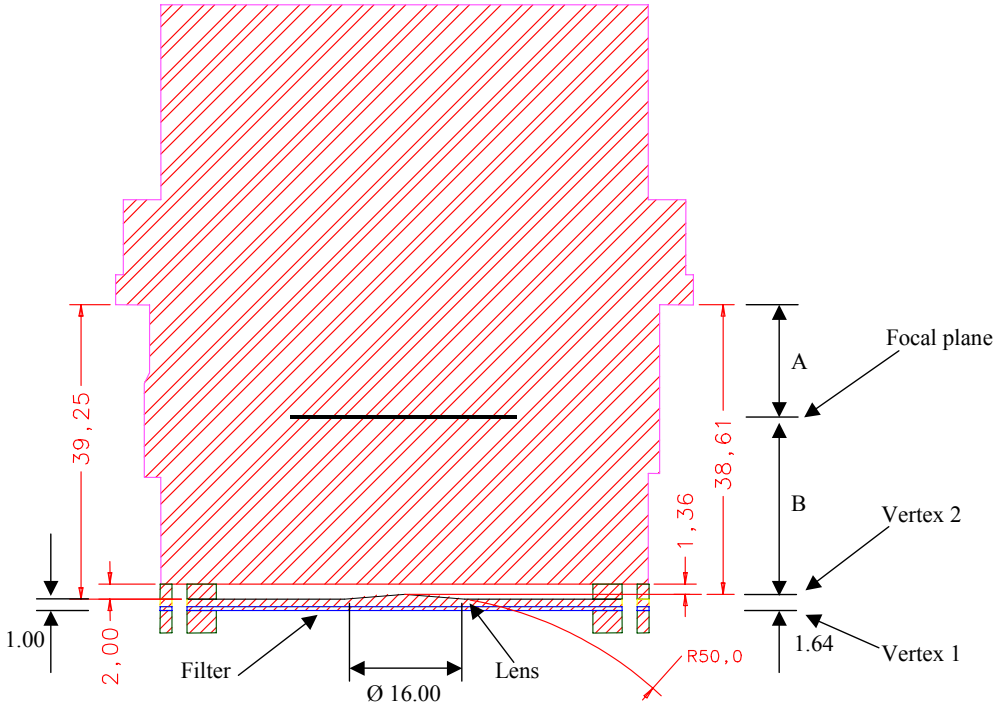

Figure 8 Dimensions of spectrometer lens – filter – detector assembly.

Table 1 Position of lens vertex and focal plane wrt detector mounting flange

	SLW	**SSW**
A (cf JPL ICD 9 Nov 2001)	36.9	26.7
B = 38.61 - A	1.71	11.91

SECTION 09 - As Built Configuration Items Status List

Item	Reference	Location	Notes
Filter drawings and manufacturing files		\\Darkstar\Astroworld\Projects\SPIRE\Cardiff_workpackages\Configured_documents\ Filters\Drawings\300MK-filter-CQM-PFM.doc	
Material certificates of conformance		Available at Cardiff for inspection	
FILT-PFM-210 Spectroscopic test data SLW-PFM assembly		\\Darkstar\Astroworld\Projects\SPIRE\Cardiff_workpackages\Configured_documents\ Issued\ Data\ FILT-PFM-210_filterstack_August2003.xls	
FILT-PFM-214 Spectroscopic test data SLW-PFM SFIL4L		\\Darkstar\Astroworld\Projects\SPIRE\Cardiff_workpackages\Configured_documents\ Issued\ Data\ B488_43cm-1_SFIL4L_PFM.xls	
FILT-PFM-215 Spectroscopic test data SLW-PFM SFIL5L		\\Darkstar\Astroworld\Projects\SPIRE\Cardiff_workpackages\Configured_documents\ Issued\ Data\ B476_33.3cm-1_SFIL5L_PFM.xls	
FILT-PFM-220 Spectroscopic test data SSW-PFM assembly		\\Darkstar\Astroworld\Projects\SPIRE\Cardiff_workpackages\Configured_documents\ Issued\ Data\FILT-PFM-220_SSW_assembly_October2003.xls	
FILT-PFM-223 Spectroscopic test data SLW-PFM lens material		\\Darkstar\Astroworld\Projects\SPIRE\Cardiff_workpackages\Configured_documents\ Issued\ Data\FILT-PFM-223_SSW_HDPE_October2003.xls	
FILT-PFM-224 Spectroscopic test data		\\Darkstar\Astroworld\Projects\SPIRE\Cardiff_workpackages\Configured_documents\ Issued\ Data\FILT-PFM-224_SSW_SFIL4S_October2003.xls	

SLW-PFM SFIL4S			
FILT-PFM-225 Spectroscopic test data SLW-PFM SFIL5S		\\Darkstar\Astroworld\Projects\SPIRE\Cardiff_workpackages\Configured_documents\ Issued\ Data\FILT-PFM-225_SSW_SFIL5S_October2003.xls	

Part number	Description	Details
FILT-PFM-220	***PFM SSW FILTER ASSEMBLY***	
FILT-PFM-221	SSW PFM lower filter ring	Aluminium-6082 – Aluchrom 1200 coated
FILT-PFM-222	SSW-PFM upper filter ring	Aluminium-6082 – Aluchrom 1200 coated
FILT-PFM-223	SSW PFM lens	HDPE lens
FILT-PFM-224	SFIL4S – PFM – B679 filter	60cm^{-1} LPE blocking filter
FILT-PFM-225	SFIL5S – PFM – B650 filter	52.6cm^{-1} LPE band defining edge filter
FILT-PFM-210	***PFM SLW FILTER ASSEMBLY***	
FILT-PFM-211	SLW PFM lower filter ring	Aluminium-6082 – Aluchrom 1200 coated
FILT-PFM-212	SLW-PFM upper filter ring	Aluminium-6082 – Aluchrom 1200 coated
FILT-PFM-213	SLW PFM lens	HDPE lens
FILT-PFM-214	SFIL4L – PFM – B488 filter	43cm^{-1} LPE blocking filter
FILT-PFM-215	SFIL5L – PFM – B476 filter	33.4cm^{-1} LPE band defining edge filter

SECTION 11 - List of Waivers

SECTION 12 - Copies of Waivers

SECTION 13 - Operations Manual

SECTION 14 - Historical Record

The following table contains *brief* historical details of the manufacture, assembly and testing of the PFM 300mK spectrometer filter set, including the levels of environmental cleanliness.
A *full* historical record of every stage of manufacture for each individual grid integral to the final mounted filter is traceable at UWC, in both hard copy log-book format and on a Microsoft Access database.

Filter SFIL4L

Date	Action	UWC Test reference
8/7/02	Filter B488 manufactured in class 1000 clean room	
11/7/02	Filter B488 spectroscopically tested in the range3-40cm-1	T0013ra
14/7/02	Filter B488 spectroscopically tested in the range 20-650cm-1	S2569ra
06/08/03	Filter B488 cut to SFIL4L drawing	Process HC1
06/08/03	Filter B488 spectroscopically tested in the range 0-145cm-1 at two locations over area	T0148r16, T0148R19
06/08/03	Filter B488 thermally shocked 5 times between 77K and 350K	
06/08/03	Filter B488 spectroscopically tested in the range 0-145cm-1 at two locations over area	T0148R31, T0148R34
06/08/03	Filter B488 cleaned & baked for 12 Hrs at 350K	
07/08/03	Filter B488 mounted in PFM-SLW stack	
07/08/03	PFM-SLW stack final clean, 12Hr bake-out	
08/08/03	PFM-SLW shipped to JPL	

Filter SFIL5L

Date	Action	UWC Test reference
6/6/02	Filter B476 manufactured in class 1000 clean room	
19/6/02	Filter B476 spectroscopically tested in the range20-650cm-1	S2583r4
26/6/02	Filter B476 spectroscopically tested in the range3-40cm-1	S2584r7
16/7/02	Filter B476 spectroscopically tested for uniformity in the range 4-40cm-1	T0015ra
06/08/03	Filter B476 cut to SFIL5L drawing	Process HC1
06/08/03	Filter B476 spectroscopically tested in the range 0-145cm-1 at two locations over area	T0148R25, T0148R28
06/08/03	Filter B476 thermally shocked 5 times between 77K and 350K	
06/08/03	Filter B476 spectroscopically tested in the range 0-145cm-1 at two locations over area	T0148R37, T0148R40
06/08/03	Filter B476 cleaned & baked for 12 Hrs at 350K	
07/08/03	Filter B476 mounted in PFM-SLW stack	

07/08/03	PFM-SLW stack final clean, 12Hr bake-out	
08/08/03	PFM-SLW shipped to JPL	

SLW-PFM Lens

Date	Action	UWC Test reference
13/08/02	HDPE material purchased from Goodfellow Cambridge LTD	Cat.# ET327980, order ref. LS241088/S K
16/10/02	Lens blanks embossed by Cardiff MEC centre, School of Engineering	Inspection report Q2217
06/08/03	Lens cut to size	Process HC1
06/08/03	SLW-PFM lens thermally shocked 5 times between 77K and 350K	
06/08/03	SLW-PFM lens cleaned & baked for 12 Hrs at 350K	
07/08/03	SLW-PFM lens mounted in PFM-SLW stack	
07/08/03	PFM-SLW stack final clean, 12Hr bake-out	
08/08/03	PFM-SLW shipped to JPL	

Filter SFIL4S

Date	Action	UWC Test reference
4/7/03	Filter B650 manufactured in class 1000 clean room	
8/7/03	Filter B650 spectroscopically tested in the range 10-145cm-1	S2676r7
9/7/03	Filter B650 spectroscopically tested in the range 3-40cm-1	T0118r7
24/7/03	Filter B650 thermally cycled 2 x [300K-77K-300K)	
9/9/03	Filter B650 repressed	
10/9/03	Filter B650 spectroscopically tested in the range 3-40cm-1	T0174r12
11/9/03	Filter B650 spectroscopically tested in the range 15-140cm-1	T0175r7
13/10/03	Filter B650 cut to SFIL4S drawing	Process MC1
14/10/03	SFIL4S spectroscopically tested for uniformity in the range10-145cm-1 – Three locations over area	T0199r13, T0199r28, T0199r31
14/10/03	SFIL4S mounted into 300mK SSW-PFM filter assembly	

Filter SFIL5S

Date	Action	UWC Test reference
8/8/03	Filter B679 manufactured in class 1000 clean room	
11/8/03	Filter B679 spectroscopically tested in the range10-145cm-1	T0150r7
11/8/03	Filter B679 thermally cycled 5 x [300K-77K-300K)	Therm0031
11/8/03	Filter B679 spectroscopically tested in the range 3-40cm-1	T0150r13
13/10/03	Filter B679 cut to SFIL5S drawing	
14/10/03	SFIL5S spectroscopically tested for uniformity in the range10-145cm-1	T0199r16, T0199r19, T0199r22
14/10/03	SFIL5S mounted into 300mK SSW-PFM filter assembly	

SSW PFM filter stack assembly

Date	Action	UWC Test reference
14/10/03	HDPE SSW lens material spectroscopically tested in the range10-145cm-1	T0199r4, T0200r13
14/10/03	Filters B650, B679 and lens mounted into SSW-PFM assembly.	
14/10/003	SSW-PFM filter stack measured on clean room CMM	
14/10/03	SSW-PFM filter stack thermally shocked 2 times between 77K and 350K while mounted on invar BDA replica	
14/10/003	SSW-PFM filter stack re-measured on clean room CMM	
15/10/03	SSW-PFM stack assembly spectroscopically tested for uniformity in the range10-145cm-1	T0200r4, T0200r7, T0200r13
15/10/03	Final cleaning, followed by 8Hr bakeout (350K)	
15/10/03	PFM-SSW assembly shipped to JPL	

SECTION 15 - Logbook / Diary of Events

Not provided – available from subsystem provider upon request.

SECTION 16 - Operating Time / Cycle Record

SECTION 20 - Calibration Data Record

The recommended total stack transmission for the SLW and SSW channels to be used for calibration purposes is indicated in this section.

Important notes on these data:-

- It was not possible to measure the transmission of the stack assemblies through the central area of the filter stacks, due to the presence of the lenses. The lenses would change the FTS beam and make background measurements impossible.

- For the SLW stack, the data shown in Figure 9 were calculated as follows:-
    - Measure the filter transmissions individually
    - Measure the HDPE lens material transmission through the 1.0mm thick planar areas
    - Combine these data to calculate the total transmission of the stack

- For the SSW stack, the data shown in Figure 10 were calculated as follows:-
    - Measure the filter transmissions individually
    - Measure the HDPE lens material transmission through the 1.0mm thick planar areas
    - Combine these data to calculate the total transmission of the stack (shown in red)
    - Measure the transmission of the stack, either side of the lens to verify the calculated transmission

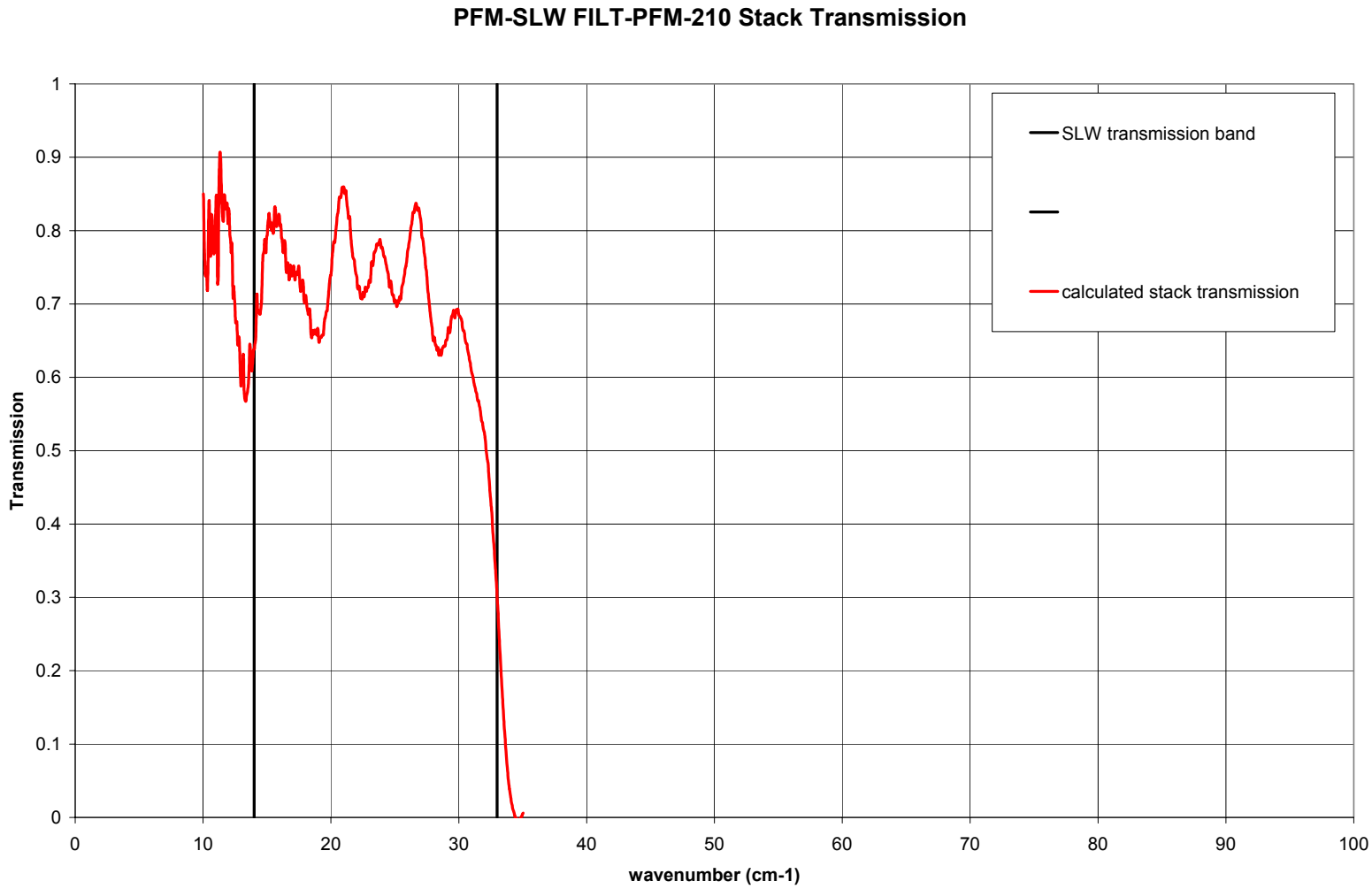

Figure 9 Spectroscopic data for PFM-SLW stack

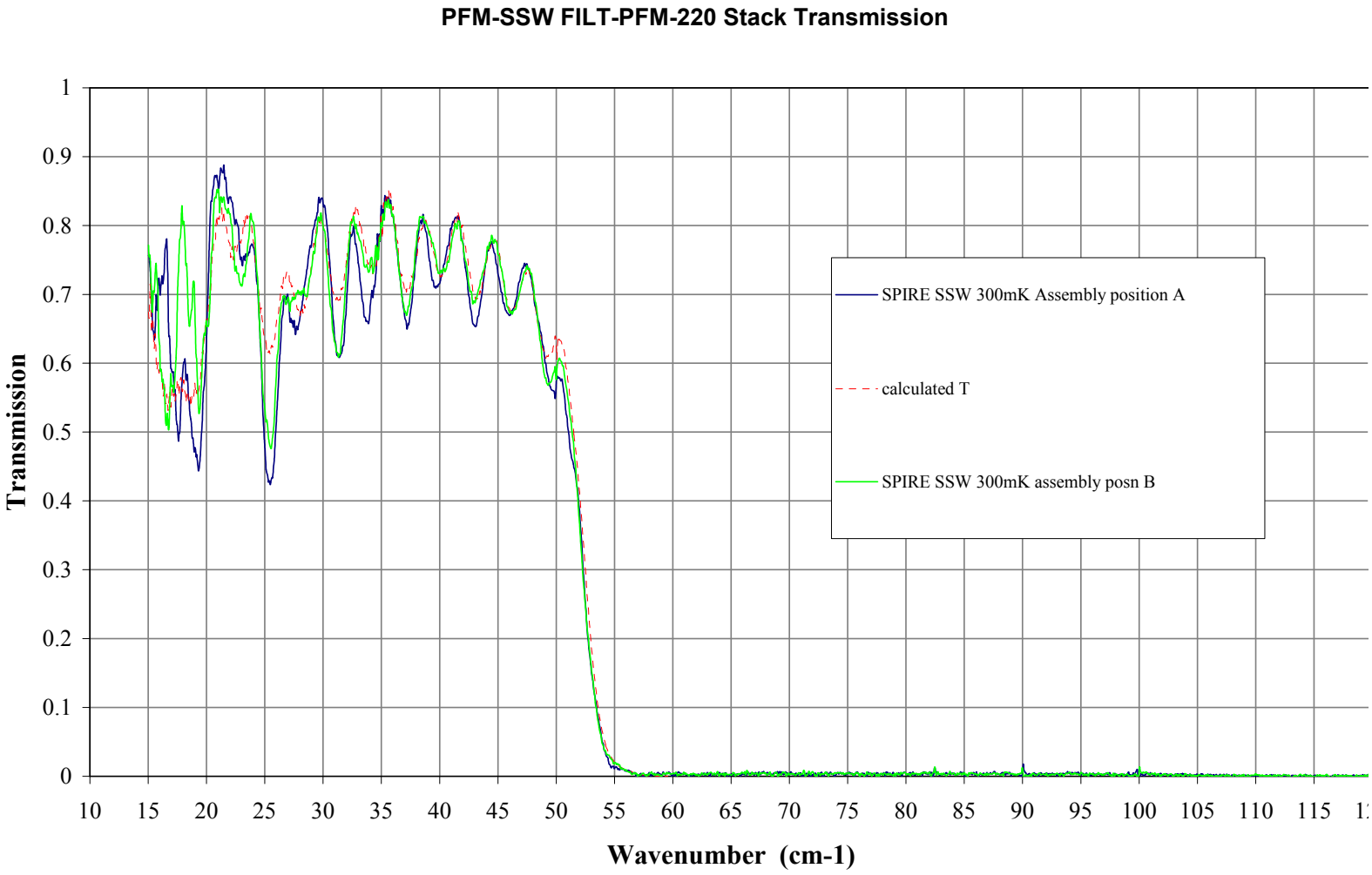

Figure 10 Spectroscopic data for PFM-SSW stack

SECTION 21 - Temporary Installation Record

e.g. in cryostats etc – refer to hist record – include fit checks

SECTION 22 - Open Work / Deferred Work / Open Tests

SECTION 23 - List of Non-Conformance Reports

SECTION 24 - Copies of Non-Conformance Reports

SECTION 25 - Test Reports

Each filter module (SLW and SSW assemblies) underwent the following series of qualification tests:-

a) Post-manufacture spectroscopic measurements
b) Thermal shocks of the filter material. This consists of between two and five cycles of:-
    - Plunge filter material at room temperature into bath of liquid nitrogen and leave for 2 minutes
    - Remove filter material from LN_2 and place in oven at 353K for 10 minutes
c) Visual inspection
d) Post-shock spectroscopic measurements
e) Cutting to size
f) Visual inspection
g) Spectroscopic measurements of filter material at three points over the filter area
h) Second thermal shock cycle – repeat of step (b)
i) Visual inspection under microscope
j) Spectroscopic measurements of filter material at three points over the filter area
k) Mounting filter material in clamp assembly
l) Spectroscopic measurements of mounted assembly
m) Thermal shocks of filter assembly – repeat step (b)
n) Final spectroscopic measurements of filter assembly – 3 points over filter area

Spectroscopic tests – index

Spectroscopic tests were carried out according to standard UWC FTS procedures. Refer to historical record for index.

Spectroscopic test details

- Uniformity checks:-
    - Filter components were checked for uniformity at three points along the filters long axis - at the centre of the filter, and at two points along the long axis, 16mm either side of the central point.
    - The FTS geometric beam footprint was approximately 7mm diameter.
    - The SSW stack transmission was measured at the two 16mm off-set points, but not through the centre point, for reasons discussed earlier (section 20)

PFM-SFIL4L

Figure 11 B488 SFIL4L FILT-PFM-214 pre-thermal shocking

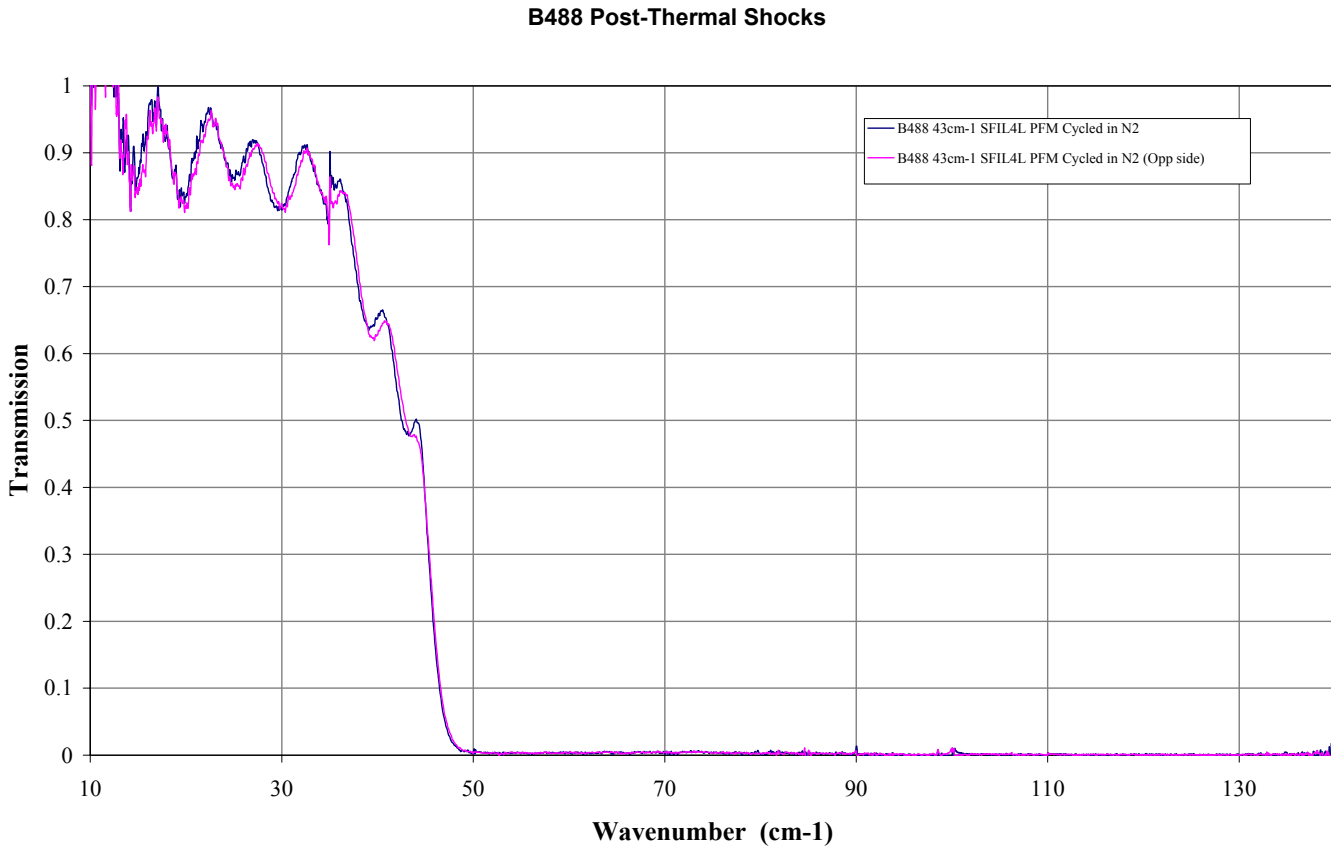

Figure 12 B488 SFIL4L FILT-PFM-214 post-thermal shocking

PFM-SFIL5L

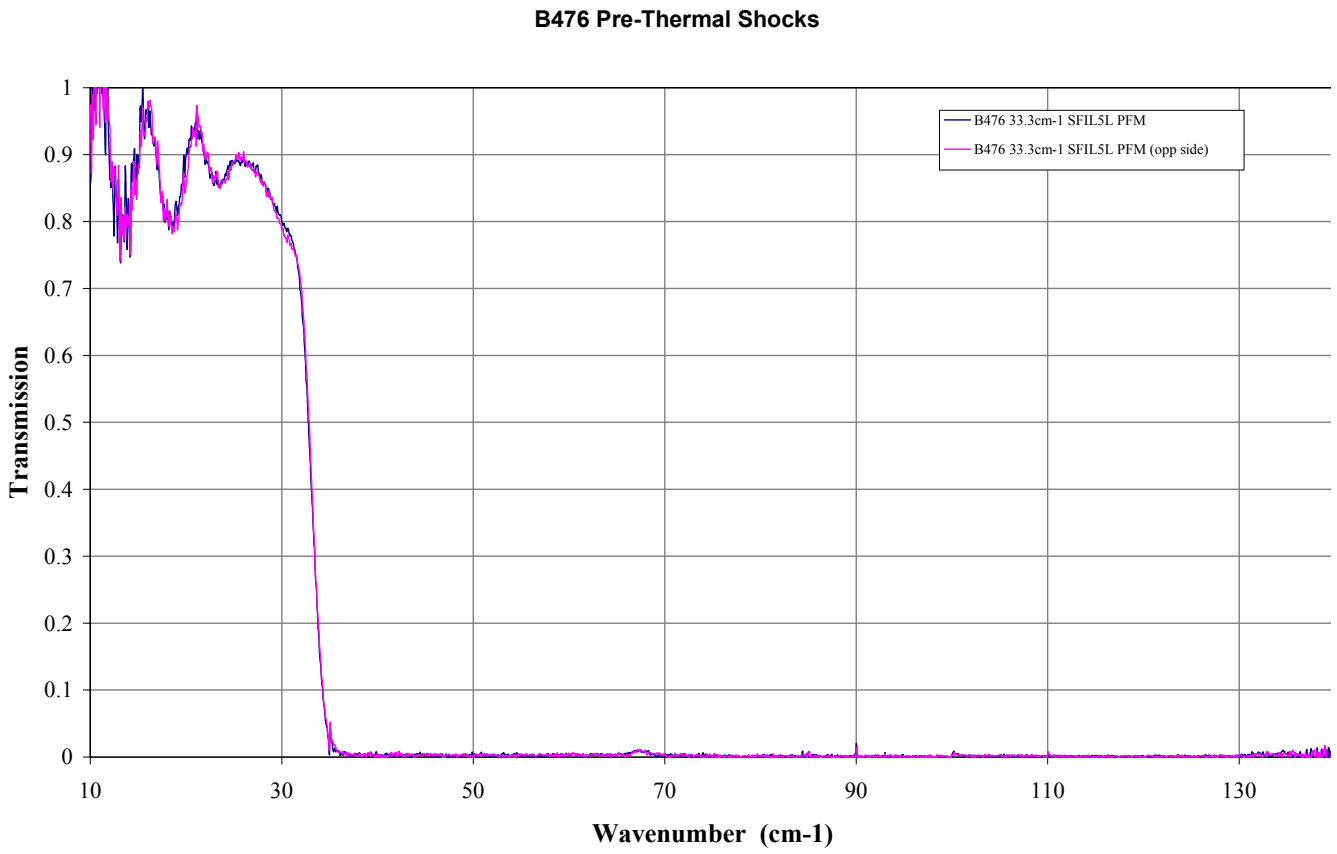

Figure 13 B476 SFIL5L FILT-PFM-215 pre-thermal shocking

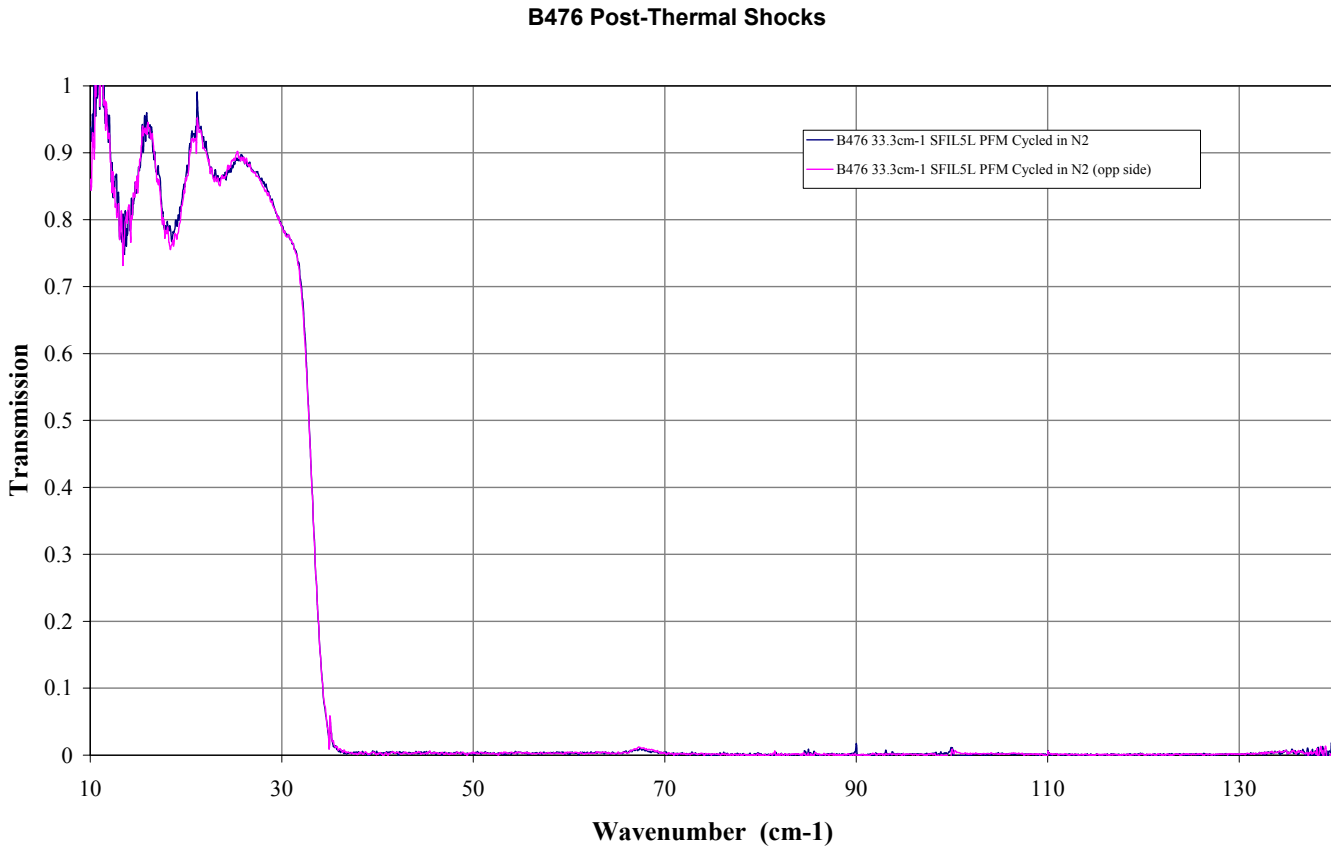

Figure 14 B476 SFIL5L FILT-PFM-215 post-thermal shocking

PFM-SLW Lens

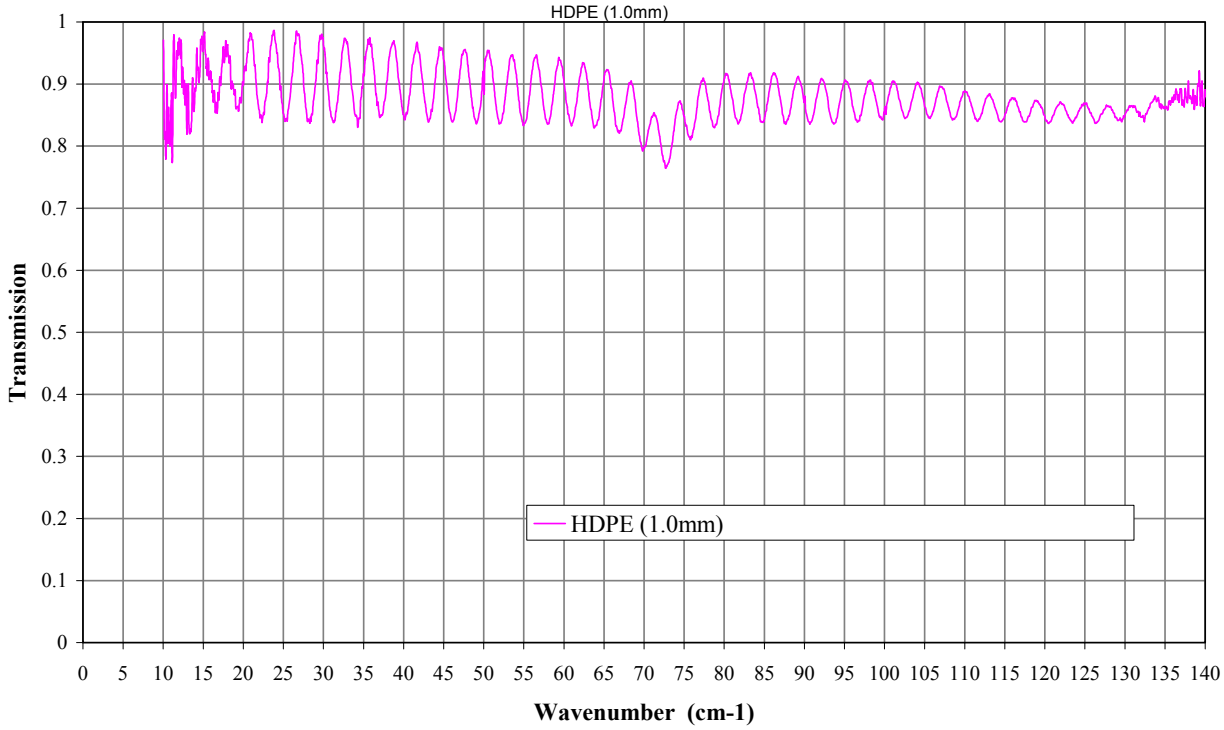

Figure 15 Transmission of 1.0mm thick planar section of PFM-SLW lens

PFM-SFIL4S

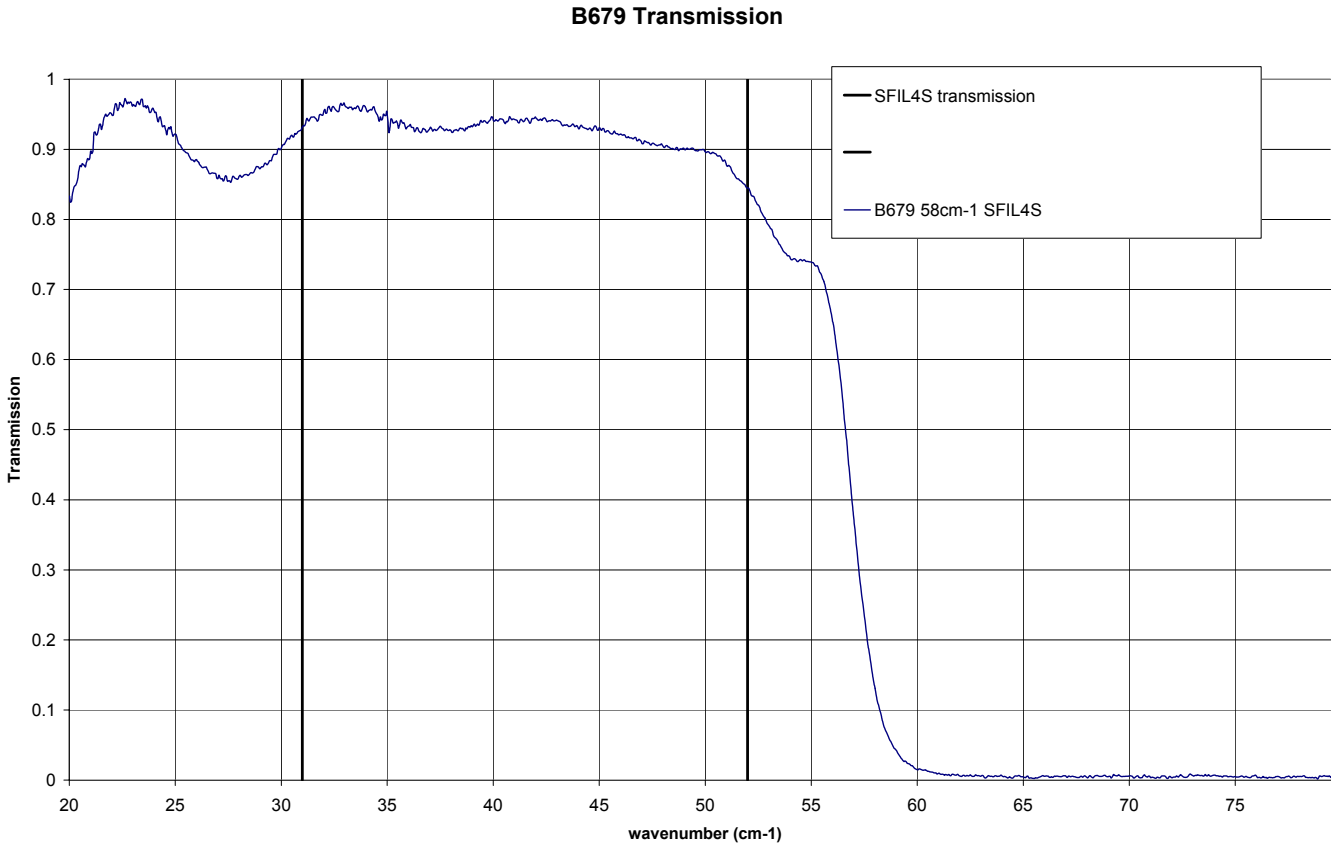

Figure 16 B679 SFIL4S FILT-PFM-224 pre-thermal shocking

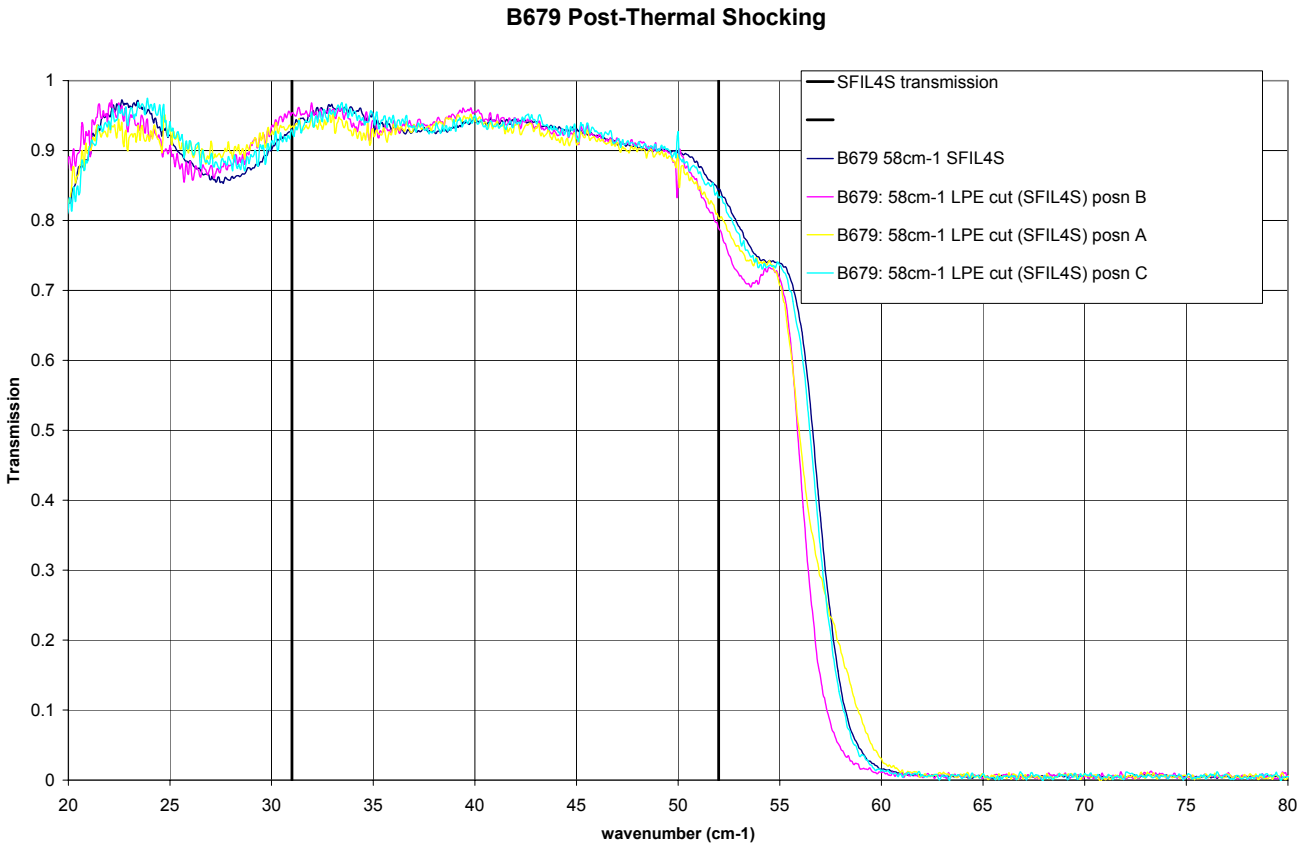

Figure 17 B679 SFIL4S FILT-PFM-224 post-thermal shocking, and uniformity data

PFM-SFIL5S

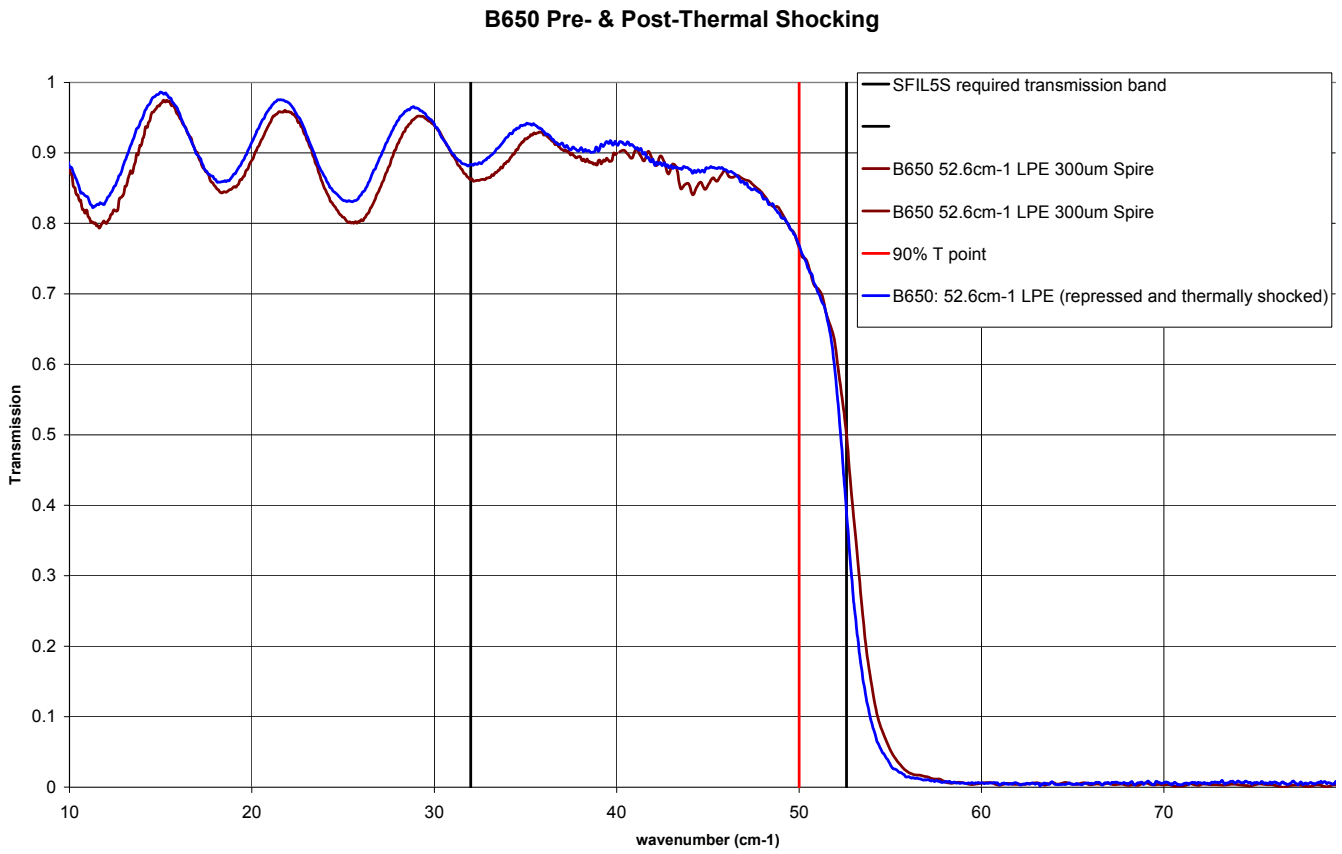

Figure 18 B650 SFIL5S FILT-PFM-225 pre- and post-thermal shocking data

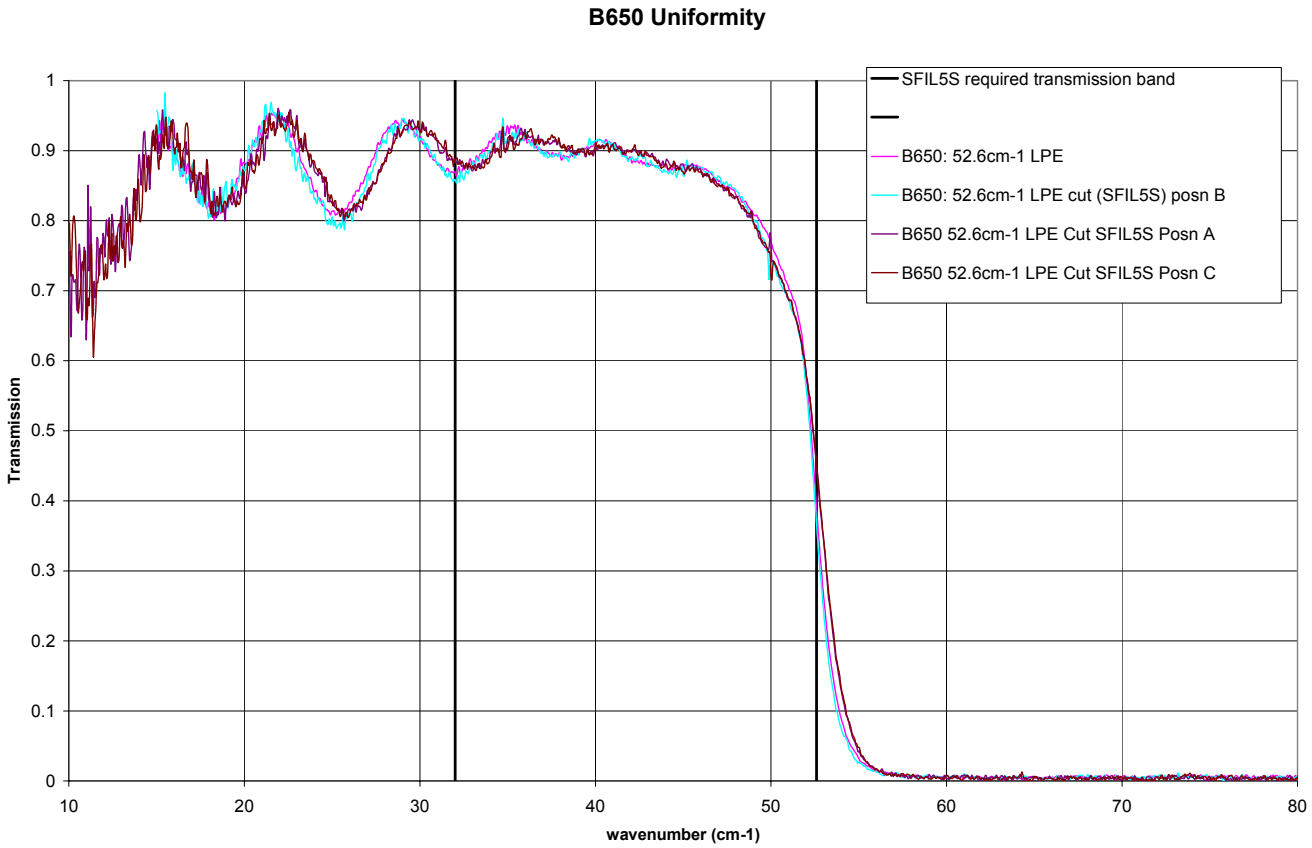

Figure 19 B650 SFIL5S FILT-PFM-225 uniformity data

PFM-SSW Lens

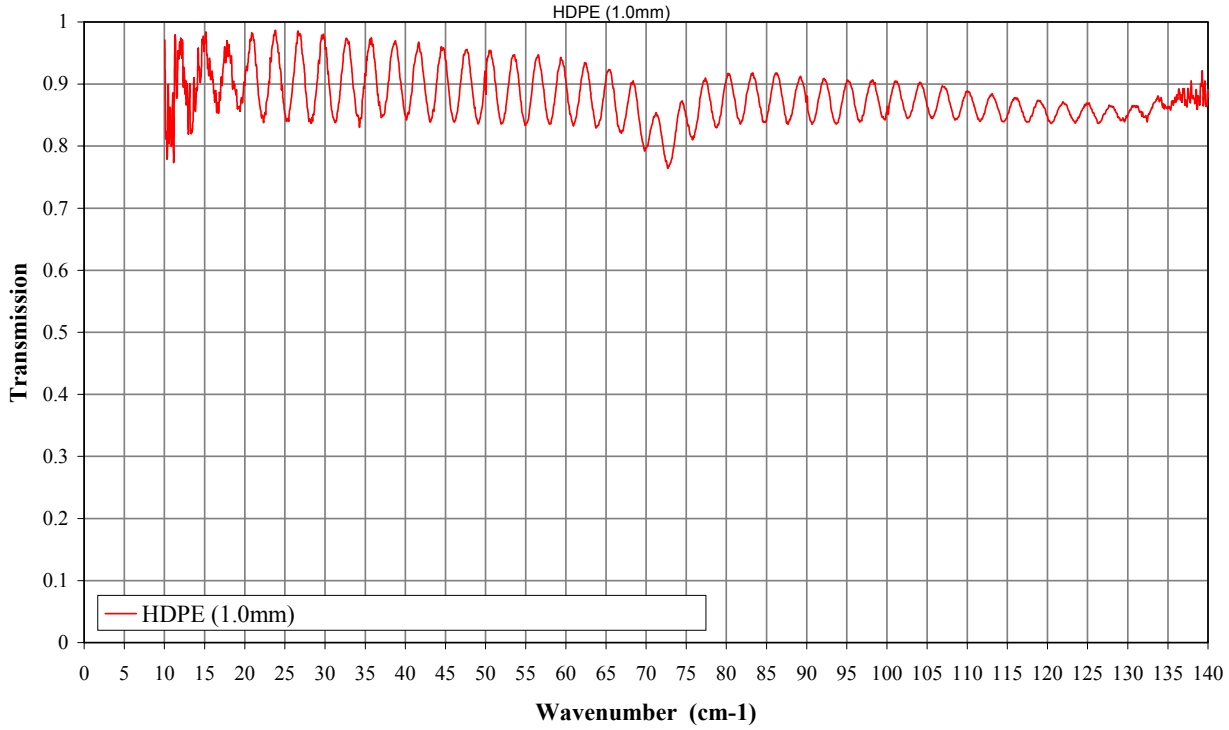

Figure 20 Transmission of 1.0mm thick planar section of PFM-SSW lens

PFM-SSW Filter Stack Assembly

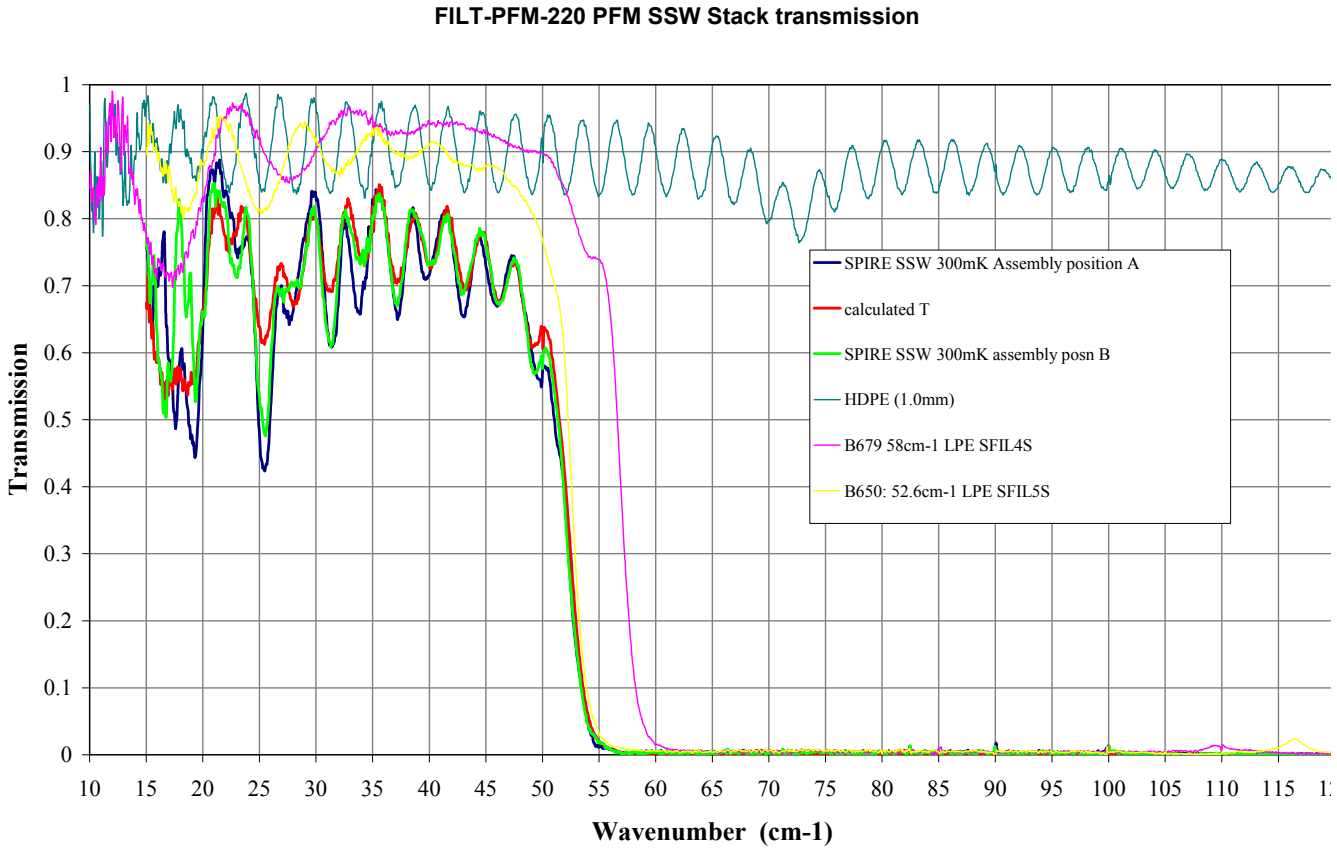

Figure 21 Transmission of assembled SSW filter stack, including lens. Trace in red shows transmission calculated from individual component spectra, green and dark-blue are the actual measured data.

PFM-SSW Metrology Report

To follow

SECTION 27 - Reference List of EIDP's

Associated

Title (Listed in alphabetical order)	ID (Serial No.)	Acronym	Document No.	Issue	Date
PLW BDA CQM EIDP					

Lower Level

Title (Listed in alphabetical order)	ID (Serial No.)	Acronym	Document No.	Issue	Date

SECTION 28 - Mass Records

Assembly	Final measured mass
FILT-PFM-210 – PFM SLW assembly	11.310 ± 0.002 g
FILT-PFM-220 – PFM SSW assembly	11.000 ± 0.002 g

SECTION 29 - Cleanliness Statement

SECTION 30 - Other Useful Information

SECTION 31 - DPL/DML etc

SECTION 32 – List of Appendices/Attachments

Appendix #	Title (Listed in alphabetical order)	Document No.	Issue	Date	Notes