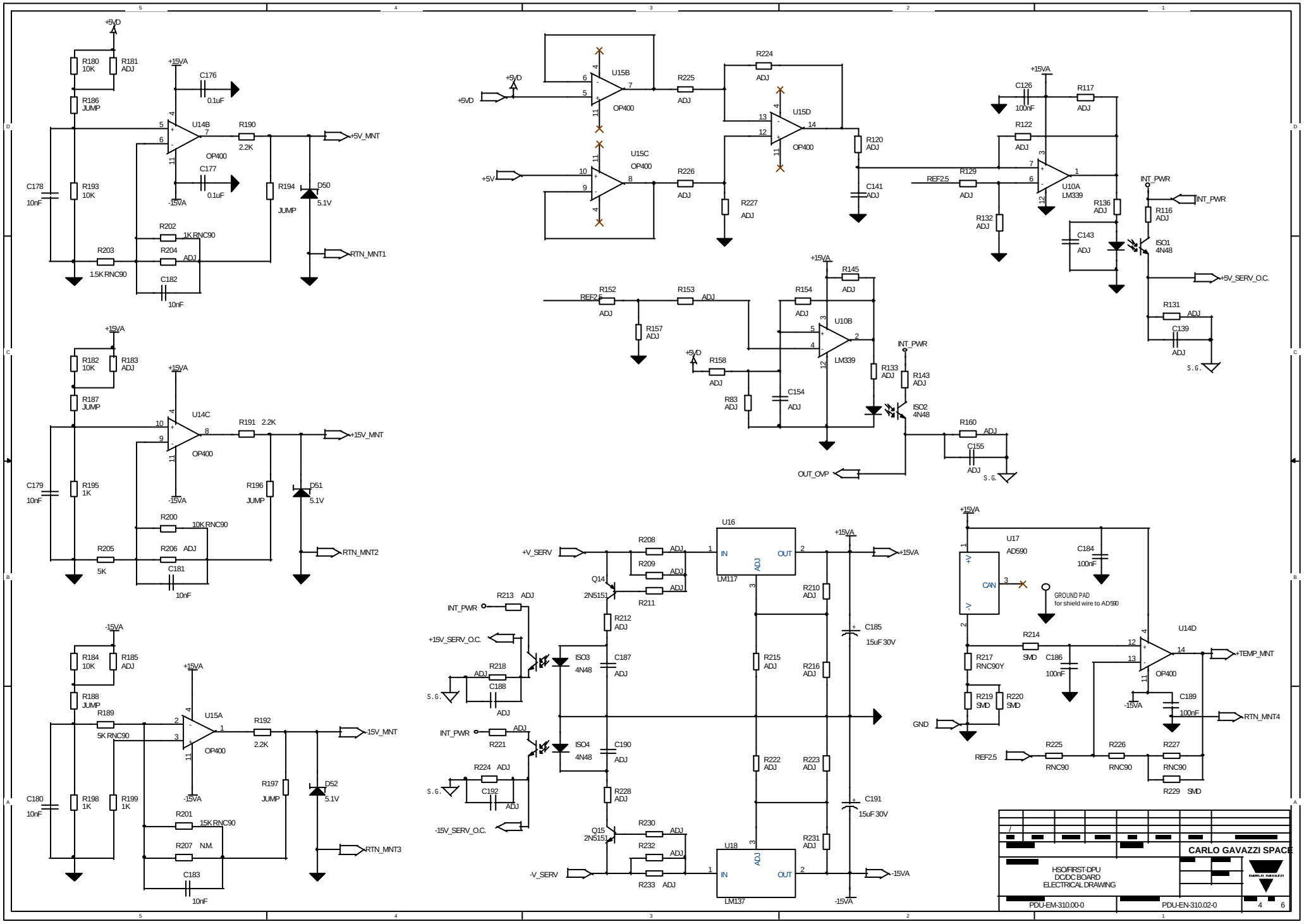
+5VD
R180 10K
R181 ADJ
R186 JUMP
+15VA
C176 0.1uF
U14B
OP400
R190 2.2K
+5V_MNT
C177 0.1uF
-15VA
C178 10nF
R193 10K
R194 JUMP
D50 5.1V
R202 1K RNC90
R203 1.5K RNC90
R204 ADJ
C182 10nF
RTN_MNT1
R182 10K
R183 ADJ
R187 JUMP
U14C
R191 2.2K
+15V_MNT
C179 10nF
R195 1K
R196 JUMP
D51 5.1V
R200 10K RNC90
R205 5K
R206 ADJ
C181 10nF
RTN_MNT2
R184 10K
R185 ADJ
R188 JUMP
R189 5K RNC90
U15A
R192 2.2K
-15V_MNT
C180 10nF
R198 1K
R199 1K
R197 JUMP
D52 5.1V
R201 15K RNC90
R207 N.M.
C183 10nF
RTN_MNT3
U15B
OP400
R225 ADJ
R224 ADJ
U15D
R120 ADJ
U15C
R226 ADJ
R227 ADJ
C141 ADJ
C126 100nF
R117 ADJ
R122 ADJ
REF2.5
R129 ADJ
U10A LM339
R132 ADJ
R136 ADJ
INT_PWR
R116 ADJ
C143 ADJ
ISO1 4N48
+5V_SERV_O.C.
R131 ADJ
C139 ADJ
S.G.
R152 ADJ
R153 ADJ
R154 ADJ
R145 ADJ
R157 ADJ
U10B LM339
R158 ADJ
R133 ADJ
R143 ADJ
R83 ADJ
C154 ADJ
ISO2 4N48
R160 ADJ
C155 ADJ
OUT_OVP
U16 LM117
IN
OUT
ADJ
+V_SERV
R208 ADJ
R209 ADJ
R211 ADJ
Q14 2N5151
R213 ADJ
R212 ADJ
ISO3 4N48
C187 ADJ
R218 ADJ
C188 ADJ
R210 ADJ
R215 ADJ
R216 ADJ
C185 15uF 30V
R221 ADJ
ISO4 4N48
C190 ADJ
R224 ADJ
C192 ADJ
R222 ADJ
R223 ADJ
R228 ADJ
C191 15uF 30V
Q15 2N5151
R230 ADJ
R232 ADJ
R233 ADJ
-V_SERV
U18 LM137
R231 ADJ
-15V_SERV_O.C.
U17 AD590
C184 100nF
CAN
GROUND PAD
for shield wire to AD590
R214 SMD
C186 100nF
R217 RNC90Y
R219 SMD
R220 SMD
GND
U14D
OP400
+TEMP_MNT
C189 100nF
RTN_MNT4
R225 RNC90
R226 RNC90
R227 RNC90
R229 SMD
CARLO GAVAZZI SPACE
HSO/FIRST-DPU
DC/DC BOARD
ELECTRICAL DRAWING
PDU-EM-310.00-0
PDU-EN-310.02-0
4 6