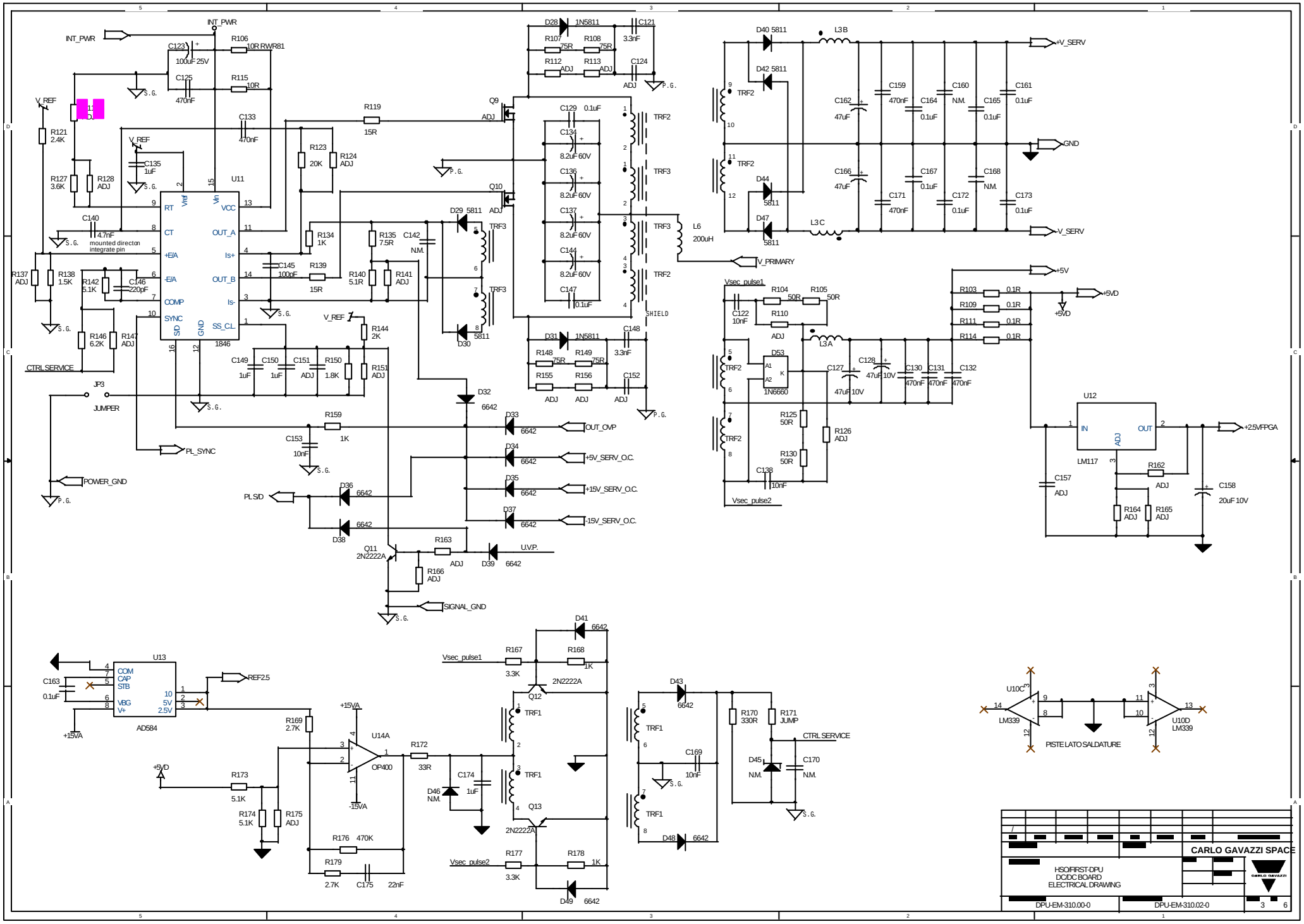
INT_PWR
C123 100uF 25V
R106 10R RWR81
C125 470nF
R115 10R
C133 470nF
V_REF
R121 2.4K
R127 3.6K
R128 ADJ
C135 1uF
U11
1846
RT
CT
+E/A
-E/A
COMP
SYNC
SD
GND
Vref
Vin
VCC
OUT_A
Is+
OUT_B
Is-
SS_CL
C140 4.7nF
mounted directon integrate pin
R137 ADJ
R138 1.5K
R142 5.1K
C146 220pF
R146 6.2K
R147 ADJ
CTRL SERVICE
JP3
JUMPER
POWER_GND
PL_SYNC
PLSD
R119 15R
R123 20K
R124 ADJ
R134 1K
R135 7.5R
C142 N.M.
C145 100pF
R139 15R
R140 5.1R
R141 ADJ
R144 2K
C149 1uF
C150 1uF
C151 ADJ
R150 1.8K
R151 ADJ
R159 1K
C153 10nF
D32 6642
D33 6642
D34 6642
D35 6642
D36 6642
D37 6642
D38 6642
D39 6642
OUT_OVP
+5V_SERV_O.C.
+15V_SERV_O.C.
-15V_SERV_O.C.
U.V.P.
Q11 2N2222A
R163 ADJ
R166 ADJ
SIGNAL_GND
Q9 ADJ
Q10 ADJ
D28 1N5811
R107 75R
R108 75R
R112 ADJ
R113 ADJ
C121 3.3nF
C124 ADJ
C129 0.1uF
C134 8.2uF 60V
C136 8.2uF 60V
C137 8.2uF 60V
C144 8.2uF 60V
C147 0.1uF
TRF2
TRF3
L6 200uH
SHIELD
V_PRIMARY
D31 1N5811
R148 75R
R149 75R
R155 ADJ
R156 ADJ
C148 3.3nF
C152 ADJ
D40 5811
D42 5811
D44 5811
D47 5811
L3B
L3C
C162 47uF
C166 47uF
C159 470nF
C164 0.1uF
C160 N.M.
C165 0.1uF
C161 0.1uF
C171 470nF
C167 0.1uF
C172 0.1uF
C168 N.M.
C173 0.1uF
+V_SERV
GND
-V_SERV
Vsec_pulse1
Vsec_pulse2
R104 50R
R105 50R
C122 10nF
R110 ADJ
L3A
D53 1N6660
C127 47uF 10V
C128 47uF 10V
C130 470nF
C131 470nF
C132 470nF
R125 50R
R126 ADJ
R130 50R
C138 10nF
R103 0.1R
R109 0.1R
R111 0.1R
R114 0.1R
+5V
+5VD
U12
LM117
IN
OUT
ADJ
+25VFPGA
C157 ADJ
R162 ADJ
R164 ADJ
R165 ADJ
C158 20uF 10V
U13
AD584
COM
CAP
STB
VBG
V+
5V
2.5V
C163 0.1uF
+15VA
REF25
R169 2.7K
U14A
OP400
R172 33R
R173 5.1K
R174 5.1K
R175 ADJ
R176 470K
R179 2.7K
C175 22nF
-15VA
C174 1uF
D46 N.M.
Q12 2N2222A
Q13 2N2222A
TRF1
R167 3.3K
R168 1K
D41 6642
R177 3.3K
R178 1K
D49 6642
D43 6642
C169 10nF
D48 6642
R170 330R
R171 JUMP
D45 N.M.
C170 N.M.
U10C LM339
U10D LM339
PISTE LATO SALDATURE
CARLO GAVAZZI SPACE
HSO/FIRST-DPU
DC/DC BOARD
ELECTRICAL DRAWING
DPU-EM-310.00-0
DPU-EM-310.02-0
3 6