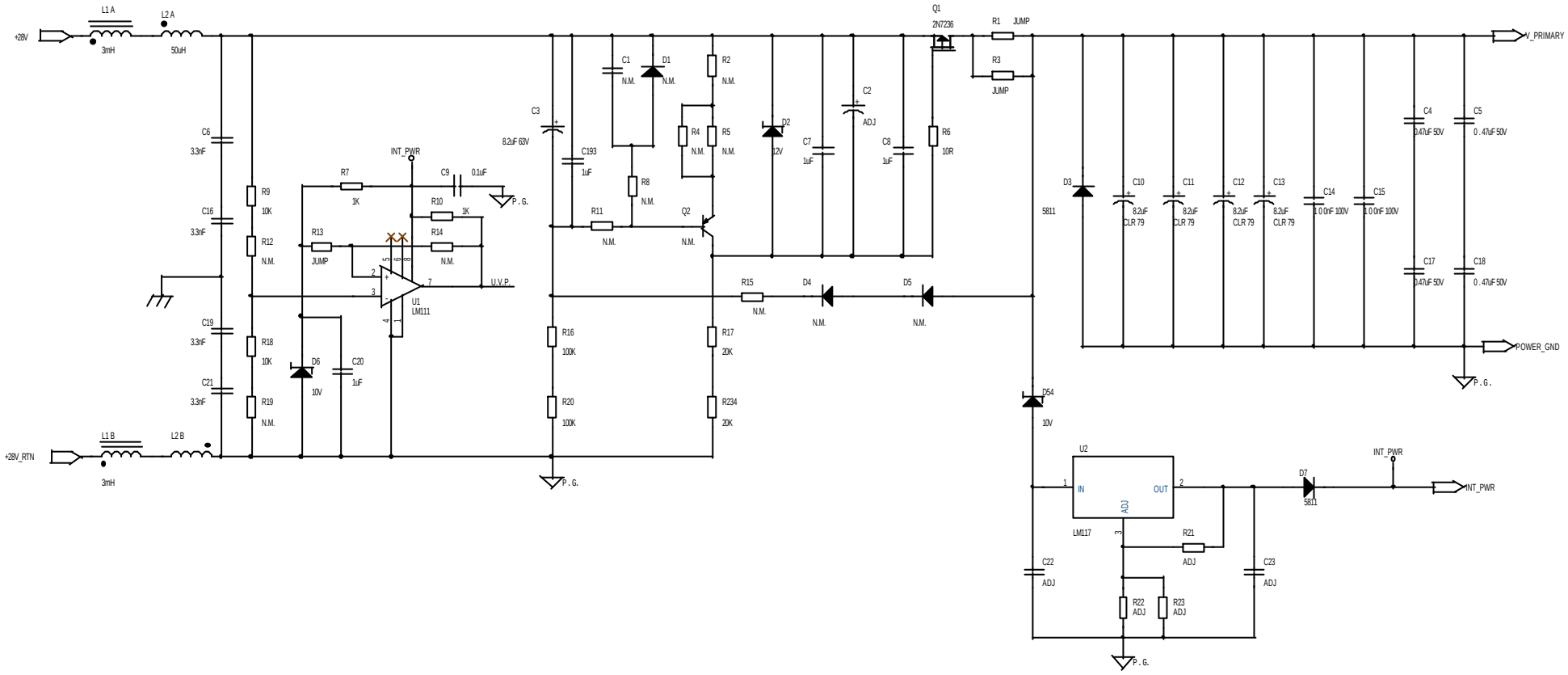

CARLO GAVAZZI SPACE

H S O / FIRST-DPU
D C / DC BOARD
E L E C T R I C A L DRAWING

P D U - E M-310.00-0 | P D U - E M -310.02-0 | 2 6