Subject: **HERSCHEL SPIRE HARNESS DEFINITION**

- This issue is consistent with the SPIRE Block Diagram Issue 4.5 - Issued 26th June 2002
- Harness shielding on the C-Harnesses is baselined in this document

PREPARED BY: D.K. GRIFFIN 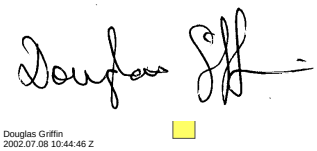 **Date:** ……

Douglas Griffin
2002.07.08 10:44:46 Z

APPROVED BY: J. DELDERFIELD…… 2002.07.08 11:02:19 +01'00'

APPROVED BY: K. KING…….. **Date:** …….

CHANGE RECORD

ISSUE	DATE	SECTION	CHANGE(S) MADE
Draft 0.1	28/3/01	All	First Issue
Draft 0.2	11/4/01	All	Still getting it together! No unified style for lists yet.
Draft 0.3	10/5/01	Section 3	Update diagrams to fit latest SPIRE block diagram
		W1-6	Clarify screens as per communication 26/4/01, leaving other pins unchanged.
		C&I 1&3	Update Type 2 and Type 3 harnesses to fit 1:1 to membranes' back harness contacts, using 25pin filters.
		C Type1s	Simplify by carrying signal ground on screens.
		I1	Remove nasty 3 row double density 44 way connectors
		All Cs	Put in JFET and FET filter designations
		I1 Type3	Nasty 44 pin 3row DCU connectors removed.
		C10-C13	Add tail wiring details. omitting FCU pin details until unit layout confirmed. Changed HSFCU J21 and J22 to 15 way because don't need more pins.
Draft 0.4	10/8/01	Section 3	Update diagrams to fit SPIRE block diagram iss. 2.5. This uses 37way not 25way BDA service filter modules.
		BP & BS	Include JFET unit Back-Harnesses as separate section, in order to control all major Spire harnesses herein. Move overview of them from section 3 into this new one.
		I11&I13	Change HSFCU J21 and J22 back to 25way because do actually need more pins…stimulator heater omitted in iss0.3!
		F1-15	Make clear has plug/socket at HSFPU wall [A & B]
		C1-13	Ensure harness outer shields inside the cryostat include a break and do not unchangeably join the 100Way CVV connector bodies to the HSFPU/HSJFP/HSJFS backshells. Linking them is a left-over from when these units and the 300mK plumbing were all fixed grounded to the cryostat. Shields inside the cryostat now come through 100way pins, reducing their availability for use as signal grounds. The harness is now compatible with the Spire grounding scheme in which either the cryogenic or the warm end of the bolometer analogue system can be joined to chassis ground.
		Acronym	List inserted.
		Wiring list	Append as Annex. This will be included in the IID-B but IS NOT a sufficient specification for the C/I harnesses
		C1 and C3	In draft 0.2 fixed on 12ax for C harnesses inside cryostat where practical to minimise heatleak with screened twisted pairs used on I harnesses outside where RF fields may be larger. Switch to screened twisted pairs on bias lines in C1 and C3 to improve screening at JPL's request, but taking this as OK because they are only small proportion of the overall wires.
		C1 and C3	JFET membrane heater wires sized same as combined JFET voltage supply wires because power needs to be the same and heaters will now be sized to make their voltages similar
Draft 0.4 contd.	10/8/01	C1-2 & C4-9	Show 12ax third wires as joined to ground pin at 25way MDMs and not just at the 100way CVV connectors, to reduce ground noise.
		C1 and I1	Remove 300mK Thermal Control Thermistor a.c. Biasing from Spectrometer side harness.
		I11 & I13	BSM temp. removed from BSM tail listing as is already in temperature sensors' tail
		T Harnesses	Update Harness drawing etc. to remove "sync": from S/C to HSDRCU and to split EGSE units.
		C/I 10 &12	Remove JFET box thermistors included in error. Affects DCU J23 and J24 + FCU J23 and J24. Permits cleaner shield to 100way pin allocations.
		C/I 10 &12	Change to updated Spectrometer Calibrator Wiring.
		C3	Alter multiple heater wires to be in same proportions as multiplicity of JFET modules they heat, rather than the reverse! This arrangement is a bit of a left-over

ISSUE	DATE	SECTION	CHANGE(S) MADE
			from using 12-ax for this harness, and may disappear in the next issue.
0.5	22/8/01	Appendix	Include Channel # cross-reference listing.
		C4	Remove notes on tail connector PCB tracking.
		F1-15	Include pinouts
		C/I 11&13	Adjust launch latch wires as requested.
0.6	15/09/01	C/I 11&13	Update based on SMEC lists “010906.doc”
		Section 3	Update harness layout with new SMEC FCU connectors
		At end	Append grounding diagram as agreed.
		Annex	Put SMEC updates into wiring list.
		C1/3+Annex	Sort out sexes of RF filters so all the same as C11/13
		C/I 11&13	Make BSM latch drive wire resistance same as SMEC’s
0.7	19/09/01	All	Get HOB and SOB sorted
			Change Spectrometer Stim temperature to be Flange, not “near SOB”
0.8	02/11/01	4.3.4	Spelling error corrected
		N.A.	Added paragraph numbering to Annexes.
		All	References to the 100-way CVV conectors changed to 128-way
		All	References to “CVV Harness shield link” changed to “FPU Faraday Shield link”
		4.2.4	Colours updated on Type 1 DCU tails harness layup
		4.2.4	Type-1 128-way pin allocations assigned
		I and C	The pin allocations to the 128-way CVV connectors were added.
		I10	J11 and 12 tails amended to incorporate J13 and J14
		I10	Thermal control heater moved from J23 and J24 to J11 and J12
		I11	Split 25way tail to J21 to 15way J21 and 9-way J13.
		I13	Split 25way tail to J22 to 15way J22 and 9-way J14.
		Section 4.5.1	Simplify backharness to remove cross-linking and route temperature control via spare HSJFS membrane.
		BS and BP	Work through changes implied by section 4.5.1.
		C1 & C4	Work through changes implied by section 4.5.1.
		Section 3	Update harness layouts to match issue 0.8 changes.
		F28	Insert section for new harness
		I1 and I3	Insert a note, explaining configuration.
		All	Added backshell numbers.
		T7 and T8	Inserted J27 and J28 pinouts
		T1 and T2	Correct connector content as Sync is long gone.
		C2	Added extra tail for the 300-mK Thermometer signals
		Annex	Added information about the configuration of the CVV backshells
		4.2.10 - I10	Added 128-Way pin assignments to Shutter Table
		4.2.10 – I10	Assigned 128-way pins
		4.3.10 – C10	Added 128-Way pin assignments to Shutter Table
		4.3.10 – C10	Assigned 128-way pins
		4.2.10-I10	Added FPU Faraday Shield Link to harness in J23
		4.2.10-I10	Removed commoning of shields in thermometry tails at 128-way
		4.2.11-I11	Phot Stim. Heater changed to STQ as per C11 and J13 Pin allocation changed
		4.2.11/4.3.11	Chop Motor Pin allocation corrected to be Jiggle Motor
		4.2.2/4.3.2	Changed allocations of pins to accommodate a FPU Shield Link on the I2 harnesses.
		4.2.3	Added extra PMW heater so that each JFET module has a A/B heater lines. Updated pin allocation accordingly.
		Scope	Added note regarding EMI Backshells
		4.2.3-I3	Removed discussion notes
		4.6.1	Discussion updated

ISSUE	DATE	SECTION	CHANGE(S) MADE
0.8 Rev A	12/12/01	Annexes 1 & 2	Wiring lists brought into line with issue 0.8.
0.9	1/1/02	Cover	Update summary notes (JD)
		Section 3	Bring figures into line with SPIRE Block Diagram 3.8 (JD)
		W3-6	Swop J1-4 to agree with HSFCU numbering (JD)
		I10-13	Update warm end tail connector splitout to HSFCU design (JD)
		I11 & 13	Fix duplicate use of pin 31 on J17 and J18! (JD)
		I10	Update FCU J23-26 to Christophe's pinout. (JD)
		J37	Put in J37 pinout, removing wires from other I11 tails (JD)
	4/2/02	I1	
		Acronym list	Updated
		Notes	Clarify wording
		I1-I13	Corrected statement on the figures illustrating the D-Sub pin allocations indicating that overshield was not connected to an EMC backshell connector at wall of the CVV.
		I1	Updated Figure to show the ground reference for the FJET heaters to pass through the CVV connector
		I1	Updated figure to indicate commoning of ground references within connectors in the harness.
		I1	Connector names corrected on 128-way pin allocation figure
		I1-I13	Pin allocation tables corrected and notes added.
		I1	Spectrometer Heater ground reference wire deleted from pin allocation table.
		I1	Order of the pin allocation table adjusted to correspond to the order shown in the tail drawings
		I3	Reallocated pins for two 78-way connectors on DCU. (Previously four 37-way)
		W1-W6	Bring into line with DRCU ICD
			Added SPIRE Block diagram as a Reference Document
			Incorporated the connector panel into the cryoharness. This split the "I-Harness" section of the cryoharness into the "E-Harness" running from the wall of the CVV to the SVM connector panel and the "I-Harness" running from the SVM connector panel to the DRCU.
		C2/I2/I4	Incorporated provision for reading out the 300-mK thermal control hardware.
		2.1	The SPIRE Block Diagram called up as a reference document
		W1-W6	Discrepancies between this document and the DRCU and DPU ICDs reconciled. (regarding the harnesses carrying the LSLs and FSDLs)
		Annex 6	SPIRE Instrument Grounding Diagram amended
		Annex 7	Wiring diagram for readout of the 300-mK TC added
		W7/W8	Added pin allocations as per DRCU ICD 1.1
		All	Revised and updated part numbers for Backshells (see notes 7 and 8 in §3-Introduction
		I1	Corrected labelling of tails on 128-Way
		I1	Moved ground pins of the two bolometer tails on the 128-Way so they are close to each other to facilitate their interconnection
		I4	Connected all ground pins together as indicated.
		I4	Reallocated pins to connector to reflect the incorporation of the 300-mK TC. There are three less signal pairs passing through the 128-Way here.
		I10/12	Updated tail listing to reflect the incorporation of the 50-way connector for Thermometry Tail A (J23)
		I10/I12	Updated to reflect the incorporation of the skin connector for routing of the Shutter EGSE
		I10/I12	Updated SMEC I/F to conform to DRCU ICD
		I11	Rearranged pin assignments on the 128-way to allow for the addition of a dedicated launch lock confirmation tail

ISSUE	DATE	SECTION	CHANGE(S) MADE
		C1	Ground pins associated with JFS J5/J6 moved to be adjacent to each other to facilitate the interconnection of the ground pins
		C2	JFS J7 Moved 12-ax cable to centre of connector and grounded un-used signal triplet
		C2	JFS J1 Moved the pair of 12-ax to the centre of the connector
		C2	Added 5MΩ resistor to 300-mK harness as per SPIRE Block Diagram
		C3	Added drawing of 128-Way pin assignments
		C3	Corrected erroneous reference to PSW Bias in listing table
		C4	Corrected error in ground pin assignment on 128-Way
		C10/C12	Changed FPU J17/J18 to MDM 21 S and rearranged harness to conform to this. (including reallocation of the 128-Way)
		C10/C12	Changed pin allocations to FPU J27/J28/J29/J30 to bring into line with LAM design
		C11/C13	Provision for two SMEC launch latches incorporated
		C11/C13	Launch latches for BSM and SMEC rearranged on the 128-Way so that they are adjacent to each other to enable a single tail to be made from them
		C11/C13	Corrected BSM Launch Latch drive to be STP
0.9	15/3/02	I	Issued
	19/04/02	All	Cryoharness nomenclature updated to reflect the convention as used on Herschel. • WE to SVM CB = S Harness (in issue 0.9 this was the I Harness) • SVM CB to CVV Wall = I Harness (in issue 0.9 this was the E Harness) • CVV Wall to Cold Units = C Harness
	07/05/02	W1-W6	Corrected pin 14 name. From C_SHD to C_CMD_SHD
	14/05/02	F1-F16, F28	• Updated configuration of the BDA-JFET harnesses to indicate feedthrus instead of bulkhead connectors • Corrected sequencing of the harnesses • Corrected MDM51 Pin Allocation table to conform to JPL Wiring Schematic (Corrected U- and Y-)
		F2, F3, F4, F5, F6	Deleted description and referred to §4.5.1
		F1-F16, F28	Corrected connector gender of 51-way JFET MDM
		F1-F16, F28	Corrected information about backshells.
		F8	Deleted description and referred to §4.5.7
		F10, F11, F12	Deleted description and referred to §4.5.9
		F14	Deleted description and referred to §4.5.13
		W3, W4, W5, W6	Changed paragraph title to include both unit name and sub-unit name. (i.e. HSMCU changed to HSFCU (MCU) and HSSCU changed to HSFCU (SCU)
	15/05/02	All	Revised backshells. Updated notes 7 and 8 in the Introduction to reflect current design
	16/05/02	All	Added notes to Socket D-Connectors to indicate that the drawings indicate show the non-engaging face view.
		S2/S4	Moved inline connector (previously un-named) to the SVM-CB. Connector on S2 named JE and mating connector on S4 named PE.
		S/I/C Mechanical Drawings	Updated
		All	Removed any distinction between Flight and Ground Test configurations of the harnesses.
		S2/S4/Acronym List	Added Acronym PTC (Photometer Thermal Control) to refer to the 300-mK thermal control system.
		S2 Listing	Updated listing of the PTC
		I11	Corrected drawing of P23 to indicate a Socket gender
		S1-S13	Corrected statements about this harness connecting to the CVV. It now connects to

ISSUE	DATE	SECTION	CHANGE(S) MADE
			the SVM-CB.
		S10 and S12	Shutter EGSE connector on SVM is no longer D-Sub but Circular bayonette. Pin allocation is TBD. Connector is mounted on SVM-CB
		S11 and S13	Mechanisms launch latch sense connector on SVM is no longer D-Sub but Circular bayonette. Pin allocation is TBD. Connector is mounted on SVM-CB
		All	Ambiguity concerning the labelling of harnesses resolved. Forthwith connectors mounted on units are labelled “Unit Acronym Jxx” while floating connectors on harnesses that mate with the fixed units are labelled as “Unit Acronym Pxx”. “xx” refers to a number unique to the particular connector on the unit.
		S10	Inserted correct drawing of 128-Way Pin allocation for P11 tail
		S10	Settled on a consistent name between for the Cooler Tail. Changed all instances of Heater Tail to Cooler Tail.
		I10,I11, I12,I13	Moved skin connector from these harnesses to S10, S11, S12, S13
		C2	Removed extra description of JFS P2/P4
		C1	Corrected table that had the table rows incorrectly aligned for some of the pins in the 128-Way column
		C11	Added missing pin allocations on P25, P27, P29
		F19/F20	Changed from 21 Way to 37 Way MDM
		F16 thru F27	Added mechanical drawing + backshell part numbers
		F23	Harness lay-up as J25 not J23
		F24, F25, F26 and F27	SMEC has flying leads now.
		F25	As per C11 FPU P29 not FPU P27
		C10, S10, FCU J23 FPU J23	Changed name of SPIRE Optical Bench Temperature Channel to FPU Filter Temperature. Thermistor moved within FPU.
		S10	Incorrect diagram of 128-Way inserted. Updated with correct one
		S10 - FCU J23	Photometer and Spectrometer Detector Box Temperatures swapped in tail listing so as to conform to the drawing.
		P11	Cooler tail listing: corrected 128-way Evaporator Heat Switch Heater A+ to be pin # 55 and Evaporator Heat Switch Heater B+ to be pin #56
		P19, P21 and P23	Corrected drawings of 128-way connector; corrected numerous errors in tail listings.
		P11	HS Spect Stim 2% Heater: Corrected pin allocations on 128-Way
		Annex 7	Revised and updated.
		4.8.	Added section specifying the two extra harnesses required for the STM programme
		C2, Tables	Renumbered signals. Changed Signals 7 and 8 to Spare triplets A and B.
		C2, JFS P1	Added information to note in the Harness Layup drawing. Indicated that several triplets terminate on open pins on the 128-Way #2
		JFS P7	Removed spurious ground wire in Harness Layup drawing
		C1/C2/C4	Indications of 12-ax groupings added to Harness Tables
		C1	In table, removed NC from Bolometer Triplet Anti cross-talk wires and indicated that they connect to signal ground on pin 13.
		C1	Deleted bolometer ground wires in table.
		S3	Harness layup drawing: Corrected to PSW Heater 1, PSW Heater 2, PSW Heater 3…. Not PSW Heater 1, PSW Heater 3, PSW Heater 4
		JFP P27/P28	Added extra ground pin on 128-Way to conform with S3 Tails
		C3	PMW Heater A1 and PLW Heater were in incorrect positions. They have been swapped.
		C3	Ground pin incorrectly went to pin 65. Changed to connect to Pin 64
		C3	Tail listings: PMW Heater 1B and 2B connect to pin 65 not 91.
		S4	Clarified details of signal ground commoning on the 128-Way connector

ISSUE	DATE	SECTION	CHANGE(S) MADE
		S4 128-Way	Pin numbers for Sig. 5 corrected to be pins 52 and 53; Sig. 16- now on pin 56; Missing pins for Sig 34 inserted (Pins 108 and 109); Sig. 45+ now on 26.
		S11/P19	Corrected 128-Way pin allocation table for the BSM Launch Latch
		S11/P19	Corrected 128-Way pin allocation table for the Chop and Jiggle position sensors
		C11/FPU P25	Corrected Polarity error on Phot. Point Stim. Listing
		Scope	Updated
		T7/T8	Deleted pin allocation
		S/I	Removed requirements for overall bundle insulation on S/I harnesses
		S1/C1	Updated DCU P27 to include an FPU Faraday Shield Link wire instead of Ground wire.
		S10/C10	Removed erroneous indication of STQ (should be UTQ) on the 128-Way pin allocation drawings for the heater functions
		Harness Listing	Changed Bolometer impedance requirement to 500 Ω
			Added columns indicating use of subsystem in various instrument modes
			Updated values of LVDT Sec Resistance
		S1-S10	Flipped view of 128-Way connectors to show view of exposed contacts
		4.6.1	Updated and corrected drawing of JFET Back harnesses
		4.6.2	Updated and corrected harness table for Photometer JFET BP Harness
		4.6.3	Updated and corrected harness table for Spectrometer JFET BP Harness
		S10/12,C10/12, Harness Listing	Shutter deleted. Skin connectors at SVM-CB renamed.
		S1, C1	PTC JFET Heater ground removed from spectrometer JFET heater ground and joined to the PTC ground within the 128-way
1.0	5/7/02		Issued

ACRONYM LIST

Term	Meaning
ADC	Analogue to Digital Converter
AIV	Assembly, Integration and Verification
AME	Absolute Measurement Error
AOCS	Attitude and Orbit Control System
APART	Arizona's Program for the Analysis of Radiation Transfer
APE	Absolute Pointing Error
ASAP	Advanced Systems Analysis Program
AVM	Avionics Model
BDA	Bolometer Detector Assembly
BFL	Back Focal Length
BRO	Breault Research Organization
BSM	Beam Steering Mirror
CDMS	Command and Data Management System
CDMU	Command and Data Management Unit
CDR	Critical Design Review
CMOS	Complimentary Metal Oxide Silicon
CPU	Central Processing Unit
CVV	Cryostat Vacuum Vessel
DAC	Digital to Analogue Converter
DAQ	Data Acquisition
DCU	Detector Control Unit = HSDCU
DPU	Digital Processing Unit = HSDPU
DQE	Detective Quantum Efficiency
DSP	Digital Signal Processor
EDAC	Error Detection and Correction
EGSE	Electrical Ground Support Equipment
EMC	Electro-magnetic Compatibility
EMI	Electro-magnetic Interference
ESA	European Space Agency
FCU	FCU Control Unit = HSFCU
FIR	Far Infrared
FIRST	Far Infra-Red and Submillimetre Telescope
FOV	Field of View
F-P	Fabry-Perot
FPGA	Field Programmable Gate Array
FPU	Focal Plane Unit
FTS	Fourier Transform Spectrometer
FWHM	Full Width Half maximum
GSFC	Goddard Space Flight Center
HK	House Keeping
HOB	Herschel Optical Bench
HPDU	Herschel Power Distribution Unit
HSDCU	Herschel-SPIRE Detector Control Unit
HSDPU	Herschel-SPIRE Digital Processing Unit
HSFCU	Herschel-SPIRE FPU Control Unit
HSO	Herschel Space Observatory
IF	Interface
IID-A	Instrument Interface Document - Part A
IID-B	Instrument Interface Document - Part B
IMF	Initial Mass Function
IR	Infrared

Term	Meaning
IRD	Instrument Requirements Document
IRTS	Infrared Telescope in Space
ISM	Interstellar Medium
ISO	Infrared Space Observatory
JFET	Junction Field Effect Transistor
LCL	Latching Current Limiter
LIA	Lock-In Amplifier
LVDT	Linear Variable Differential Transformer
LWS	Long Wave Spectrometer (an instrument used on ISO)
MAC	Multi Axis Controller
MCU	Mechanism Control Unit = HSMCU
M-P	Martin-Puplett
NEP	Noise Equivalent Power
NTD	Neutron Transmutation Doped
OBS	On-Board Software
OMD	Observing Modes Document
OPD	Optical Path Difference
PACS	Photodetector Array Camera and Spectrometer
PCAL	Photometer Calibration source
PID	Proportional, Integral and Differential (used in the context of feedback control loop architecture)
PLW	Photometer, Long Wavelength
PMW	Photometer, Medium Wavelength
POF	Photometer Observatory Function
PROM	Programmable Read Only Memory
PSW	Photometer, Short Wavelength
PTC	Photometer Thermal Control
PUS	Packet Utilisation Standard
RMS	Root Mean Squared
SCAL	Spectrometer Calibration Source
SED	Spectral Energy Distribution
SMEC	Spectrometer Mechanics
SMPS	Switch Mode Power Supply
SOB	SPIRE Optical Bench
SOF	Spectrometer Observatory Function
SPIRE	Spectral and Photometric Imaging Receiver
SRAM	Static Random Access Memory
SSSD	SubSystem Specification Document
STP	Screened Twisted Pair
STQ	Screened Twisted Quad
STT	Screened Twisted Triple
SVM	Service Module
SVM-CB	Service Module Connector Bracket. Mounted on top of the SVM. Used to connect I and S Harnesses
TBC	To Be Confirmed
TBD	To Be Determined
TC	Thermal Control
TP	Twisted Pair (unscreened)
TQ	Twisted Quad (unscreened)
TT	Twisted Triple (unscreened)
URD	User Requirements Document
UV	Ultra Violet
WE	Warm Electronics
ZPD	Zero Path Difference

DISTRIBUTION LIST

Institute	Holder	Issue/ Revision and Distribution Date							
		0.3 10/5/01	0.4 10/8/01	0.5 22/8/01	0.6 15/9/01	0.7 19/9/01	0.8 2/11/01	0.9 10/3/02	1.0 05/07/02
RAL	Delderfield	x	x	x	x	x	x	x	X
	Swinyard	x	x	x	x	x	x	x	x
	Griffin	x	x	x	x	x	x	x	x
	Parker	x	x	x	x	x	x	x	x
	King	x	x	x	x	x	x	x	x
	Smith								
QMW/	Griffin	x	x	x	x	x	x	x	x
Cardiff	Hargrave	x	x	x	x	x	x	x	x
ATC	Cunningham	x	x	x	x	x	x	x	x
	Stobie	x	x	x	x	x	x	x	x
MSSL	Winter	x	x	x	x	x	x	x	x
	Brockley-Blatt							x	x
CEA-SBT	Duband	x	x	x	x	x	x	x	x
CEA-SAP	Cara	x	x	x	x	x	x	x	x
	Auguères	x	x	x	x	x	x	x	x
	Pinsard	x	x	x	x	x	x	x	x
JPL	Bock	x	x	x	x	x	x	x	x
	Lilienthal	x	x	x	x	x	x	x	x
	Hristov	x	x	x	x	x	x	x	x
	Huston							x	x
LAM	Pouliquen	x	x	x	x	x	x	x	x
	Ferrand					x	x	x	x
Can.	Taylor	x	x	x	x	x	x	x	x
	Peterson	x	x	x	x	x	x	x	x
ESA	Jackson	x	x	x	x	x	x	x	x
	Heske	x	x	x	x	x	x	x	x
	Bruston		x	x	x	x	x	x	x
CESR	Pons	x	x	x	x	x	x	x	x
IFSI	Giorgio	x	x	x	x	x	x	x	x
	Orfei	x	x	x	x	x	x	x	x
Alenia	Cesa								x
ALCATEL	Lund		x	x	x	x	x	x	x
	Collaudin							x	x
Astrium	Fass				x	x	x	x	x
	Hoelzle					x	x	x	x

CONTENTS

CHANGE RECORD **2**
ACRONYM LIST **8**
DISTRIBUTION LIST **10**
1. SCOPE **13**
2. APPLICABLE DOCUMENTS **13**
2.1 REFERENCE DOCUMENTS 13
3. INTRODUCTION **14**
4. HARNESS DETAILS **17**
4.1 WARM HARNESSES 17
4.1.1 W1- HSDPU-P to HSDCU-P *17*
4.1.2 W2 - HSDPU-R to HSDCU-R *18*
4.1.3 W3 - HSDPU-P to HSFCU (SCU)-P *19*
4.1.4 W4 - HSDPU-R to HSFCU (SCU)-R *20*
4.1.5 W5 - HSDPU-P to HSFCU (MCU)-P *21*
4.1.6 W6 - HSDPU-R to HSFCU (MCU)-R *22*
4.1.7 W7 - HSFCU-P to HSDCU-P *23*
4.1.8 W8 - HSFCU-R to HSDCU-R *24*
4.2 SVM CRYOHARNESSES 25
4.2.1 S1 SVM-CB 1 – DRCU (Type3) Spectrometer Biases and SLW *25*
4.2.2 S2 SVM-CB 2 – DRCU (Type 4) SSW and PTC *33*
4.2.3 S3 SVM-CB 3 – DRCU (Type 2) Photometer Biases *41*
4.2.4 S4 SVM-CB 4 – DRCU (Type 1) PMW *49*
4.2.5 S5 SVM-CB 5 – DRCU (Type 1) PMW *54*
4.2.6 S6 SVM-CB 6 – DRCU (Type 1) PLW *59*
4.2.7 S7 SVM-CB 7 – DRCU (Type 1) PSW *60*
4.2.8 S8 SVM-CB 8 – DRCU (Type 1) PSW *61*
4.2.9 S9 SVM-CB 9 – DRCU (Type 1) PSW *62*
4.2.10 S10 SVM-CB 10 – DRCU AUX-P *63*
4.2.11 S11 SVM-CB 11 – DRCU DRV-P *70*
4.2.12 S12 SVM-CB 12 – DCU AUX-R *82*
4.2.13 S13 SVM-CB 13 – DCU DRV-R *83*
4.3 EXTERNAL HARNESSES 84
4.3.1 I1 SVM-CB 1 – CVV1 ..... *84*
4.3.2 I2 SVM-CB 2 – CVV2 ..... *85*
4.3.3 I3 SVM-CB 3 – CVV 3 ..... *86*
4.3.4 I4 SVM-CB 4 – CVV 4 ..... *87*
4.3.5 I5 SVM-CB 5 – CVV 5 ..... *88*
4.3.6 I6 SVM-CB 6 – CVV 6 ..... *89*
4.3.7 I7 SVM-CB 7 – CVV 7 ..... *90*
4.3.8 I8 SVM-CB 8 – CVV 8 ..... *91*
4.3.9 I9 SVM-CB 9 – CVV 9 ..... *92*
4.3.10 I10 SVM-CB 10 – CVV 10 ..... *93*
4.3.11 I11 SVM-CB 11 – CVV 11 ..... *94*
4.3.12 I12 SVM-CB 12 – CVV 12 ..... *95*
4.3.13 I13 SVM-CB 13 – CVV 13 ..... *96*
4.4 CRYOGENIC HARNESSES 97
4.4.1 C1 CVV1 to HSJFS Type3 ..... *97*
4.4.2 C2 CVV2 to HSJFS Type4 ..... *103*
4.4.3 C3 CVV3 to HSJFP Type2 ..... *111*
4.4.4 C4 CVV4 to HSJFP Type1 ..... *119*
4.4.5 C5 CVV5 to HSJFP Type1 ..... *125*
4.4.6 C6 CVV6 to HSJFP Type1 ..... *130*
4.4.7 C7 CVV7 to HSJFP Type1 ..... *131*
4.4.8 C8 CVV8 to HSJFP Type1 ..... *132*
4.4.9 C9 CVV9 to HSJFP Type1 ..... *133*
4.4.10 C10 CVV10 to HSFPU AUX-P *134*
4.4.11 C11 CVV11 to HSFPU DRV-P *142*
4.4.12 C12 CVV12 to HSFPU AUX-R *149*
4.4.13 C13 CVV13 to HSFPU DRV-R *150*

4.5 FPU HARNESSES 151
4.5.1 F1 PSW J01 to HSJFP J29 ..... *151*
4.5.2 F2 PSW J02 to HSJFP J30 ..... *153*
4.5.3 F3 PSW J03 to HSJFP J31 ..... *153*
4.5.4 F4 PSW J04 to HSJFP J32 ..... *153*
4.5.5 F5 PSW J05 to HSJFP J33 ..... *153*
4.5.6 F6 PSW J06 to HSJFP J34 ..... *153*
4.5.7 F7 PLW J01 to HSJFP J35 ..... *154*
4.5.8 F8 PLW J02 to HSJFP J36 ..... *154*
4.5.9 F9 PMW J01 to HSJFP J37 ..... *155*
4.5.10 F10 PMW J02 to HSJFP to J38 ..... *155*
4.5.11 F11 PLW J03 to HSJFP to J39 ..... *155*
4.5.12 F12 PLW J04 to HSJFP to J40 ..... *155*
4.5.13 F13 SSW J05 to HSJFS J11 ..... *156*
4.5.14 F14 SSW J06 to HSJFS J12 ..... *156*
4.5.15 F15 SLW J01 to HSJFS J13 ..... *157*
4.5.16 F16 COOLER-P to FA *158*
4.5.17 F17 COOLER-R to FD *159*
4.5.18 F18 SPECT_STIM-P to FA *160*
4.5.19 F19 SPECT_STIM-R to FD *161*
4.5.20 F20 THERM-P from FB *162*
4.5.21 F21 THERM-R from FE *163*
4.5.22 F22 BSM-P to FB *164*
4.5.23 F23 BSM-R to FE *165*
4.5.24 F24 SMEC Launch (Prime) connected to FPU FC J1 ..... *166*
4.5.25 F25 SMEC Control (Prime) connected to FPU FC J2 ..... *167*
4.5.26 F26 SMEC Launch (Red.) connected to FPU FF J1 ..... *168*
4.5.27 F27 SMEC Control (Red.) connected to FPU FF J2 ..... *169*
4.5.28 F28 Photometer Thermal Control to HSJFS J14 ..... *170*
4.6 JFET UNIT BACK-HARNESSES 171
4.6.1 Overview *171*
4.6.2 BP-Photometer *173*
4.6.2.1 HSJFP – BP1 (PSW) 174
4.6.2.2 HSJFP – BP2 (PMW/PLW) 176
4.6.3 BS-Spectrometer *178*
4.7 TEST HARNESSES 181
4.7.1 T1 1553 Bus A *181*
4.7.2 T2 1553 Bus B *182*
4.7.3 T3 DPU-P Power *183*
4.7.4 T4 DPU-R Power *184*
4.7.5 T5 FCU-P Power *185*
4.7.6 T6 FCU-R Power *186*
4.7.7 T7 Mechanisms Launch Lock Confirm (Prime) *186*
4.7.8 T8 Mechanisms Launch Lock Confirm (Redundant) *186*
4.8 STM THERMOMETRY HARNESSES 187
4.8.1 External STM *187*
4.8.2 Internal STM *188*
ANNEX 1 – INTERNAL CRYOSTAT WIRING LIST 189
ANNEX 2 – EXTERNAL CRYOSTAT WIRING LIST 194
ANNEX 3 - BDA CHANNELS 200
ANNEX 4 - WHAT IS 12-AX? 200
ANNEX 5 – CVV BULKHEAD EMI BACKSHELLS 201
ANNEX 6 - SPIRE GROUNDING DIAGRAM 202
ANNEX 7 – PTC CRYOHARNESSING 203

1. SCOPE

This document at its latest issue is the primary definition of all HERSCHEL SPIRE flight harnesses.

It is an applicable document in the SPIRE IID-B, and as such is called up, and is applicable in full to all SPIRE subsystems

It also contains information covering some test harnesses, but some harnesses / back-planes that stay entirely within sub-systems are not necessarily included.

Electrical and physical data are included, included contact functions, screening details, hold-down/shape details if appropriate, etc. This information will become more detailed as designs are refined until it can be used as a basis for harness manufacture. The detailed harness shapes for the F-Harnesses are currently not included within this document..

A function count/format/sizing summary list for the C/I/S series cryoharness is appended as an Annex and may, together with other summary information, be edited into the SPIRE IID-B. Spire is unusual in that these harnesses are not standard I/Fs between separately grounded systems but rather links within extended analogue systems. As such, the conductor count/sizing summary list alone is not an adequate specification to ensure the required performance, particularly with respect to consistency between ground calibration and flight performance.

The SPIRE instrument-grounding diagram is appended.

2. APPLICABLE DOCUMENTS

ID	TITLE	NUMBER
AD-1	SPIRE Development Plan and Model Philosophy	SPIRE-RAL-PRJ-000035

2.1 REFERENCE DOCUMENTS

ID	TITLE	NUMBER	ISSUE	DATE
RD-1	SPIRE Block Diagram	SPIRE-RAL-DWG-000646	4.5	26 June 2002

3. INTRODUCTION

The overall HERSCHEL SPIRE harnesses are configured as shown:

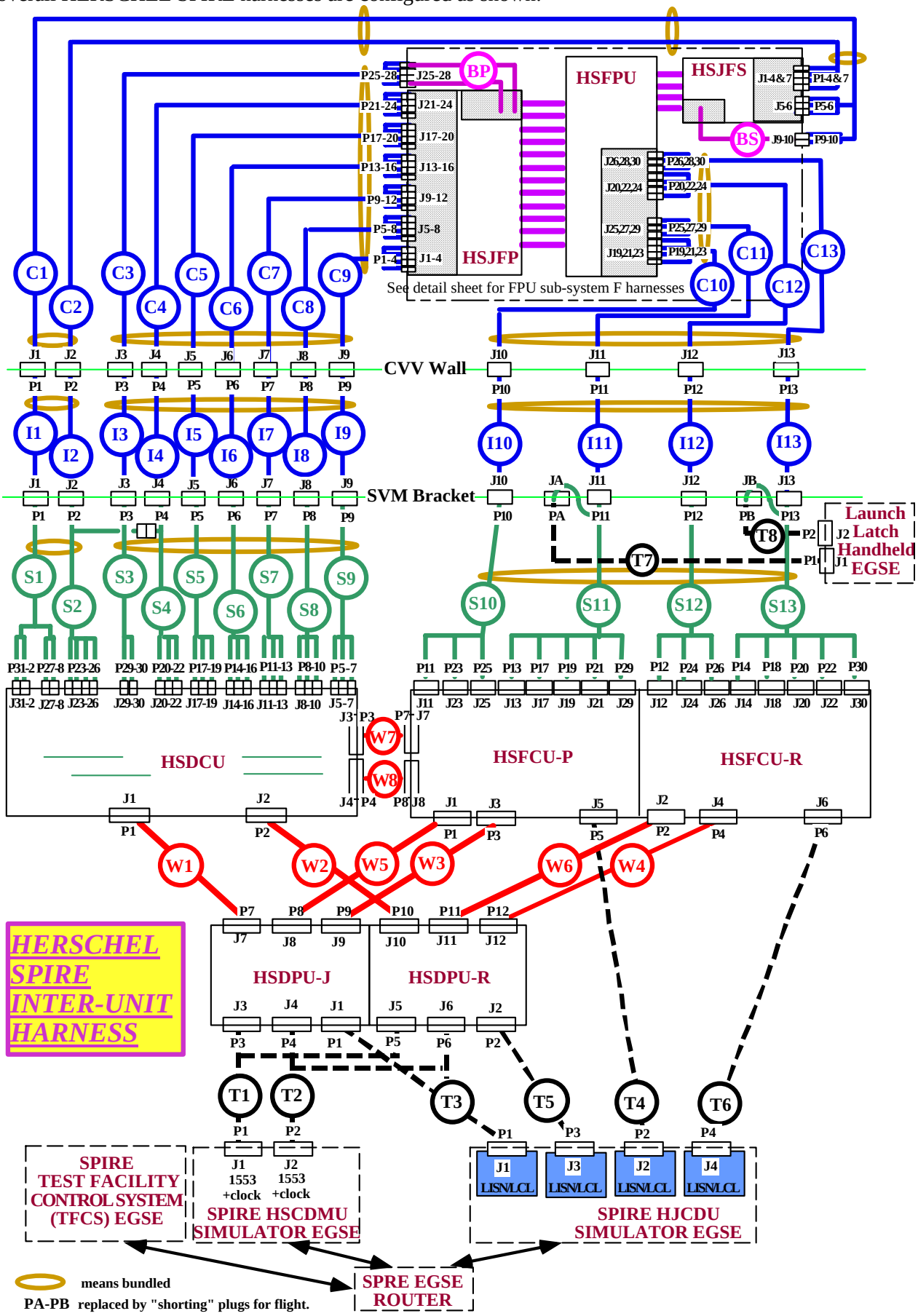

The details in the HSFPU are as follows:

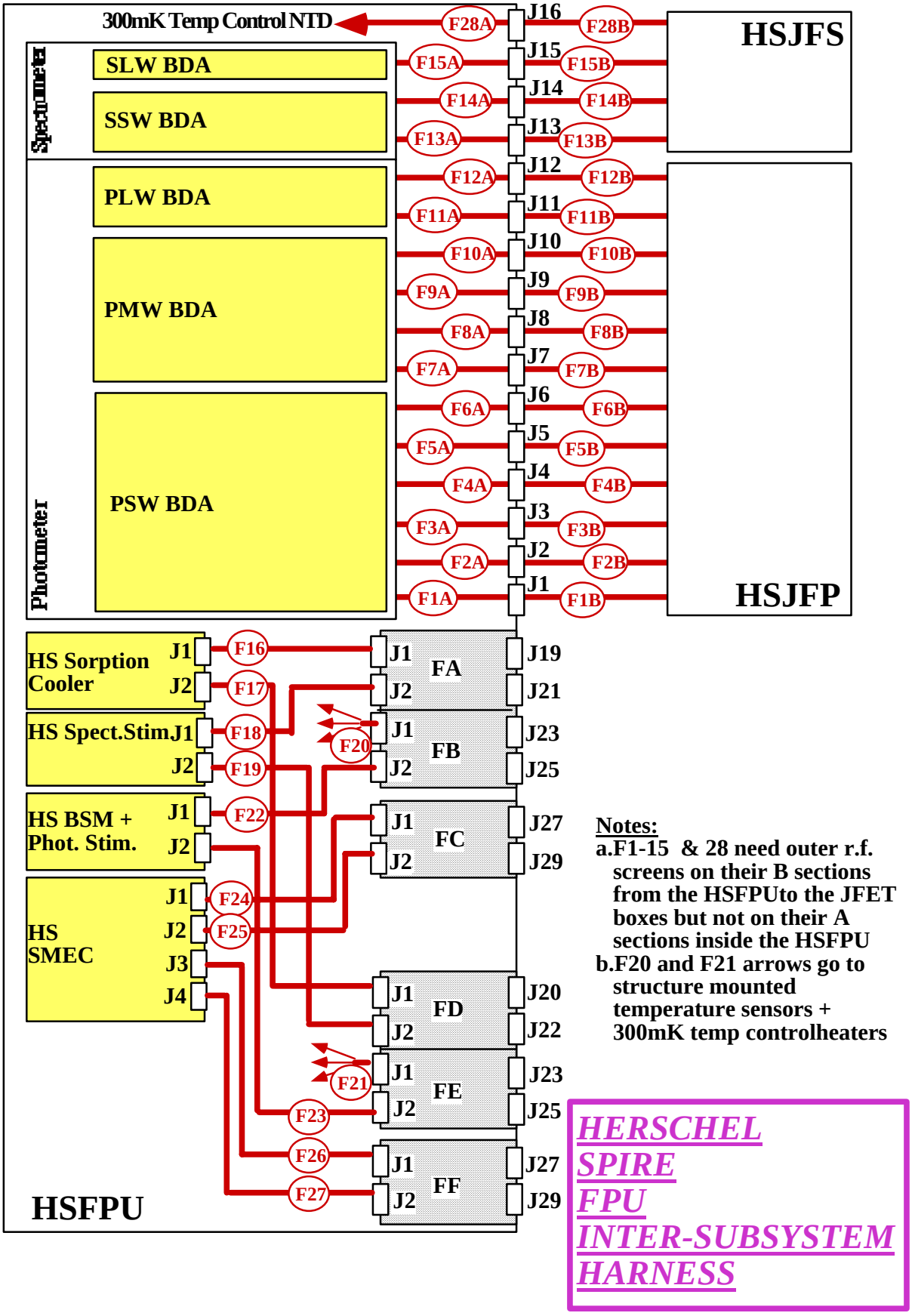

Notes:

1. There are some "loop" harnesses that start and terminate within the same unit, such as on the HS DCU. These are treated as parts of the units rather than instrument harness.
2. The HSJFS + HSJFP "back-harnesses", BS and BP respectively, although supplied as part of the JFET units are now within the scope of this document as this permits the instrument's architecture to be followed more clearly.
3. The Test harnesses, type T, are shown dashed as they are non-flight and will be substituted by ESA Contractor furnished items as SPIRE is integrated on to HERSCHEL. They will be RAL furnished for use with the instrument EGSE, but individual suppliers will need to make their own versions for unit level testing before delivery to the instrument.
4. The Cryogenic and SVM harnesses, types C and S, are RAL furnished for instrument level calibration but again are substituted by ESA Contractor furnished items as SPIRE is integrated on to HERSCHEL. Harnesses of type "I" are not needed for instrument level calibration.
5. The provision of the FPU harnesses (F series) is the responsibility of the institute that sources the sub-system to which they connect, noting that the structure subsystem group covers the temperature sensors.
6. The model philosophy definition, in AD-1, can be used to determine how many versions of each harness are required for the programme. For SPIRE it is necessary that most harnesses, of whatever version, are EMC and thermally representative.
7. For the D-Subminiature connectors on the SVM that interface with the S-Cryoharnesses or with Herschel, the following Glenair backshells are used:
    a. For Top Entry: 557-T-357 M
    b. For End Entry: 557-E-359 M
    c. For 45° Entry: 557-B-357 M

    For the D-Subminiature connectors on the SVM that are internal SPIRE to SPIRE interfaces, the following Glenair backshells are used:
    a. For Top Entry: 557-T-051 M
    b. For End Entry: 557-E-113 M
    c. For 45° Entry: 557-102 M or 557-103 M according to the direction the harness exits the backshell
8. For the MDM connectors inside the Herschel Cryostat supplied by the ESA Contractor, the following backshells are used:
    a. For Top entry: 507-T-196 M
    b. For End entry: 507-E-199 M
    c. For 45° entry: 507-E-196 M
9. Some inner shields of signal groups within a single harness are connected together at the connectors (MDM, D-Sub and 128-Way) to form an analogue ground reference network for EMC and anti-crosstalk reasons. This is indicated in the drawings of the Harness Layups and on the tables of the pin assignments of the 128-Way connectors by the letters A, B, C and D. When there are ground planes formed on several tails of the same harness, these letters are suffixed by digits to differentiate between them. This convention of assigning a letter to commoned grounds is adhered to in the tail listing tables.

4. HARNESS DETAILS

4.1 Warm Harnesses

4.1.1 W1- HSDPU-P to HSDCU-P

Overall Mechanical Drawing

1:1 harness of insulated screened 28AWG twisted pairs with backshell to backshell screen, covered on outside with insulation.

Connector/Backshell Details

Prime Side Harness

DBMA 25 P + Glenair 557 - E - 113 - M - 3 - TBD - H - 0 - TBD to DCU J1

DBMA 25 S + Glenair 557 - 102 - M - 3 - TBD - H - 0 - TBD to DPU J7

Harness Layup

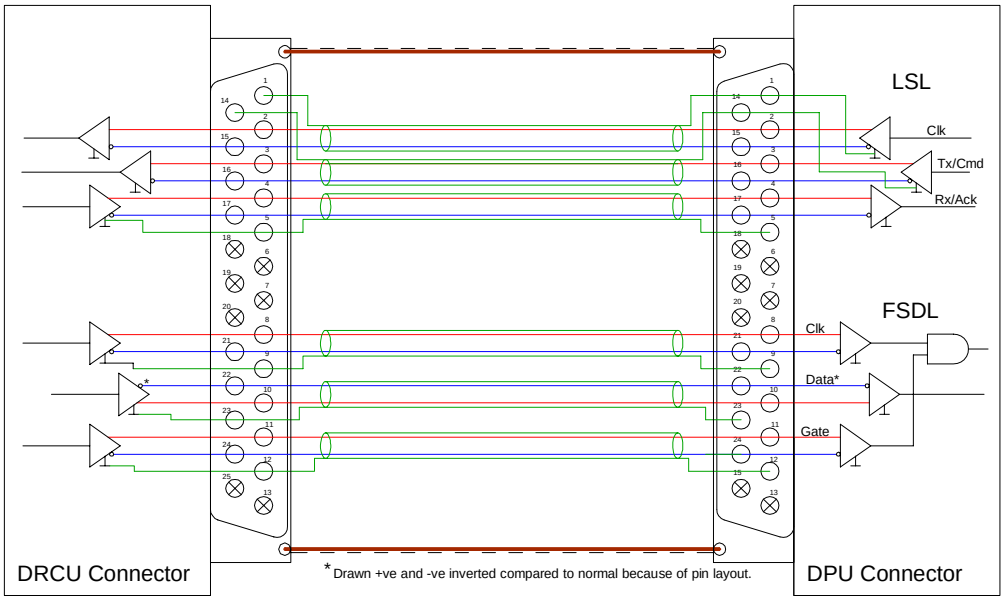

Contact Details: Wired 1:1 in harness

Signal Name	Pin	Wire	Signal Name	Pin	Wire
C_CLK_SHD	1		C_CMD_SHD	14	
C_CLK_DCU_P+	2	28AWG STP-A	C_CLK_DCU_P-	15	28AWG STP-A
C_CMD_DCU_P+	3	28AWG STP-B	C_CMD_DCU_P-	16	28AWG STP-B
C_RES_DCU_P+	4	28AWG STP-C	C_RES_DCU_P-	17	28AWG STP-C
C_RES_SHD	5			18	
	6			19	
	7			20	
D_CLK_DCU_P+	8	28AWG STP-D	D_CLK_DCU_P-	21	28AWG STP-D
D_CLK_SHD	9		D_DAT_DCU_P-	22	28AWG STP-E
D_DAT_DCU_P+	10	28AWG STP-E	D_SHD	23	
D_GAT_DCU_P+	11	28AWG STP-F	D_GAT_DCU_P-	24	28AWG STP-E
D_GAT_SHD	12			25	
	13				
RF Overshield	EMC Backshell-Backshell				

4.1.2 W2 - HSDPU-R to HSDCU-R

Overall Mechanical Drawing

1:1 harness of insulated screened 28AWG twisted pairs with backshell to backshell screen, covered on outside with insulation.

Connector/Backshell Details
Redundant Side Harness

DBMA 25 P + Glenair 557 - E - 113 - M - 3 - TBD - H - 0 - TBD to DCU J2
DBMA 25 S + Glenair 557 - 103 - M - 3 - TBD - H - 0 - TBD to DPU J10

Harness Layup

As W1

Contact Details
Wired 1:1 in harness

Signal Name	Pin	Wire	Signal Name	Pin	Wire
C_CLK_SHD	1		C_CMD_SHD	14	
C_CLK_DCU_R+	2	28AWG STP-A	C_CLK_DCU_R-	15	28AWG STP-A
C_CMD_DCU_R+	3	28AWG STP-B	C_CMD_DCU_R-	16	28AWG STP-B
C_RES_DCU_R+	4	28AWG STP-C	C_RES_DCU_R-	17	28AWG STP-C
C_RES_SHD	5			18	
	6			19	
	7			20	
D_CLK_DCU_R+	8	28AWG STP-D	D_CLK_DCU_R-	21	28AWG STP-D
D_CLK_SHD	9		D_DAT_DCU_R-	22	28AWG STP-E
D_DAT_DCU_R+	10	28AWG STP-E	D_SHD	23	
D_GAT_DCU_R+	11	28AWG STP-F	D_GAT_DCU_R-	24	28AWG STP-E
D_GAT_SHD	12			25	
	13				
RF Overshield	EMC Backshell-Backshell				

4.1.3 W3 - HSDPU-P to HSFCU (SCU)-P

Overall Mechanical Drawing

1:1 harness of insulated screened 28AWG twisted pairs with backshell to backshell screen, covered on outside with insulation.

Connector/Backshell Details
Redundant Side Harness

DBMA 25 P + Glenair 557 - E - 113 - M - 3 - TBD - H - 0 - TBD to FCU J3
DBMA 25 S + Glenair 557 - E - 113 - M - 3 - TBD - H - 0 TBD to DPU J9

Harness Layup

As W1

Contact Details
Wired 1:1 in harness

Signal Name	Pin	Wire	Signal Name	Pin	Wire
C_CLK_SHD	1		C_CMD_SHD	14	
C_CLK_SCU_P+	2	28AWG STP-A	C_CLK_SCU_P-	15	28AWG STP-A
C_CMD_SCU_P+	3	28AWG STP-B	C_CMD_SCU_P-	16	28AWG STP-B
C_RES_SCU_P+	4	28AWG STP-C	C_RES_SCU_P-	17	28AWG STP-C
C_RES_SHD	5			18	
	6			19	
	7			20	
D_CLK_SCU_P+	8	28AWG STP-D	D_CLK_SCU_P-	21	28AWG STP-D
D_CLK_SHD	9		D_DAT_SCU_P-	22	28AWG STP-E
D_DAT_SCU_P+	10	28AWG STP-E	D_SHD	23	
D_GAT_SCU_P+	11	28AWG STP-F	D_GAT_SCU_P-	24	28AWG STP-E
D_GAT_SHD	12			25	
	13				
RF Overshield	EMC Backshell-Backshell				

4.1.4 W4 - HSDPU-R to HSFCU (SCU)-R

Overall Mechanical Drawing

1:1 harness of insulated screened 28AWG twisted pairs with backshell to backshell screen, covered on outside with insulation.

Connector/Backshell Details
Redundant Side Harness

DBMA 25 P + Glenair 557 - E - 113 - M - 3 - TBD - H - 0 - TBD to FCU J4
DBMA 25 S + Glenair 557 - E - 113 - M - 3 - TBD - H - 0 TBD to DPU J12

Harness Layup

As W1

Contact Details
Wired 1:1 in harness

Signal Name	Pin	Wire	Signal Name	Pin	Wire
C_CLK_SHD	1		C_CMD_SHD	14	
C_CLK_SCU_R+	2	28AWG STP-A	C_CLK_SCU_R-	15	28AWG STP-A
C_CMD_SCU_R+	3	28AWG STP-B	C_CMD_SCU_R-	16	28AWG STP-B
C_RES_SCU_R+	4	28AWG STP-C	C_RES_SCU_R-	17	28AWG STP-C
C_RES_SHD	5			18	
	6			19	
	7			20	
D_CLK_SCU_R+	8	28AWG STP-D	D_CLK_SCU_R-	21	28AWG STP-D
D_CLK_SHD	9		D_DAT_SCU_R-	22	28AWG STP-E
D_DAT_SCU_R+	10	28AWG STP-E	D_SHD	23	
D_GAT_SCU_R+	11	28AWG STP-F	D_GAT_SCU_R-	24	28AWG STP-E
D_GAT_SHD	12			25	
	13				
RF Overshield	EMC Backshell-Backshell				

4.1.5 W5 - HSDPU-P to HSFCU (MCU)-P

Overall Mechanical Drawing

1:1 harness of insulated screened 28AWG twisted pairs with backshell to backshell screen, covered on outside with insulation.

Connector/Backshell Details
Redundant Side Harness

DBMA 25 P + Glenair 557 - E - 113 - M - 3 - TBD - H - 0 - TBD to FCU J1
DBMA 25 S + Glenair 557 - 102 - M - 3 - TBD - H - 0 TBD to DPU J8

Harness Layup

As W1

Contact Details
Wired 1:1 in harness

Signal Name	Pin	Wire	Signal Name	Pin	Wire
C_CLK_SHD	1		C_CMD_SHD	14	
C_CLK_MCU_P+	2	28AWG STP-A	C_CLK_MCU_P-	15	28AWG STP-A
C_CMD_MCU_P+	3	28AWG STP-B	C_CMD_MCU_P-	16	28AWG STP-B
C_RES_MCU_P+	4	28AWG STP-C	C_RES_MCU_P-	17	28AWG STP-C
C_RES_SHD	5			18	
	6			19	
	7			20	
D_CLK_MCU_P+	8	28AWG STP-D	D_CLK_MCU_P-	21	28AWG STP-D
D_CLK_SHD	9		D_DAT_MCU_P-	22	28AWG STP-E
D_DAT_MCU_P+	10	28AWG STP-E	D_SHD	23	
D_GAT_MCU_P+	11	28AWG STP-F	D_GAT_MCU_P-	24	28AWG STP-E
D_GAT_SHD	12			25	
	13				
RF Overshield	EMC Backshell-Backshell				

4.1.6 W6 - HSDPU-R to HSFCU (MCU)-R

Overall Mechanical Drawing

1:1 harness of insulated screened 28AWG twisted pairs with backshell to backshell screen, covered on outside with insulation.

Connector/Backshell Details
Redundant Side Harness

DBMA 25 P + Glenair 557 - E - 113 - M - 3 - TBD - H - 0 - TBD to FCU J2
DBMA 25 S + Glenair 557 - 103 - M - 3 - TBD - H - 0 TBD to DPU J11

Harness Layup

As W1

Contact Details
Wired 1:1 in harness

Signal Name	Pin	Wire	Signal Name	Pin	Wire
C_CLK_SHD	1		C_CMD_SHD	14	
C_CLK_MCU_R+	2	28AWG STP-A	C_CLK_MCU_R-	15	28AWG STP-A
C_CMD_MCU_R+	3	28AWG STP-B	C_CMD_MCU_R-	16	28AWG STP-B
C_RES_MCU_R+	4	28AWG STP-C	C_RES_MCU_R-	17	28AWG STP-C
C_RES_SHD	5			18	
	6			19	
	7			20	
D_CLK_MCU_R+	8	28AWG STP-D	D_CLK_MCU_R-	21	28AWG STP-D
D_CLK_SHD	9		D_DAT_MCU_R-	22	28AWG STP-E
D_DAT_MCU_R+	10	28AWG STP-E	D_SHD	23	
D_GAT_MCU_R+	11	28AWG STP-F	D_GAT_MCU_R-	24	28AWG STP-E
D_GAT_SHD	12			25	
	13				
RF Overshield	EMC Backshell-Backshell				

4.1.7 W7 - HSFCU-P to HSDCU-P

Overall Mechanical Drawing

1:1 harness of insulated screened TBD AWG conductors, backshell to backshell screen, covered on outside with insulation.

Connector/Backshell Details

Prime side secondary power distribution harness

DBMA 25 P + Glenair 550 - E - 039 - M - 3 - TBD - H - 0 - TBD to FCU J7
DBMA 25 S + Glenair 550 - E - 039 - M - 3 - TBD - H - 0 - TBD to DCU J3

Harness Layup

Contact Details

Pin Number	Signal
1	LIA_P_P9V
2	LIA_P_GND9V
3	LIA_P_N9V
4	LIA_S_P9V
5	LIA_S_GND9V
6	LIA_S_N9V
7	PDAQ_P9V
8	PDAQ_GND9V
9	PDAQ_N9V
10	PDAQ_P5V
11	LIA_S_P5V
12	LIA_P_P5V
13	Chassis
14	LIA_P_P9V
15	LIA_P_GND9V
16	LIA_P_N9V
17	LIA_S_P9V
18	LIA_S_GND9V
19	LIA_S_N9V
20	PDAQ_P9V
21	PDAQ_GND9V
22	PDAQ_N9V
23	PDAQ_GND9V
24	LIA_P_GND5V
25	LIA_S_GND5V

4.1.8 W8 - HSFCU-R to HSDCU-R

Overall Mechanical Drawing

As per W7

Connector/Backshell Details

Prime side secondary power distribution harness

DBMA 25 P + Glenair 550 - E - 039 - M - 3 - TBD - H - 0 - TBD to FCU J8

DBMA 25 S + Glenair 550 - E - 039 - M - 3 - TBD - H - 0 - TBD to DCU J4

Harness Layup

As W7

Contact Details

As W7

4.2 SVM Cryoharnesses

The individual conductors for this harness are 28/30 AWG stranded Copper. This gives very low impedance, relevant for the bolometer channels, which would otherwise be susceptible to Johnson noise contributions from this harness.

4.2.1 S1 SVM-CB 1 – DRCU (Type3) Spectrometer Biases and SLW

Overall Mechanical Drawing

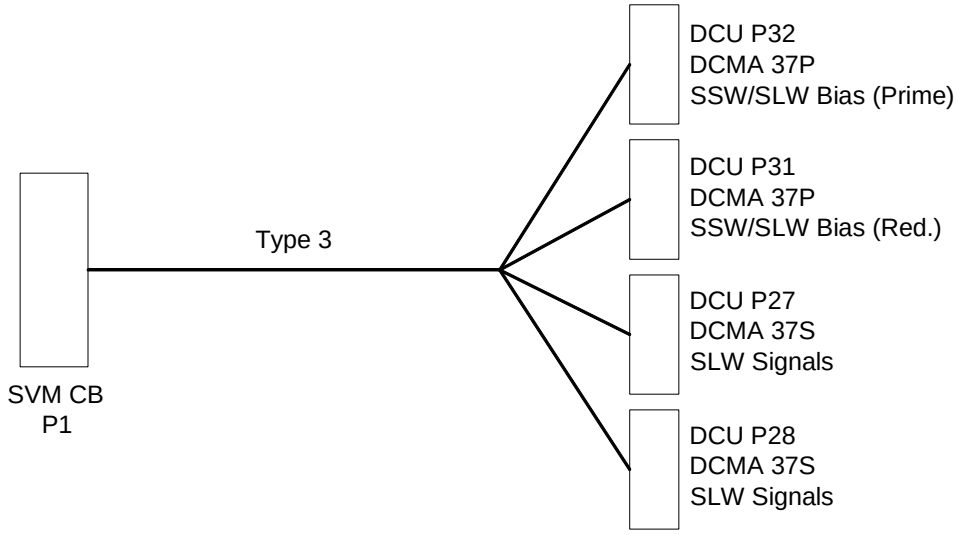

SPIRE S1

Connector/Backshell Details:

DCMA	37	S	+	Glenair 557-E-359-M-4 to	DCU J27	DCU-JFS	(End Entry Backshell)
DCMA	37	S	+	Glenair 557-B-357-M-4 to	DCU J28	DCU-JFS	(45° Entry Backshell)
DCMA	37	P	+	Glenair 557-B-357-M-4 to	DCU J31	Spect. Bias (Prime)	(45° Entry Backshell)
DCMA	37	P	+	Glenair 557-B-357-M-4 to	DCU J32	Spect. Bias (Red.)	(45° Entry Backshell)

Note that within the bias tails to DCU J31/J32 the different “BDA” analogue grounds are kept separate.

Harness Lay-up

Two Bolometer Tails Thus:

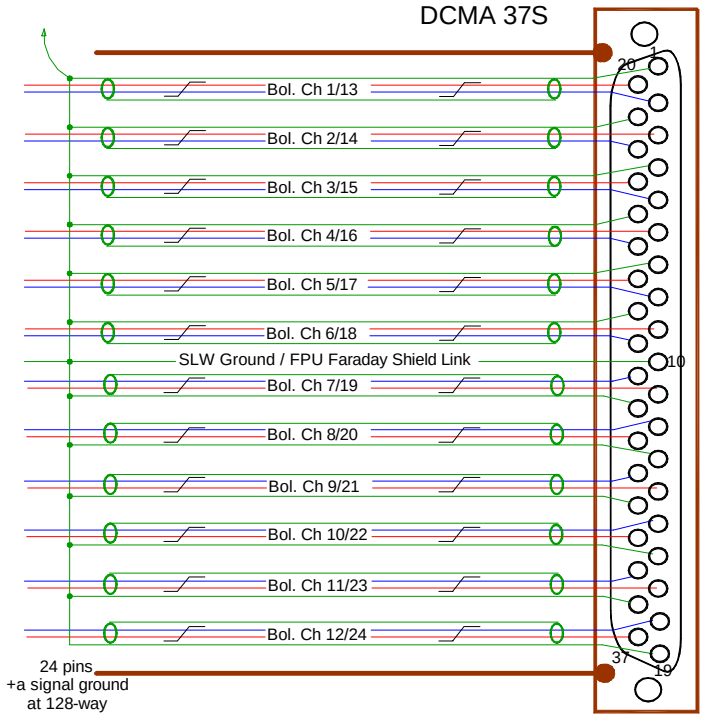

12 Channel Bolometer SLW Tail (DCU P27/P28)

· 12 Insulated STPs
· 1 Insulated Single Wire

· P27 Carries bolometer signals 1-12 and FPU Faraday Shield Link on Pin 10

· P28 Carries bolometer signals 13-24 and SLW Ground on Pin 10

· Good flat layup for cryoharness

· The whole harness bundle is overlain with an RF screen Indicated by: ——— which is connected to EMC backshells at the DCU amd wall of the CVV.

· SLW grounds of P27 and P28 are commoned at the 128-way connector

· No harness bundle overall insulation baselined. May be added later by locally wrapping with insulation at contact points.

· Harness connector is a Socket. Drawing indicates pin allocation as seen from the rear, non-engaging face of the connector.

Two Spectrometer Bias tails thus:

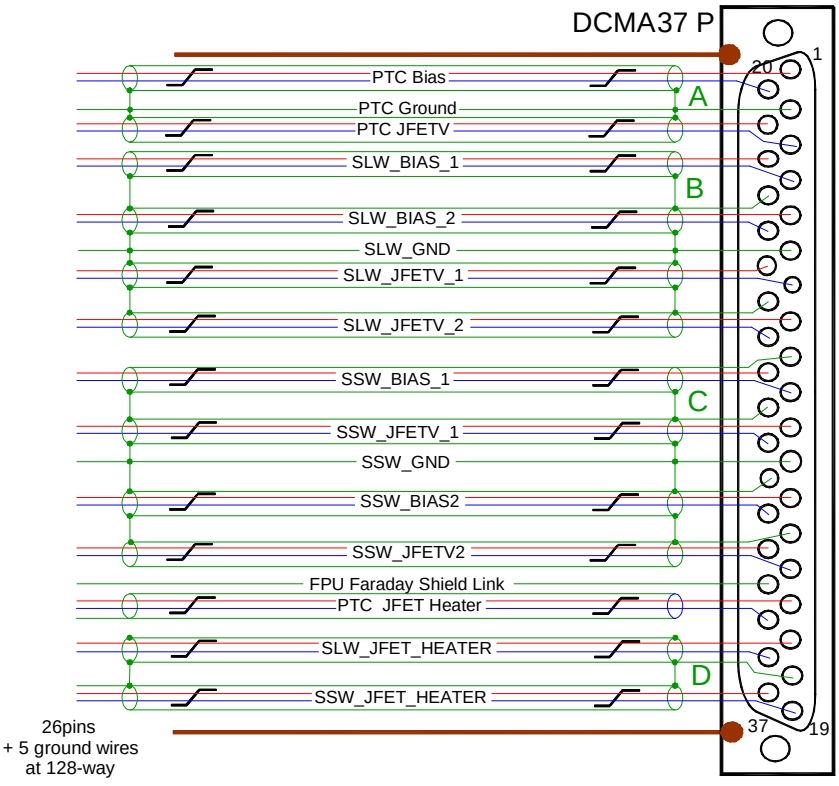

Type 3 Bias Tails (DCU P31/P32)

· 13 Insulated STPs
· 4 Single insulated ground wires
· Note SLW and SSW Ground Separation

· The whole harness bundle is overlain with an RF screen Indicated by: ——— which is connected to EMC backshells at the WE and the SVM-CB

· No harness bundle overall insulation baselined. May be added later by locally wrapping with insulation at contact points.

· A, B, C and D represent the commoning of ground references within the connectors which pass through the 128-way SVM-CB connector on single individual pins. The four prime and reduandant ground planes are not commoned at the 128-Way connector.

· The shield of the PTC JFET Heater is connected to the PTC Ground at the 128-Way

SVM-CB S1 128-Way Pin Allocations
(View of wiring side of connector)

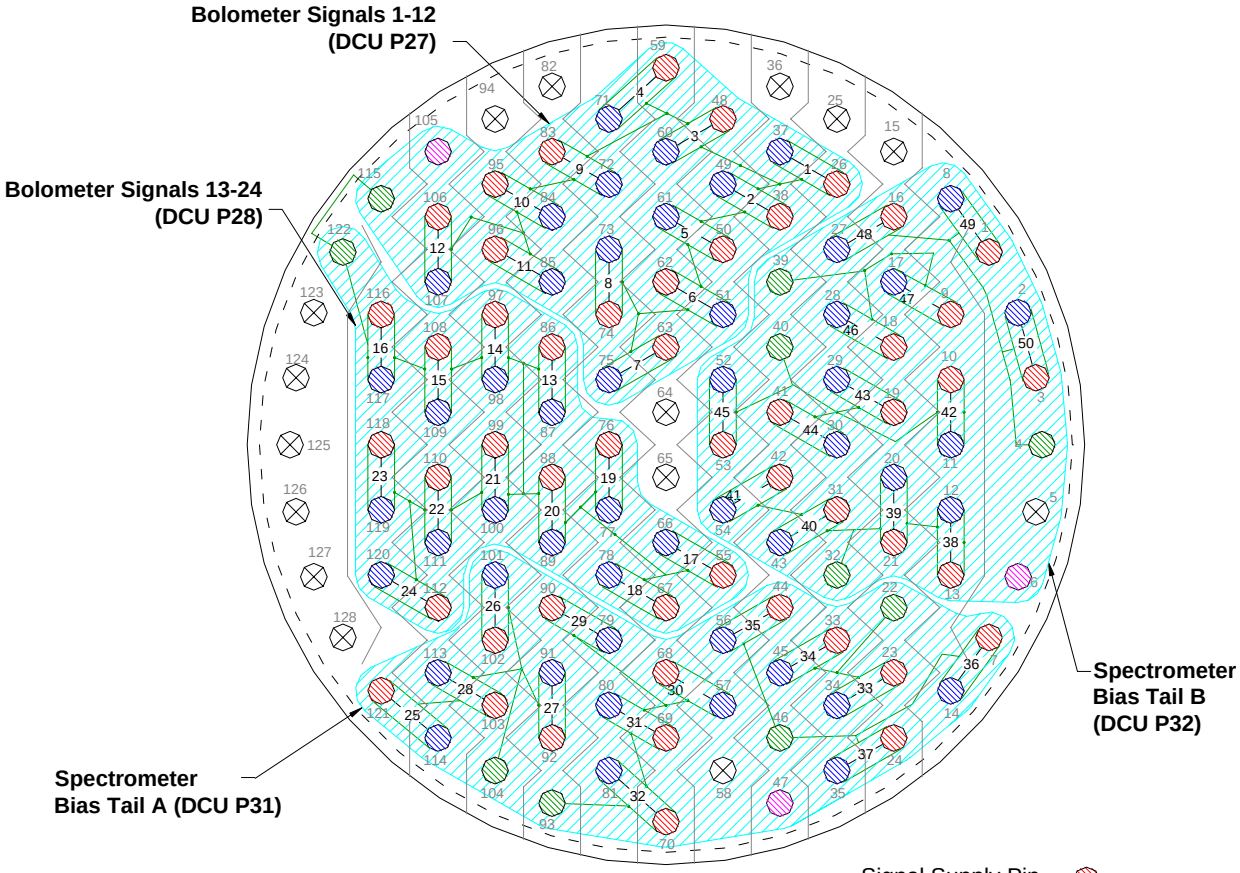

Signal Supply Pin
Signal Return Pin
Signal Ground Pin
FPU Faraday Shield Link Pin
No Connection
Harness Tails
Harness Overshield (Joined to connector chassis)
Signal Ground Connection

Shields of STP are commoned as indicated by signal ground connections and passed through the 128-way on dedicated ground pins.

112 Contacts used out of 128

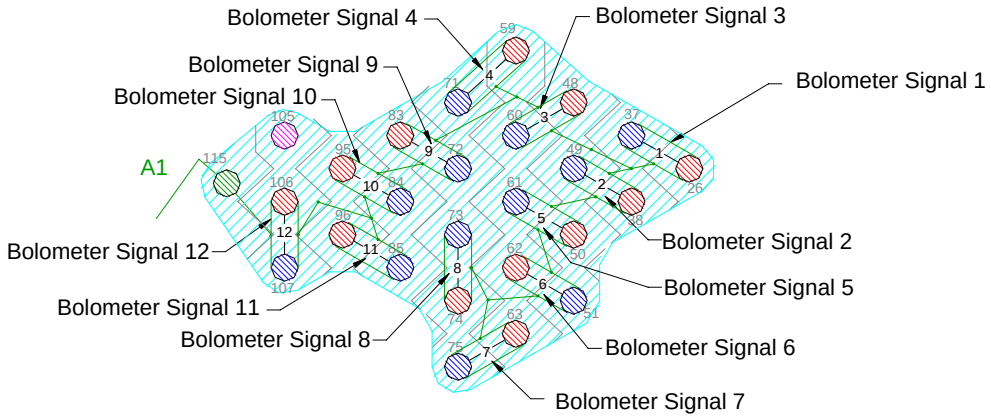

Bolometer Signals 1-12
(DCU P27)

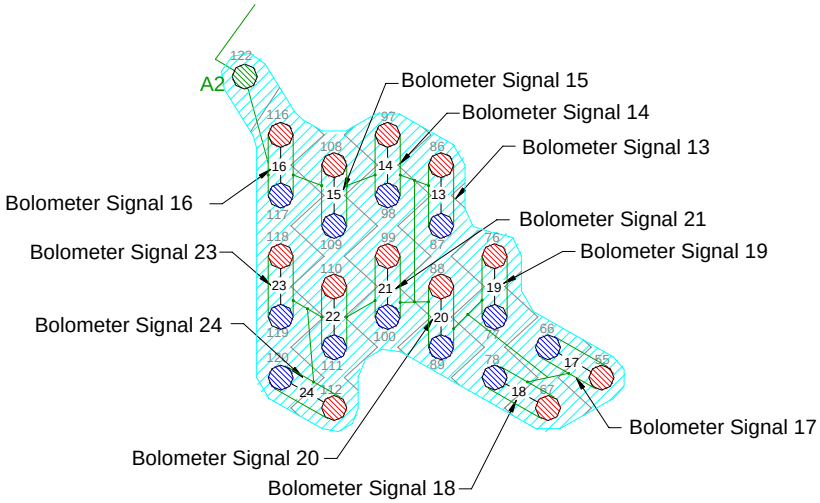

Bolometer Signals 13-24
(DCU P28)

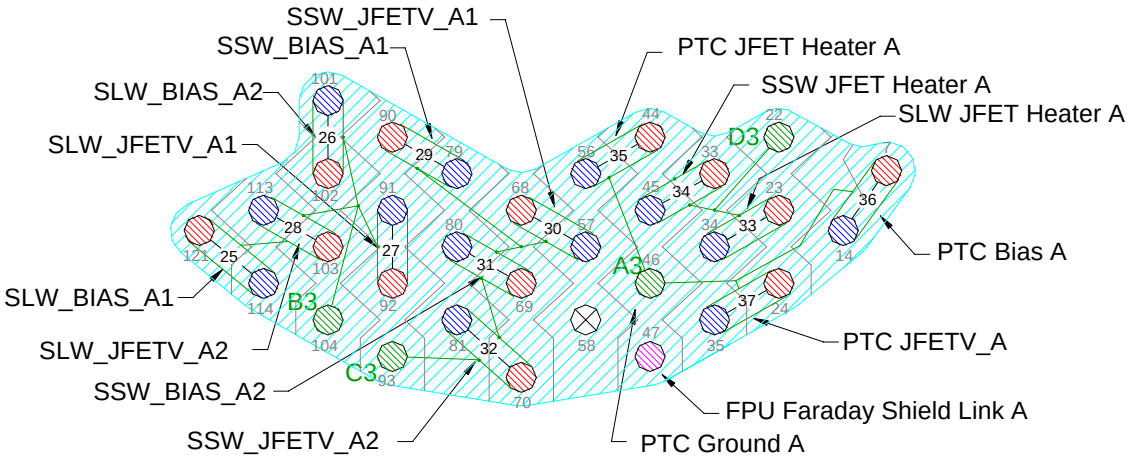

Spectrometer Bias Tail A
(DCU P31)

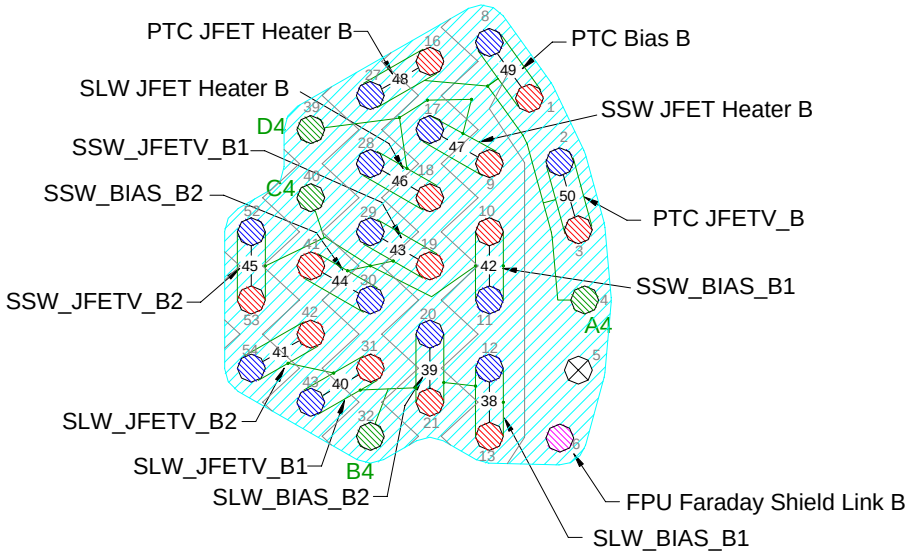

Spectrometer Bias Tail B
(DCU P32)

Contact Details

Notes:

1. Pin numbers on the 128-way suffixed by a letter in parentheses indicate the commoning of several ground reference wires or shields within the connector to a single pin on the 128-way CVV connector or the 37-way DCU connector.
2. Ground pins 115 and 122 are commoned within the connector.

Name	Function	128-way #1	37-way A (P27) Bol. Sig. 1-12	37-way B (P28) Bol. Sig. 13-24	37-way C (P31) S. Bias Tail A	37-way D (P32) S. Bias Tail B
Channel 1 +		26	20			
Channel 1 -		37	2			
Channel 1gnd shld		115 (A1)	1			
Channel 2 +		38	3			
Channel 2 -		49	22			
Channel 2gnd shld		115 (A1)	21			
Channel 3 +		48	23			
Channel 3 -		60	5			
Channel 3gnd shld		115 (A1)	4			
Channel 4 +		59	6			
Channel 4 -		71	25			
Channel 4gnd shld		115 (A1)	24			
Channel 5 +		50	26			
Channel 5 -		61	8			
Channel 5gnd shld		115 (A1)	7			
Channel 6 +		62	9			
Channel 6 -		51	28			
Channel 6gnd shld		115 (A1)	27			
FPU Faraday Shield Link		105 (A1)	10			
Channel 7 +		63	11			
Channel 7 -		75	29			
Channel 7gnd shld		115 (A1)	30			
Channel 8 +		74	31			
Channel 8 -		73	12			
Channel 8gnd shld		115 (A1)	13			
Channel 9 +		83	14			
Channel 9 -		72	32			
Channel 9gnd shld		115 (A1)	33			
Channel 10 +		95	34			
Channel 10 -		84	15			
Channel 10gnd shld		115 (A1)	16			
Channel 11 +		96	17			
Channel 11 -		85	35			
Channel 11gnd shld		115 (A1)	36			
Channel 12 +		106	37			
Channel 12 -		107	18			
Channel 12gnd shld		115 (A1)	19			

Name	Function	128-way #1	37-way A (P27) Bol. Sig. 1-12	37-way B (P28) Bol. Sig. 13-24	37-way C (P31) S. Bias Tail A	37-way D (P32) S. Bias Tail B
Channel 13 +		86		20		
Channel 13 -		87		2		
Channel 13gnd shld		122 (A2)		1		
Channel 14 +		97		3		
Channel 14 -		98		22		
Channel 14gnd shld		122 (A2)		21		
Channel 15 +		108		23		
Channel 15 -		109		5		
Channel 15gnd shld		122 (A2)		4		
Channel 16 +		116		6		
Channel 16 -		117		25		
Channel 16gnd shld		122 (A2)		24		
Channel 17 +		55		26		
Channel 17 -		66		8		
Channel 17gnd shld		122 (A2)		7		
Channel 18 +		67		9		
Channel 18 -		78		28		
Channel 18gnd shld		122 (A2)		27		
SLW GND WIRE		122 (A2)		10		
Channel 19 +		76		11		
Channel 19 -		77		29		
Channel 19gnd shld		122 (A2)		30		
Channel 20 +		88		31		
Channel 20 -		89		12		
Channel 20gnd shld		122 (A2)		13		
Channel 21 +		99		14		
Channel 21 -		100		32		
Channel 21gnd shld		122 (A2)		33		
Channel 22 +		110		34		
Channel 22 -		111		15		
Channel 22gnd shld		122 (A2)		16		
Channel 23 +		118		17		
Channel 23 -		119		35		
Channel 23gnd shld		122 (A2)		36		
Channel 24 +		112		37		
Channel 24 -		120		18		
Channel 24gnd shld		122 (A2)		19		
PTC Bias_A +ve	PBias_TC	7			1	
PTC Bias_A –ve	Nbias_TC	14			20	
PTC Bias_A Shield	Gnd_Bias_Ph	46 (A3)			2 (A)	
PTC Ground_A	Gnd_Bias_Ph	46 (A3)			2 (A)	
PTC JFETV Bias_A +ve	Vss_TC	24			21	
PTC JFETV Bias_A -ve	Vdd_TC	35			3	

Name	Function	128-way #1	37-way A (P27) Bol. Sig. 1-12	37-way B (P28) Bol. Sig. 13-24	37-way C (P31) S. Bias Tail A	37-way D (P32) S. Bias Tail B
PTC JFETV Bias_A Shield	Gnd_Bias_Ph	46 (A3)			2 (A)	
SLW_BIAS_A1+ve		121			22	
SLW_BIAS_A1-ve		114			4	
SLW_BIAS_A1 shld		104 (B3)			6 (B)	
SLW_BIAS_A2 +ve		102			5	
SLW_BIAS_A2 -ve		101			24	
SLW_BIAS_A2 shld		104 (B3)			23 (B)	
SLW GND WIRE_A		104 (B3)			6 (B)	
SLW_JFETV_A1 +ve		92			25	
SLW_JFETV_A1 -ve		91			7	
SLW_JFETV_A1 shld		104 (B3)			6 (B)	
SLW_JFETV_A2 +ve		103			8	
SLW_JFETV_A2 -ve		113			27	
SLW_JFETV_A2 shld		104 (B3)			6 (B)	
FPU Faraday Shield Link_A		47			34	
SSW_BIAS1_A +ve		90			28	
SSW_BIAS1_A –ve		79			10	
SSW_BIAS1_A shld		93 (C3)			9 (C)	
SSW_JFETV1_A +ve		68			11	
SSW_JFETV1_A -ve		57			30	
SSW_JFETV1_A shld		93 (C3)			29 (C)	
SSW GND WIRE_A		93 (C3)			12 (C)	
SSW_BIAS2_A +ve		69			13	
SSW_BIAS2_A –ve		80			32	
SSW_BIAS2_A shld		93 (C3)			31 (C)	
SSW_JFETV2_A +ve		70			33	
SSW_JFETV2_A -ve		81			15	
SSW_JFETV2_A shld		93 (C3)			14 (C)	
S_HEATER GROUND PIN_A		22 (D3)			NC	
SLW_JFET_HEATER_A +ve		23			17	
SLW_JFET_HEATER_A -ve		34			36	
SLW_JFET_HEATER_A shld		22 (D3)			18 (D)	
SSW_JFET_HEATER_A +ve		33			37	
SSW_JFET_HEATER_A -ve		45			19	
SSW_JFET_HEATER_A shld		22 (D3)			18 (D)	
PTC JFET HEATER_A +ve		44			16	
PTC JFET HEATER_A -ve		56			35	
PTC JFET HEATER_A shld		46 (A3)			NC	
PTC Bias_B +ve		1				1
PTC Bias_B –ve		8				20
PTC Bias_B Shield		4 (A4)				2 (A)
PTC Ground_B		4 (A4)				2 (A)
PTC JFETV Bias_B +ve		3				21
PTC JFETV Bias_B –ve		2				3

Name	Function	128-way #1	37-way A (P27) Bol. Sig. 1-12	37-way B (P28) Bol. Sig. 13-24	37-way C (P31) S. Bias Tail A	37-way D (P32) S. Bias Tail B
PTC JFETV Bias_B Shield		4 (A4)				2 (A)
SLW_BIAS_B1+ve		13				22
SLW_BIAS_B1-ve		12				4
SLW_BIAS_B1 shld		32 (B4)				6 (B)
SLW_BIAS_B2 +ve		21				5
SLW_BIAS_B2 –ve		20				24
SLW_BIAS_B2 shld		32 (B4)				23 (B)
SLW_JFETV_B1 +ve		31				25
SLW_JFETV_B1 –ve		43				7
SLW_JFETV_B1 shld		32 (B4)				6 (B)
SLW_JFETV_B2 +ve		42				8
SLW_JFETV_B2 –ve		54				27
SLW_JFETV_B2 shld		32 (B4)				6 (B)
SLW GND WIRE_B		32 (B4)				6 (B)
FPU Faraday Shield Link_B		6				34
SSW GND WIRE_B		40 (C4)				12 (C)
SSW_BIAS1_B +ve		10				28
SSW_BIAS1_B –ve		11				10
SSW_BIAS1_B shld		40 (C4)				9 (C)
SSW_JFETV1_B +ve		19				11
SSW_JFETV1_B -ve		29				30
SSW_JFETV1_B shld		40 (C4)				29 (C)
SSW_BIAS2_B +ve		41				13
SSW_BIAS2_B –ve		30				32
SSW_BIAS2_B shld		40 (C4)				31 (C)
SSW_JFETV2_B +ve		53				33
SSW_JFETV2_B -ve		52				15
SSW_JFETV2_B shld		40 (C4)				14 (C)
S_HEATER GROUND PIN B		39 (D4)				NC
SLW_HEATER_B +ve		18				17
SLW_HEATER_B -ve		28				36
SLW_HEATER_B shld		39 (D4)				18 (D)
SSW_HEATER_B +ve		9				37
SSW_HEATER_B -ve		17				19
SSW_HEATER_B shld		39 (D4)				18 (D)
PTC JFET_HEATER_A +ve		16				16
PTC JFET_HEATER_A -ve		27				35
PTC JFET_HEATER_A shld		4 (A4)				NC
Harness Overshield		EMC Backshell	EMC Backshell	EMC Backshell	EMC Backshell	EMC Backshell

4.2.2 S2 SVM-CB 2 – DRCU (Type 4) SSW and PTC

Overall Mechanical Drawing

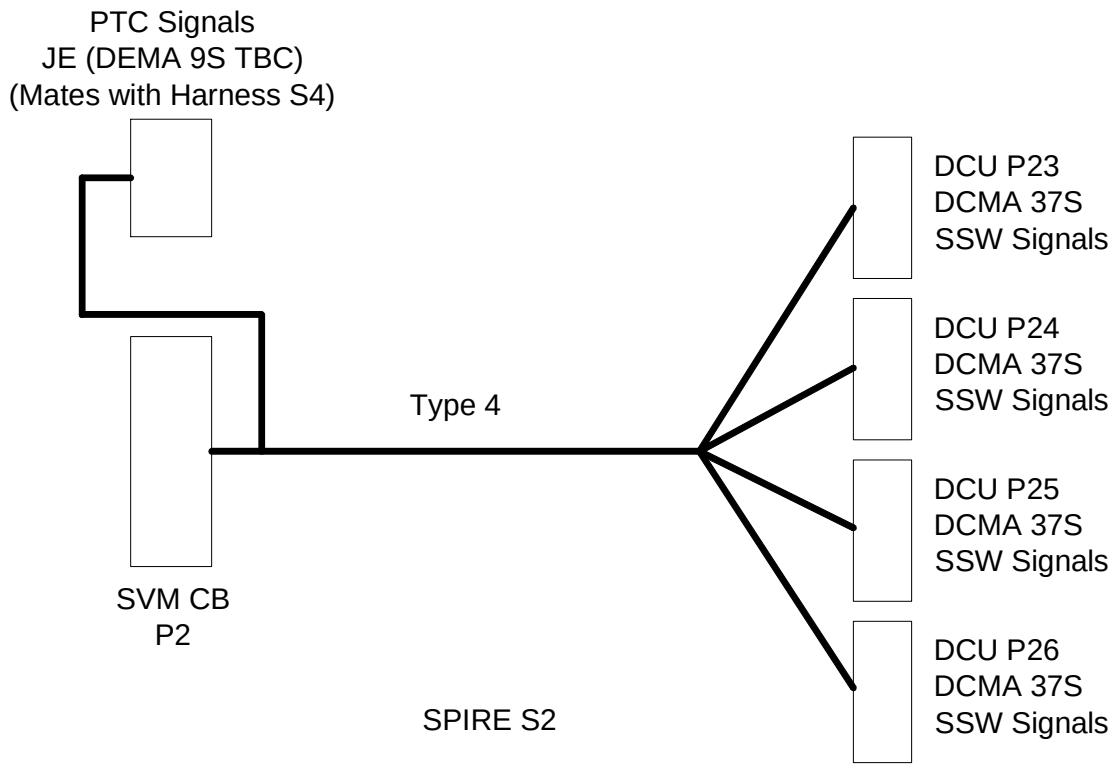

Refer to Annex 7 for details of how the S2 and the S4 harnesses readout the PTC Signals within the photometer LIAs.

Connector/Backshell Details

DCMA	37	S	+	Glenair	557-E-359-M-4	to	DCU J23	DCU-JFS	(End Entry Backshell)
DCMA	37	S	+	Glenair	557-B-357-M-4	to	DCU J24	DCU-JFS	(45° entry Backshell)
DCMA	37	S	+	Glenair	557-E-359-M-4	to	DCU J25	DCU-JFS	(End Entry Backshell)
DCMA	37	S	+	Glenair	557-B-357-M-4	to	DCU J26	DCU-JFS	(45° entry Backshell)
DEMA	9	S	+	Glenair	557-?- ? M-1	to	S4 PE	J2-J4	(Top entry backshell?)

Harness Layup DCU P23/P25

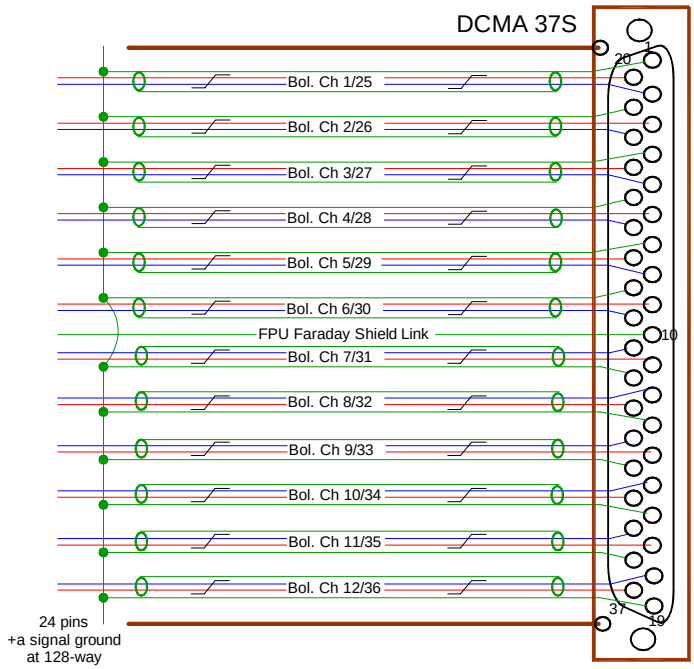

12 Channel Bolometer SSW Tails (DCU P23/P25)

· 12 Insulated STPs
· 1 Insulated Single Wire

· P23 Carries bolometer signals 1-12
· P25 Carries bolometer signals 25-36

· Good flat layup for cryoharness

· The whole harness bundle is overlain with an RF screen Indicated by: ——— which is connected to EMC backshells at the DCU and the SVM-CB

· FPU Faraday Shield Link Wires of P23 and P25 are commoned at the 128-way connector

· No harness bundle overall insulation baselined. May be added later by locally wrapping with insulating tape at contact points.

· Harness connector is a Socket. Drawing indicates pin allocation as seen from the rear, non-engaging face of the connector.

Harness Layup

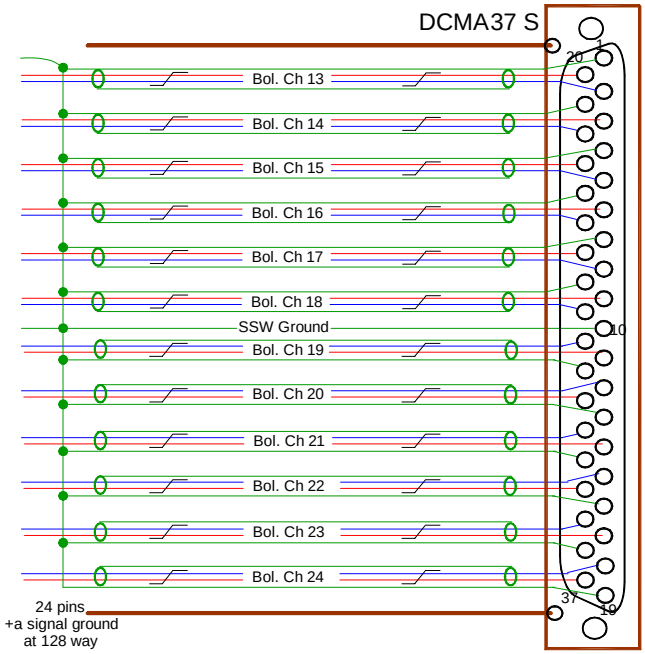

12 Channel Bolometer SSW Tails (DCU P24)

· 12 Insulated STPs
· 1 Insulated Single Wire

· Good flat layup for cryoharness

· The whole harness bundle is overlain with an RF screen Indicated by: ——— which is connected to EMC backshells at the DCU and the SVM-CB

· SSW Grounds of P24 and P26 are commoned at the 128-way connector

· No harness bundle overall insulation baselined. May be added later by locally wrapping with insulating tape at contact points.

· Harness connector is a Socket. Drawing indicates pin allocation as seen from the rear, non-engaging face of the connector.

Harness Layup (cont.)

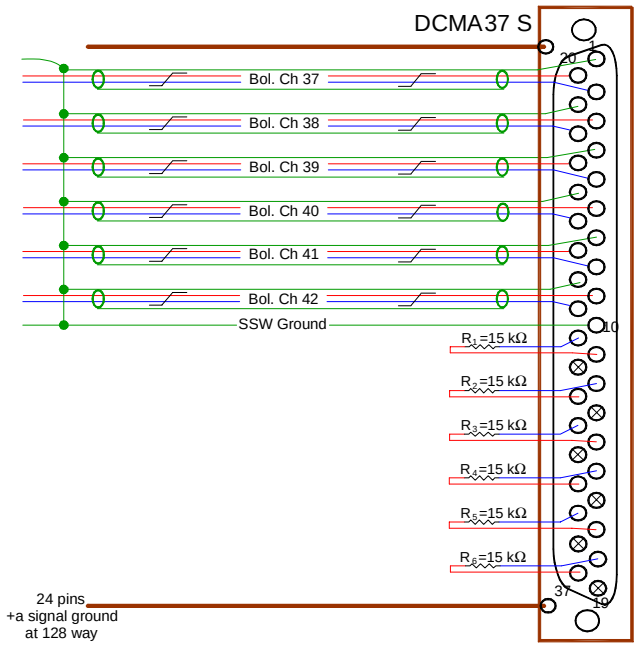

12 Channel Bolometer SSW Tail DCU P26

· 6 Insulated STPs
· 1 Insulated Single Wire

· P26 Carries bolometer signals 37-42

· Good flat layup for cryoharness

· The whole harness bundle is overlain with an RF screen Indicated by: ——— which is connected to EMC backshells at the DCU and the SVM-CB

· SSW Ground Wires of P24 and P26 are commoned at the 128-way connector

· No harness bundle overall insulation baselined. May be added later by locally wrapping with insulating tape at contact points.

· Harness connector is a Socket. Drawing indicates pin allocation as seen from the rear, non-engaging face of the connector.

· 15kΩ Resistors to short out channels 43-48

PTC Signals JE: (TBD)

SVM-CB S2 128-Way Pin Allocation (View of wiring side of connector)

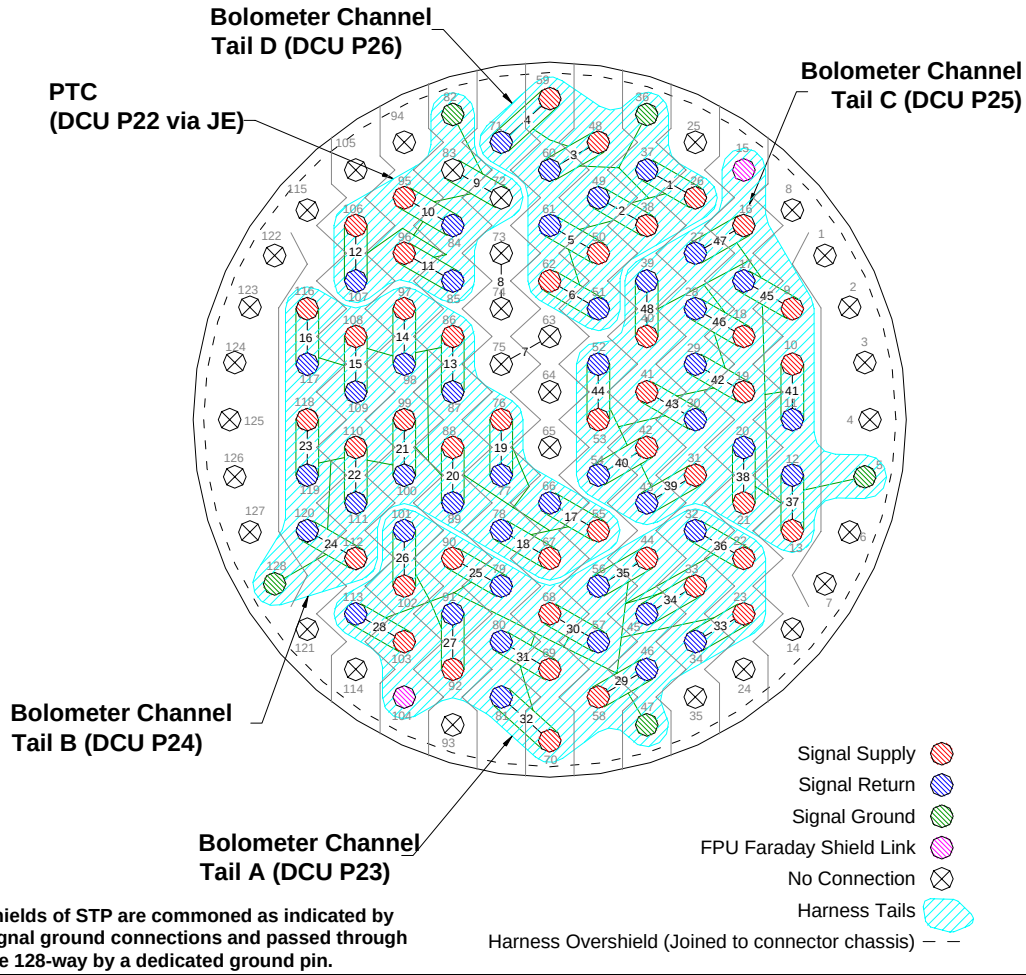

Shields of STP are commoned as indicated by signal ground connections and passed through the 128-way by a dedicated ground pin.

SVM-CB S2 128-Way Pin Allocation (cont.)

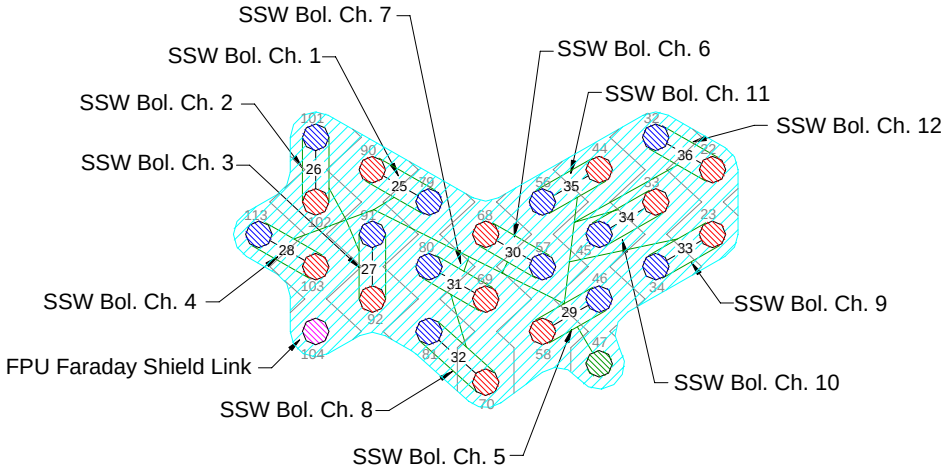

Bolometer Channel Tail A (DCU P23)

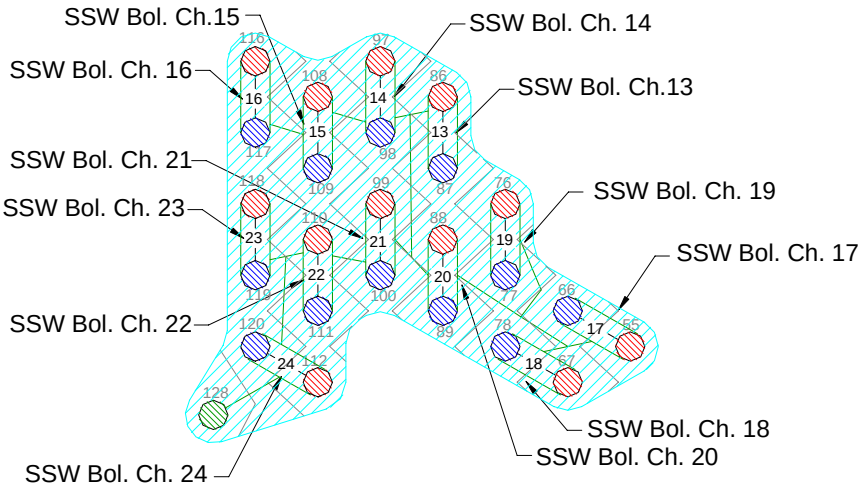

Bolometer Channel Tail B (DCU P24)

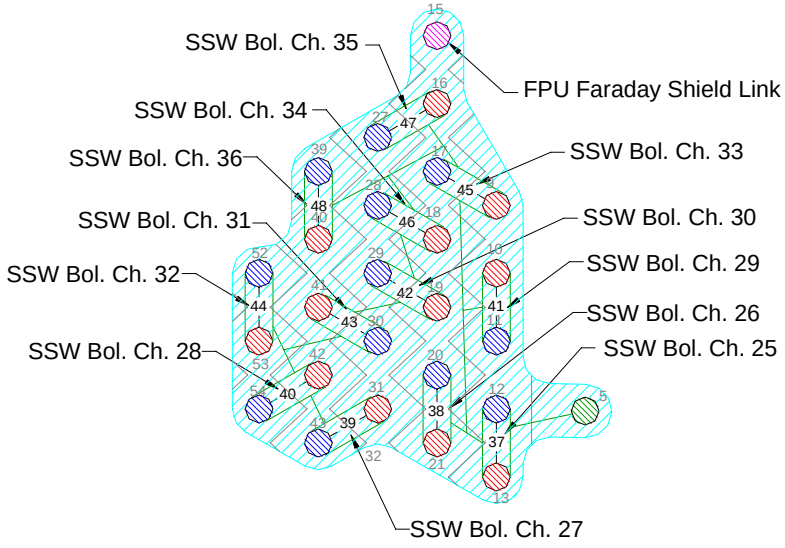

Bolometer Channel Tail C (DCU P25)

SVM-CB S2 128-Way Pin Allocation (cont.)

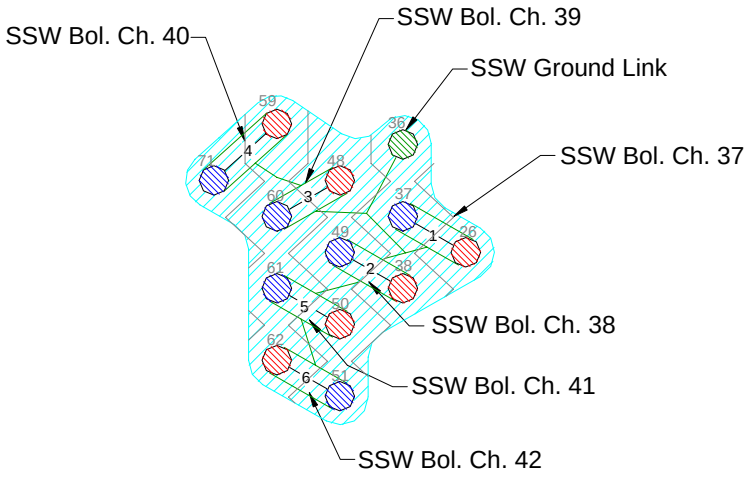

Bolometer Channel Tail D (DCU P26)

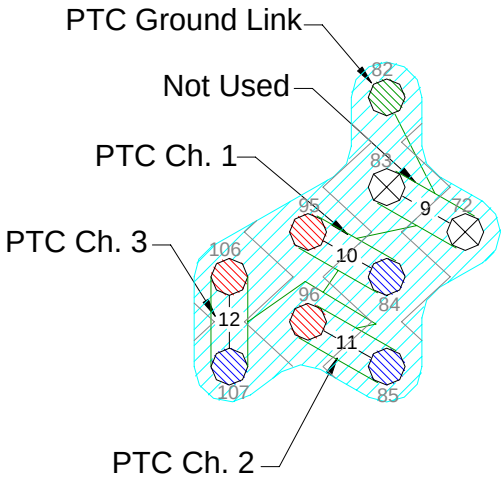

PTC
DCU P22 via JE

Contact Details

Notes: A. Pin numbers on the 128-way suffixed by a letter in parentheses indicate the commoning of several ground reference wires or shields within the connector to a single pin on the 128-way CVV connector or the 37-way DCU connector.

B. Pin numbers for connector JE assume the use of a DEMA 9 connector. This connector type is TBD

C. Refer to Annex 7 - PTC Cryoharnessing that indicates graphically the means by which these signals are wired.

Name	128Way #2	37-Way DCU P23	37-Way DCU P24	37-Way DCU P25	37-Way DCU P26	SVM-CB JE (I/F S2/S4)
Channel 1 +	90	20				
Channel 1 -	79	2				
Channel 1gnd shld	47 (C)	1				
Channel 2 +	102	3				
Channel 2 -	101	22				
Channel 2gnd shld	47 (C)	21				
Channel 3 +	92	23				
Channel 3 -	91	5				
Channel 3gnd shld	47 (C)	4				
Channel 4 +	103	6				
Channel 4 -	113	25				
Channel 4gnd shld	47 (C)	24				
Channel 5 +	58	26				
Channel 5 -	46	8				
Channel 5gnd shld	47 (C)	7				
Channel 6 +	68	9				
Channel 6 -	57	28				
Channel 6gnd shld	47 (C)	27				
FPU Faraday Shield Link	104	10				
Channel 7 +	69	11				
Channel 7 -	80	29				
Channel 7gnd shld	47 (C)	30				
Channel 8 +	70	31				
Channel 8 -	81	12				
Channel 8gnd shld	47 (C)	13				
Channel 9 +	23	14				
Channel 9 -	34	32				
Channel 9gnd shld	47 (C)	33				
Channel 10 +	33	34				
Channel 10 -	45	15				
Channel 10gnd shld	47 (C)	16				
Channel 11 +	44	17				
Channel 11 -	56	35				
Channel 11gnd shld	47 (C)	36				
Channel 12 +	22	37				
Channel 12 -	32	18				
Channel 12gnd shld	47 (C)	19				
Channel 13 +	86		20			
Channel 13 -	87		2			
Channel 13 gnd shld	128 (B)		1			
Channel 14 +	97		3			
Channel 14 -	98		22			
Channel 14 gnd shld	128 (B)		21			
Channel 15 +	108		23			
Channel 15 -	109		5			
Channel 15gnd shld	128 (B)		4			
Channel 16 +	116		6			
Channel 16 -	117		25			
Channel 16gnd shld	128 (B)		24			
Channel 17 +	55		26			
Channel 17 -	66		8			
Channel 17gnd shld	128 (B)		7			
Channel 18 +	67		9			

Name	128Way #2	37-Way DCU P23	37-Way DCU P24	37-Way DCU P25	37-Way DCU P26	SVM-CB JE (I/F S2/S4)
Channel 18 -	78		28			
Channel 18gnd shld	128 (B)		27			
GND WIRE	128 (B)		10			
Channel 19 +	76		11			
Channel 19 -	77		29			
Channel 19gnd shld	128 (B)		30			
Channel 20 +	88		31			
Channel 20 -	89		12			
Channel 20 gnd shld	128 (B)		13			
Channel 21 +	99		14			
Channel 21 -	100		32			
Channel 21gnd shld	128 (B)		33			
Channel 22 +	110		34			
Channel 22 -	111		15			
Channel 22gnd shld	128 (B)		16			
Channel 23 +	118		17			
Channel 23 -	119		35			
Channel 23gnd shld	128 (B)		36			
Channel 24 +	112		37			
Channel 24 -	120		18			
Channel 24gnd shld	128 (B)		19			
Channel 25 +	13			20		
Channel 25 -	12			2		
Channel 25gnd shld	5 (D)			1		
Channel 26 +	21			3		
Channel 26 -	20			22		
Channel 26gnd shld	5 (D)			21		
Channel 27 +	31			23		
Channel 27 -	43			5		
Channel 27gnd shld	5 (D)			4		
Channel 28 +	42			6		
Channel 28 -	54			25		
Channel 28gnd shld	5 (D)			24		
Channel 29 +	10			26		
Channel 29 -	11			8		
Channel 29gnd shld	5 (D)			7		
Channel 30 +	19			9		
Channel 30 -	29			28		
Channel 30 gnd shld	5 (D)			27		
FPU Faraday Shield Link	15			10		
Channel 31 +	41			11		
Channel 31 -	30			29		
Channel 31gnd shld	5 (D)			30		
Channel 32 +	53			31		
Channel 32 -	52			12		
Channel 32gnd shld	5 (D)			13		
Channel 33 +	9			14		
Channel 33 -	17			32		
Channel 33gnd shld	5 (D)			33		
Channel 34 +	18			34		
Channel 34 -	28			15		
Channel 34gnd shld	5 (D)			16		
Channel 35 +	16			17		
Channel 35 -	27			35		
Channel 35gnd shld	5 (D)			36		
Channel 36 +	40			37		
Channel 36 -	39			18		
Channel 36gnd shld	5 (D)			19		
Channel 37 +	26				20	
Channel 37 -	37				2	
Channel 37gnd shld	36 (A)				1	
Channel 38 +	38				3	
Channel 38 -	49				22	
Channel 38gnd shld	36 (A)				21	

Name	128Way #2	37-Way DCU P23	37-Way DCU P24	37-Way DCU P25	37-Way DCU P26	SVM-CB JE (I/F S2/S4)
Channel 39 +	48				23	
Channel 39 -	60				5	
Channel 39gnd shld	36 (A)				4	
Channel 40 +	59				6	
Channel 40 -	71				25	
Channel 40gnd shld	36 (A)				24	
Channel 41 +	50				26	
Channel 41 -	61				8	
Channel 41gnd shld	36 (A)				7	
Channel 42 +	62				9	
Channel 42 -	51				28	
Channel 42gnd shld	36 (A)				27	
GND WIRE	36 (A)				10	
Channel 43 + (spare)	NC				11 to 29 via R_1=15kΩ	
Channel 43 - (spare)	NC				29	
Channel 43 gnd shld (spare)	NC				30 (N.C.)	
Channel 44 + (spare)	NC				31 to 12 via R_2=15kΩ	
Channel 44 - (spare)	NC				12	
Channel 44 gnd shld (spare)	NC				13 (N.C.)	
Channel 45 + (spare)	NC				14 to 32 via R_3=15kΩ	
Channel 45 - (spare)	NC				32	
Channel 45 gnd shld (spare)	NC				33 (N.C.)	
Channel 46 + (spare)	NC				34 to 15 via R_4=15kΩ	
Channel 46 - (spare)	NC				15	
Channel 46 gnd shld (spare)	NC				16 (N.C.)	
Channel 47 + (spare)	NC				17 to 35 via R_5=15kΩ	
Channel 47 - (spare)	NC				35	
Channel 47 gnd shld (spare)	NC				36 (N.C.)	
Channel 48 + (spare)	NC				37 to 18 via R_6=15kΩ	
Channel 48 - (spare)	NC				18	
Channel 48 gnd shld (spare)	NC				19 (N.C.)	
PTC Ch 1 +	95					1 (TBC – See Note B)
PTC Ch 1 -	84					6 (TBC)
PTC Gnd	82 (A)					2 (TBC)
PTC Ch 2 +	96					3 (TBC)
PTC Ch 2 -	85					7 (TBC)
PTC Gnd	82 (A)					8 (TBC)
PTC Ch 3 +	106					4 (TBC)
PTC Ch 3 -	107					5 (TBC)
PTC Gnd	82 (A)					9 (TBC)
Harness Overshield	EMC Backshell	EMC Backshell	EMC Backshell	EMC Backshell	EMC Backshell	EMC Backshell

4.2.3 S3 SVM-CB 3 – DRCU (Type 2) Photometer Biases

Overall Mechanical Drawing

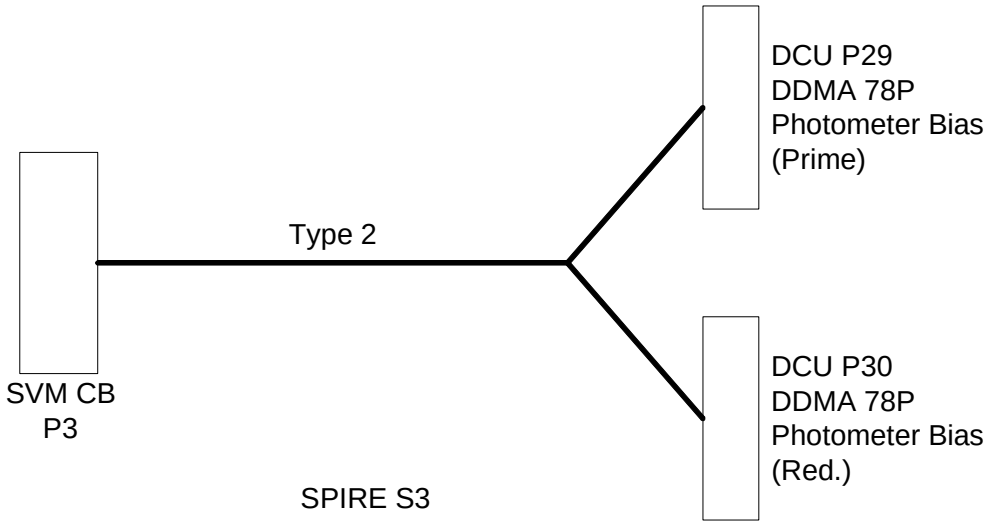

Connector/Backshell Details

DDMA 78 P +	Glenair	557 - E - 359 - M - 5 -	TBD	to	DCU J29	Phot Bias (Prime)
DDMA 78 P +	Glenair	557 - E - 359 - M - 5 -	TBD	to	DCU J30	Phot Bias (Red.)

Harness Layup

Type 2 Bias Tails (DCU P29/P30)

· 25 Insulated STPs
· 4 Single insulated ground wires
· Note PSW, PMW and PLW Ground Separation

· The whole harness bundle is overlain with an RF screen connected to EMC backshells at the DCU and the SVM-CB.

· No harness bundle overall insulation baselined. May be added later by locally wrapping with insulation at contact points.

· A, B, C, D, E and F represent the commoning of ground references within the connectors which pass through the 128-way CVV connector on single individual pins.

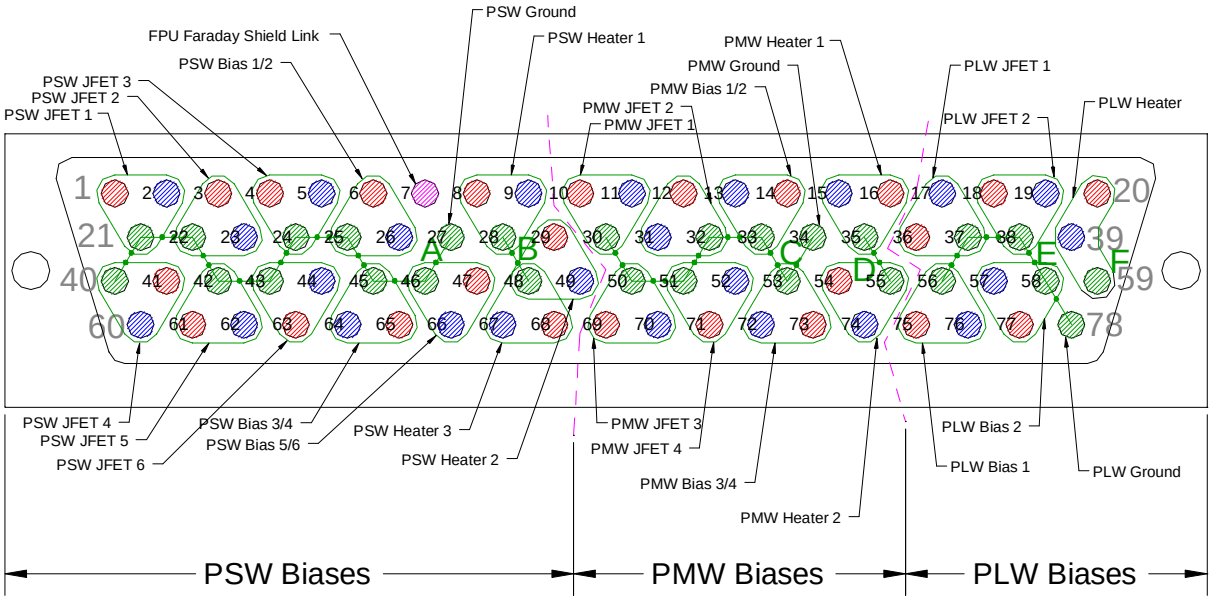

SVM-CB S3 128-Way Pin Allocations (View of wiring side of connector)

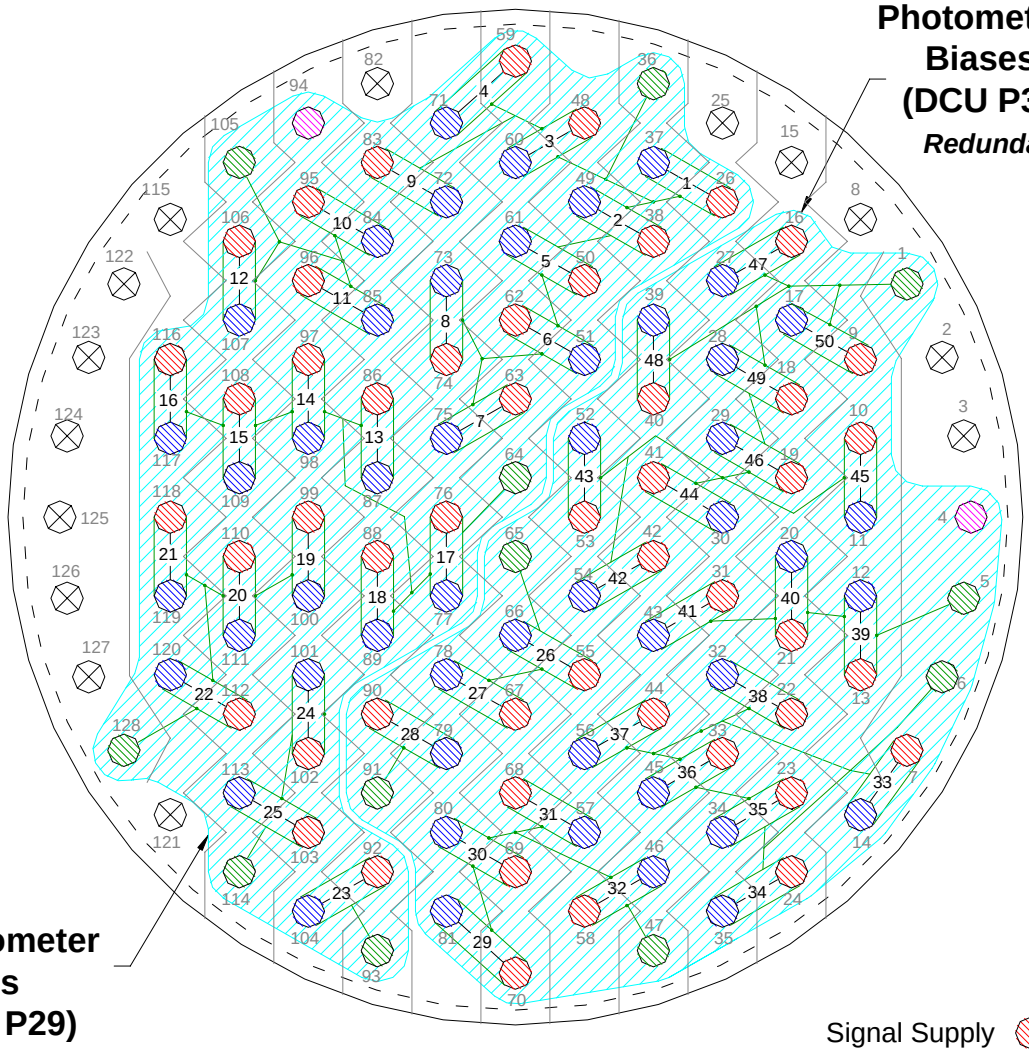

Shields of STP are commoned as indicated by signal ground connections and passed through the 128-way by a dedicated ground pin.

112 out of 128 Contacts used

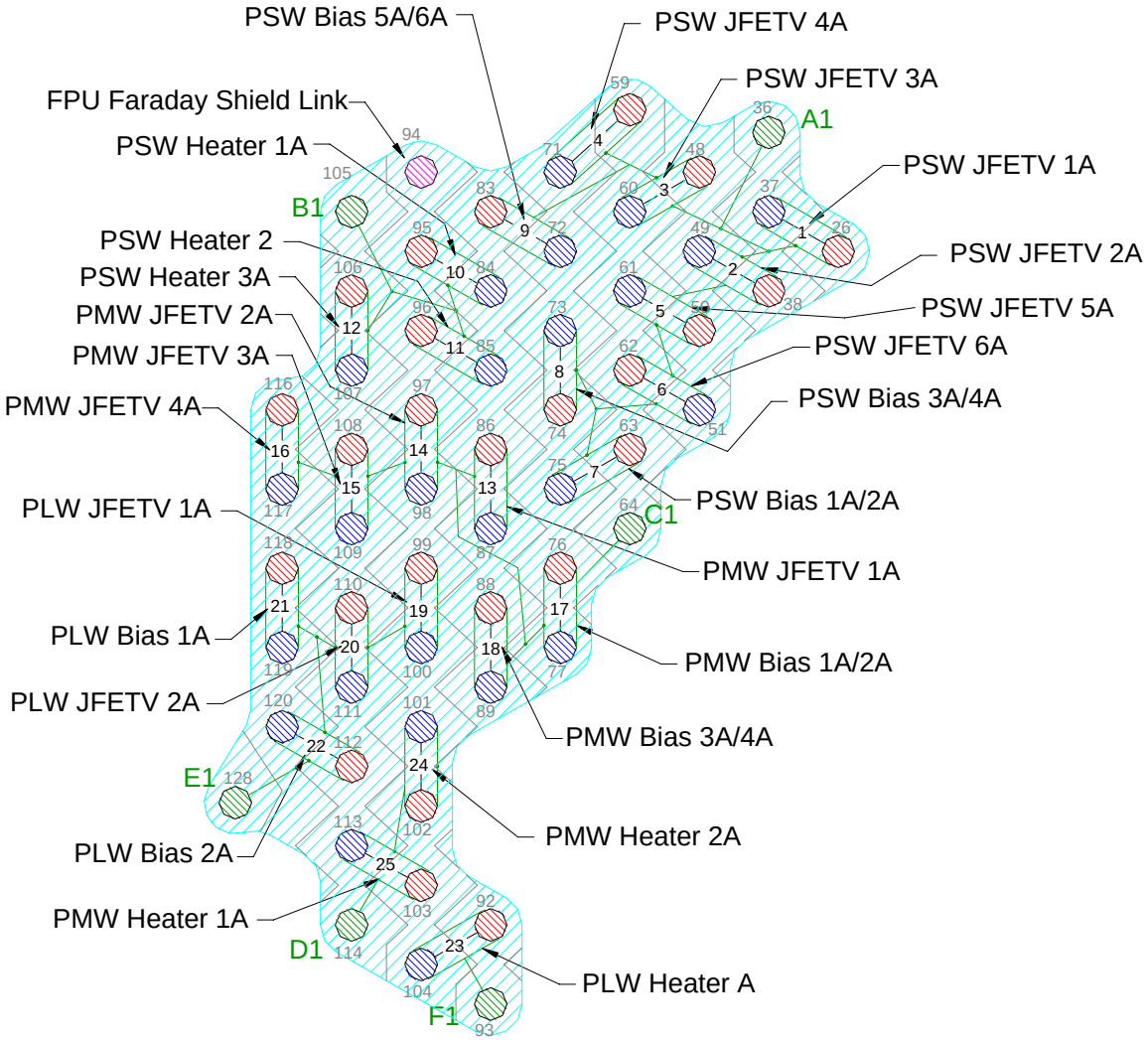

Photometer Biases A (DCU P29)
Prime

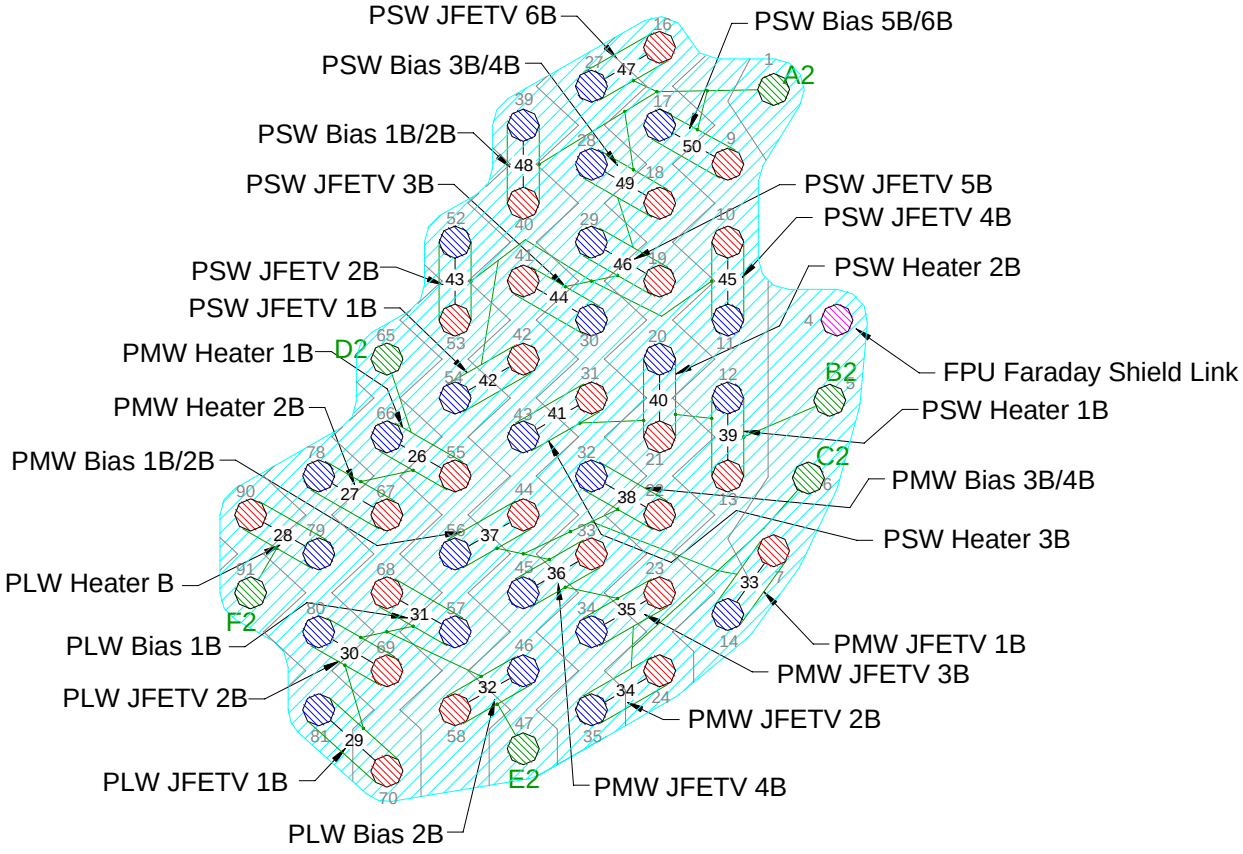

Photometer Biases B (DCU P30)
Redundant

Contact Details

Notes: Pin numbers on the 128-way suffixed by a letter in parentheses indicate the commoning of several ground reference wires or shields within the connector to a single pin on the 128-way CVV connector or the 37-way DCU connector.

Description	Signal Name	128-Way #3	78-way Photometer Biases (J29)	78-way Photometer Biases (J30)
PSW_JFETV1_A +	Vdd1_P	26	1	
PSW_JFETV1_A -	Vss1_P	37	2	
PSW_JFETV1_A shld	Gnd_Bias_Ph	36 (A1)	21 (A1)	
PSW_JFETV2_A +	Vdd2_P	38	3	
PSW_JFETV2_A -	Vss2_P	49	23	
PSW_JFETV2_A shld	Gnd_Bias_Ph	36 (A1)	22 (A1)	
PSW_JFETV3_A +	Vdd3_P	48	4	
PSW_JFETV3_A -	Vss3_P	60	5	
PSW_JFETV3_A shld	Gnd_Bias_Ph	36 (A1)	24 (A1)	
PSW_JFETV4_A +	Vdd4_P	59	41	
PSW_JFETV4_A -	Vss4_P	71	60	
PSW_JFETV4_A shld	Gnd_Bias_Ph	36 (A1)	40 (A1)	
PSW_JFETV5_A +	Vdd5_P	50	61	
PSW_JFETV5_A -	Vss5_P	61	62	
PSW_JFETV5_A shld	Gnd_Bias_Ph	36 (A1)	42 (A1)	
PSW_JFETV6_A +	Vdd6_P	62	63	
PSW_JFETV6_A -	Vss6_P	51	44	
PSW_JFETV6_A shld	Gnd_Bias_Ph	36 (A1)	43 (A1)	
PSW GRND_A	Gnd_Bias_Ph	36 (A1)	27 (A1)	
PSW_BIAS1/2_A +	PBias_P250	63	6	
PSW_BIAS1/2_A -	Nbias_250	75	26	
PSW_BIAS1/2_A shld	Gnd_Bias_Ph	36 (A1)	25 (A1)	
PSW_BIAS3/4_A +	Pbias_P250	74	65	
PSW_BIAS3/4_A -	Nbias_P250	73	64	
PSW_BIAS3/4_A shld	Gnd_Bias_Ph	36 (A1)	45 (A1)	
PSW_BIAS5/6_A +	Pbias_P250	83	47	
PSW_BIAS5/6_A -	Nbias_P250	72	66	
PSW_BIAS5/6_A shld	Gnd_Bias_Ph	36 (A1)	46 (A1)	
PSW_HEATER_A1 +	Pheater_PSW1	95	8	
PSW_HEATER_A1 -	Nheater_PSW1	84	9	
PSW_HEATER_A1 shld	Gnd_Bias_Ph	105 (B1)	28 (B1)	
PSW_HEATER_A2 +	Pheater_PSW2	96	29	
PSW_HEATER_A2 -	Nheater_PSW2	85	49	
PSW_HEATER_A2 shld	Gnd_Bias_Ph	105 (B1)	48 (B1)	
PSW_HEATER_A3 +	Pheater_PSW3	106	68	
PSW_HEATER_A3 -	Nheater_PSW3	107	67	
PSW_HEATER_A3 shld	Gnd_Bias_Ph	105 (B1)	48 (B1)	
FPU Faraday Shield Link	Gnd_Bias_Ph	94	7	
PMW_JFETV1_A +	Vdd7_P	86	10	
PMW_JFETV1_A -	Vss7_P	87	11	
PMW_JFETV1_A shld	Gnd_Bias_Ph	64 (C1)	30 (C1)	
PMW_JFETV2_A +	Vdd8_P	97	12	
PMW_JFETV2_A -	Vss8_P	98	31	
PMW_JFETV2_A shld	Gnd_Bias_Ph	64 (C1)	32 (C1)	
PMW_JFETV3_A +	Vdd9_P	108	69	
PMW_JFETV3_A -	Vss9_P	109	70	
PMW_JFETV3_A shld	Gnd_Bias_Ph	64 (C1)	50 (C1)	
PMW_JFETV4_A +	Vdd10_P	116	71	
PMW_JFETV4_A -	Vss10_P	117	52	
PMW_JFETV4_A shld	Gnd_Bias_Ph	64 (C1)	51 (C1)	
PMW_BIAS1/2_A +	PBias_P350	76	14	
PMW_BIAS1/2_A -	Nbias_P350	77	13	

Description	Signal Name	128-Way #3	78-way Photometer Biases (J29)	78-way Photometer Biases (J30)
PMW_BIAS1/2_A shld	Gnd_Bias_Ph	64 (C1)	33 (C1)	
PMW_BIAS3/4_A +	Pbias_P350	88	73	
PMW_BIAS3/4_A -	Nbias_P350	89	72	
PMW_BIAS3/4_A shld	Gnd_Bias_Ph	64 (C1)	53 (C1)	
PMW GND WIRE_A	Gnd_Bias_Ph	64 (C1)	34 (C1)	
PMW HEATER A1 +	Pheater_PMW1	103	16	
PMW HEATER A1 -	Nheater_PMW1	113	15	
PMW HEATER A1 shld	Gnd_Bias_Ph	114 (D1)	35 (D1)	
PMW HEATER A2 +	Pheater_PMW2	102	54	
PMW HEATER A2 -	Nheater_PMW2	101	74	
PMW HEATER A2 shld	Gnd_Bias_Ph	114 (D1)	55 (D1)	
PLW HEATER A +	Pheater_PLW1	92	20	
PLW HEATER A -	Nheater_PLW1	104	39	
PLW HEATER A shld	Gnd_Bias_Ph	93 (F1)	59	
PLW_JFETV1_A +	Vdd11_P	99	36	
PLW_JFETV1_A -	Vss11_P	100	17	
PLW_JFETV1_A shld	Gnd_Bias_Ph	128 (E1)	37 (E1)	
PLW_JFETV2_A +	Vdd12_P	110	18	
PLW_JFETV2_A -	Vss12_P	111	19	
PLW_JFETV2_A shld	Gnd_Bias_Ph	128 (E1)	38 (E1)	
PLW_BIAS1_A +	Pbias_P500	118	75	
PLW_BIAS1_A -	Nbias_P500	119	76	
PLW_BIAS1_A shld	Gnd_Bias_Ph	128 (E1)	56 (E1)	
PLW_BIAS2_A +	Pbias_P500	112	77	
PLW_BIAS2_A -	Nbias_P500	120	57	
PLW_BIAS2_A shld	Gnd_Bias_Ph	128 (E1)	58 (E1)	
PLW GROUND WIRE A	Gnd_Bias_Ph	128 (E1)	78 (E1)	
PSW_JFETV1_B +	Vdd1_P	42		1
PSW_JFETV1_B -	Vss1_P	54		2
PSW_JFETV1_B shld	Gnd_Bias_Ph	1 (A2)		21 (A2)
PSW_JFETV2_B +	Vdd2_P	53		3
PSW_JFETV2_B -	Vss2_P	52		23
PSW_JFETV2_B shld	Gnd_Bias_Ph	1 (A2)		22 (A2)
PSW_JFETV3_B +	Vdd3_P	41		4
PSW_JFETV3_B -	Vss3_P	30		5
PSW_JFETV3_B shld	Gnd_Bias_Ph	1 (A2)		24 (A2)
PSW_JFETV4_B +	Vdd4_P	10		41
PSW_JFETV4_B -	Vss4_P	11		60
PSW_JFETV4_B shld	Gnd_Bias_Ph	1 (A2)		40 (A2)
PSW_JFETV5_B +	Vdd5_P	19		61
PSW_JFETV5_B -	Vss5_P	29		62
PSW_JFETV5_B shld	Gnd_Bias_Ph	1 (A2)		42 (A2)
PSW_JFETV6_B +	Vdd6_P	16		63
PSW_JFETV6_B -	Vss6_P	27		44
PSW_JFETV6_B shld	Gnd_Bias_Ph	1 (A2)		43 (A2)
PSW GRND_B	Gnd_Bias_Ph	1 (A2)		27 (A2)
PSW_BIAS1/2_B +	PBias_P250	40		6
PSW_BIAS1/2_B -	Nbias_250	39		26
PSW_BIAS1/2_B shld	Gnd_Bias_Ph	1 (A2)		25 (A2)
PSW_BIAS3/4_B +	Pbias_P250	18		65
PSW_BIAS3/4_B -	Nbias_P250	28		64
PSW_BIAS3/4_B shld	Gnd_Bias_Ph	1 (A2)		45 (A2)
PSW_BIAS5/6_B +	Pbias_P250	9		47
PSW_BIAS5/6_B -	Nbias_P250	17		66
PSW_BIAS5/6_B shld	Gnd_Bias_Ph	1 (A2)		46 (A2)
PSW_HEATER_B1 +	Pheater_PSW1	13		8
PSW_HEATER_B1 -	Nheater_PSW1	12		9

Description	Signal Name	128-Way #3	78-way Photometer Biases (J29)	78-way Photometer Biases (J30)
PSW_HEATER_B1 shld	Gnd_Bias_Ph	5 (B2)		28 (B2)
PSW_HEATER_B2 +	Pheater_PSW2	21		29
PSW_HEATER_B2 -	Nheater_PSW2	20		49
PSW_HEATER_B2 shld	Gnd_Bias_Ph	5 (B2)		48 (B2)
PSW_HEATER_B3 +	Pheater_PSW3	31		68
PSW_HEATER_B3 -	Nheater_PSW3	43		67
PSW_HEATER_B3 shld	Gnd_Bias_Ph	5 (B2)		48 (B2)
FPU Faraday Shield Link	Gnd_Bias_Ph	4		7
PMW_JFETV1_B +	Vdd7_P	7		10
PMW_JFETV1_B -	Vss7_P	14		11
PMW_JFETV1_B shld	Gnd_Bias_Ph	6 (C2)		30 (C2)
PMW_JFETV2_B +	Vdd8_P	24		12
PMW_JFETV2_B -	Vss8_P	35		31
PMW_JFETV2_B shld	Gnd_Bias_Ph	6 (C2)		32 (C2)
PMW_JFETV3_B +	Vdd9_P	23		69
PMW_JFETV3_B -	Vss9_P	34		70
PMW_JFETV3_B shld	Gnd_Bias_Ph	6 (C2)		50 (C2)
PMW_JFETV4_B +	Vdd10_P	33		71
PMW_JFETV4_B -	Vss10_P	45		52
PMW_JFETV4_B shld	Gnd_Bias_Ph	6 (C2)		51 (C2)
PMW_BIAS1/2_B +	PBias_P350	44		14
PMW_BIAS1/2_B -	Nbias_P350	56		13
PMW_BIAS1/2_B shld	Gnd_Bias_Ph	6 (C2)		33 (C2)
PMW_BIAS3/4_B +	Pbias_P350	22		73
PMW_BIAS3/4_B -	Nbias_P350	32		72
PMW_BIAS3/4_B shld	Gnd_Bias_Ph	6 (C2)		53 (C2)
PMW GND WIRE_B	Gnd_Bias_Ph	6 (C2)		34 (C2)
PMW HEATER B1 +	Pheater_PMW1	55		16
PMW HEATER B1 -	Nheater_PMW1	66		15
PMW HEATER B1 shld	Gnd_Bias_Ph	65 (D2)		35 (D2)
PMW HEATER B2 +	Pheater_PMW2	67		54
PMW HEATER B2 -	Nheater_PMW2	78		74
PMW HEATER B2 shld	Gnd_Bias_Ph	65 (D2)		55 (D2)
PLW HEATER B +	Pheater_PLW1	90		20
PLW HEATER B -	Nheater_PLW1	79		39
PLW HEATER B shld	Gnd_Bias_Ph	91 (F2)		59
PLW_JFETV1_B +	Vdd11_P	70		36
PLW_JFETV1_B -	Vss11_P	81		17
PLW_JFETV1_B shld	Gnd_Bias_Ph	47 (E2)		37 (E2)
PLW_JFETV2_B +	Vdd12_P	69		18
PLW_JFETV2_B -	Vss12_P	80		19
PLW_JFETV2_B shld	Gnd_Bias_Ph	47 (E2)		38 (E2)
PLW_BIAS1_B +	Pbias_P500	68		75
PLW_BIAS1_B -	Nbias_P500	57		76
PLW_BIAS1_B shld	Gnd_Bias_Ph	47 (E2)		56 (E2)
PLW_BIAS2_B +	Pbias_P500	58		77
PLW_BIAS2_B -	Nbias_P500	46		57
PLW_BIAS2_B shld	Gnd_Bias_Ph	47 (E2)		58 (E2)
PLW GROUND WIRE B	Gnd_Bias_Ph	47 (E2)		78 (E2)
Harness Over-shield		EMC Backshell	EMC Backshell	EMC Backshell

4.2.4 S4 SVM-CB 4 – DRCU (Type 1) PMW

Overall Mechanical Drawing

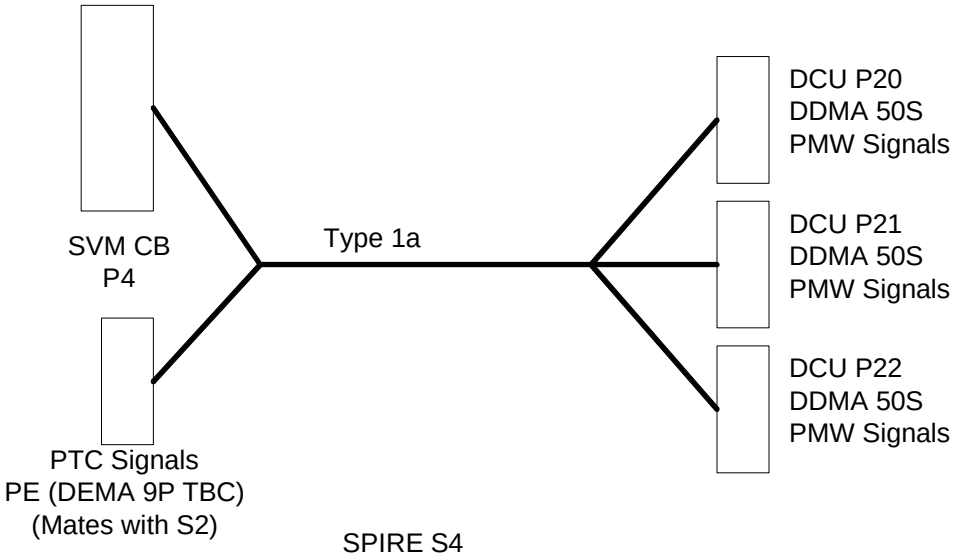

Connector/Backshell Details

DDMA 50 S + Glenair 557 - B - 357 - M - 5	to DCU J20	DCU-JFP	(45° Entry Backshell)
DDMA 50 S + Glenair 557 - E - 359 - M - 5	to DCU J21	DCU-JFP	(End Entry Backshell)
DDMA 50 S + Glenair 557 - B - 357 - M - 5	to DCU J22	DCU-JFP	(45° Entry Backshell)
DEMA 9 P + Glenair 557 - ? - ? - M - 1	to DCU J22	DCU-JFS via S2	

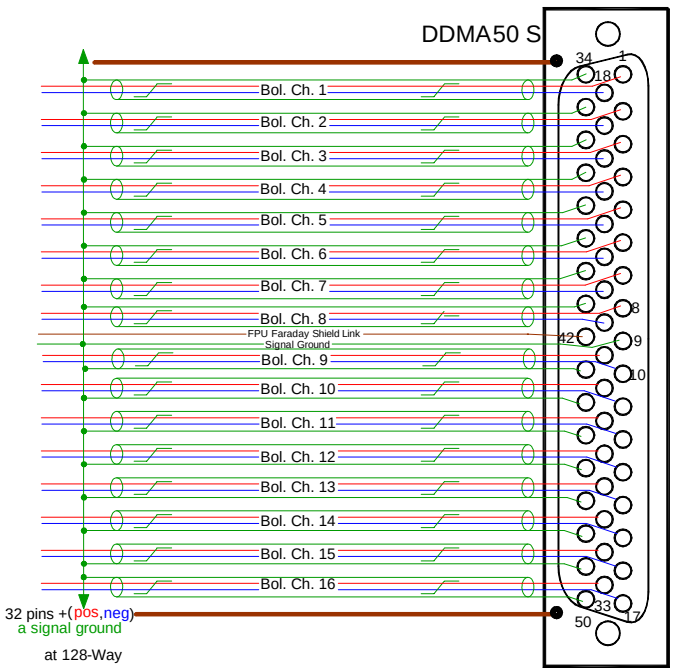

Type 1 DCU Tails

· This is the standard tail used for Photometer BDA readout (DCU P5 through to P21). Note that DCU P22 is different due to the incorporation of the PTC Signals

· 16 Insulated STPs
· 2 Single insulated ground wires

· The whole harness bundle is overlain with an RF screen Indicated by: ▬ which is connected to EMC backshells at the WE and the SVM-CB

· No harness bundle overall insulation baselined. May be added later by locally wrapping with insulating tape at contact points.

· Harness connector is a Socket. Drawing indicates pin allocation as seen from the rear, non-engaging face of the connector.

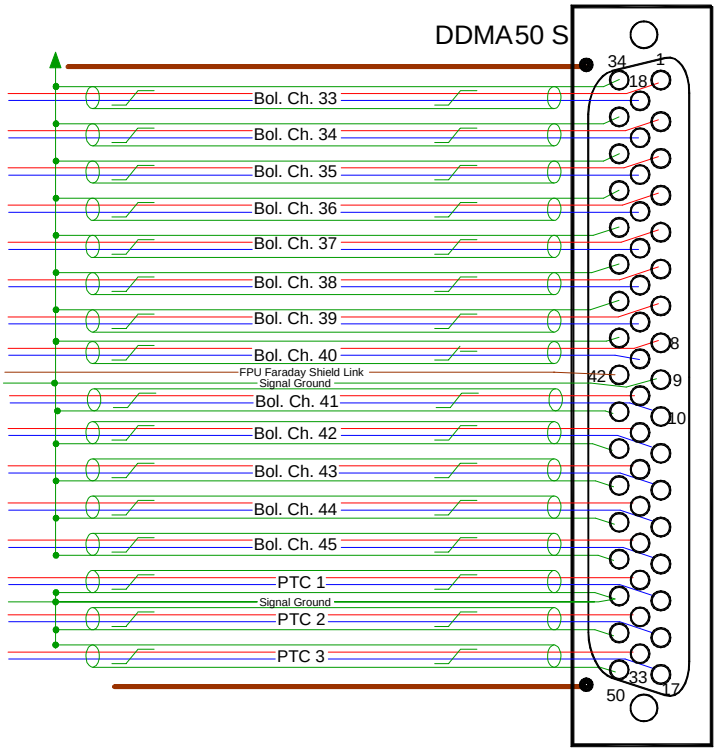

DCU P22
PMW and PTC Readout

· 16 Insulated STPs
· 3 Single insulated ground wires

· The whole harness bundle is overlain with an RF screen Indicated by: ▬ which is connected to EMC backshells at the WE and the wall of the CVV.

· No harness bundle overall insulation baselined. May be added later by locally wrapping with insulating tape at contact points.

· A and B represent the commoning of ground references within the connectors which pass through the 128-way CVV connector on individual pins.

· Harness connector is a Socket. Drawing indicates pin allocation as seen from the rear, non-engaging face of the connector.

SVM-CB S4 128-Way Pin Allocations (View of wiring side of connector)

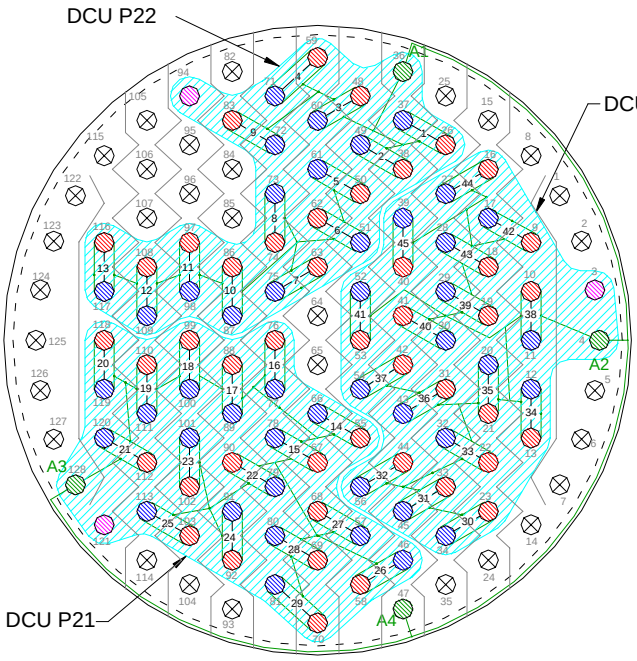

- Shields of STP are commoned as indicated by signal ground connections and passed through the 128-way by a dedicated ground pin.
- Pin 4 connected to Pins 47, 128, 36 (Ground wire links)

Signal Supply
Signal Return
Signal Ground
FPU Faraday Shield Link
No Connection
Harness Tails
Harness Overshield (Joined to connector chassis) – –

Contact Details

Notes:

- The contacts are named as "channels 1-45" end-to-end, and mapping to specific detector position is only maintained internally to the instrument. The information is in the BDA ICDs.
- The shields of the STP cables carrying, the ground wires (GND_WIRE) and Pins 36(A1), 4(A2), 128(A3) and 47(A4) of the 128-way connector are all joined to form a ground reference plane. Pin numbers for connector PE assume the use of a DEMA 9 connector. This connector type is TCB
- Refer to Annex 7 - PTC Cryoharnessing that indicates graphically the means by which these signals are wired.

Name	128Way #4	DCU J20	DCU J21	DCU J22	PE (I/F S2/S4)
Ground Pin	47 (A4)				
Channel 1 +	26	1			
Channel 1 -	37	18			
Channel 1 gnd shld	36 (A1)	34			
Channel 2 +	38	2			
Channel 2 -	49	19			
Channel 2 gnd shld	36 (A1)	35			
Channel 3 +	48	3			
Channel 3 -	60	20			
Channel 3gnd shld	36 (A1)	36			
Channel 4 +	59	4			
Channel 4 -	71	21			
Channel 4gnd shld	36 (A1)	37			
Channel 5 +	50	5			
Channel 5 -	61	22			
Channel 5gnd shld	36 (A1)	38			
Channel 6 +	62	6			
Channel 6 -	51	23			
Channel 6gnd shld	36 (A1)	39			
Channel 7 +	63	7			
Channel 7 -	75	24			
Channel 7gnd shld	36 (A1)	40			
Channel 8 +	74	8			
Channel 8 -	73	25			
Channel 8gnd shld	36 (A1)	41			
Signal Ground	36 (A1)	9			
FPU Faraday Shield Link	94	42			
Channel 9 +	83	26			
Channel 9 -	72	10			
Channel 9gnd shld	36 (A1)	43			
Channel 10 +	86	27			
Channel 10 -	87	11			
Channel 10 gnd shld	36 (A1)	44			
Channel 11 +	97	28			
Channel 11 -	98	12			
Channel 11 gnd shld	36 (A1)	45			
Channel 12 +	108	29			
Channel 12 -	109	13			
Channel 12 gnd shld	36 (A1)	46			
Channel 13 +	116	30			
Channel 13 -	117	14			
Channel 13gnd shld	36 (A1)	47			
Channel 14 +	55	31			
Channel 14 -	66	15			
Channel 14 gnd shld	128 (A3)	48			
Channel 15 +	67	32			
Channel 15 -	78	16			

Name	128Way #4	DCU J20	DCU J21	DCU J22	PE (I/F S2/S4)
Channel 15gnd shld	128 (A3)	49			
Channel 16 +	76	33			
Channel 16 -	77	17			
Channel 16gnd shld	128 (A3)	50			
Channel 17 +	88		1		
Channel 17 -	89		18		
Channel 17gnd shld	128 (A3)		34		
Channel 18 +	99		2		
Channel 18 -	100		19		
Channel 18gnd shld	128 (A3)		35		
Channel 19 +	110		3		
Channel 19 -	111		20		
Channel 19gnd shld	128 (A3)		36		
Channel 20 +	118		4		
Channel 20 -	119		21		
Channel 20gnd shld	128 (A3)		37		
Channel 21 +	112		5		
Channel 21 -	120		22		
Channel 21gnd shld	128 (A3)		38		
Channel 22 +	90		6		
Channel 22 -	79		23		
Channel 22gnd shld	128 (A3)		39		
Channel 23 +	102		7		
Channel 23 -	101		24		
Channel 23gnd shld	128 (A3)		40		
Channel 24 +	92		8		
Channel 24 -	91		25		
Channel 24gnd shld	128 (A3)		41		
Signal Ground	128 (A3)		9		
FPU Faraday Shield Link	121		42		
Channel 25 +	103		26		
Channel 25 -	113		10		
Channel 25gnd shld	128 (A3)		43		
Channel 26 +	58		27		
Channel 26 -	46		11		
Channel 26gnd shld	128 (A3)		44		
Channel 27 +	68		28		
Channel 27 -	57		12		
Channel 27gnd shld	128 (A3)		45		
Channel 28 +	69		29		
Channel 28 -	80		13		
Channel 28gnd shld	128 (A3)		46		
Channel 29 +	70		30		
Channel 29 -	81		14		
Channel 29gnd shld	128 (A3)		47		
Channel 30 +	23		31		
Channel 30 -	34		15		
Channel 30gnd shld	4 (A2)		48		
Channel 31 +	33		32		
Channel 31 -	45		16		
Channel 31gnd shld	4 (A2)		49		
Channel 32 +	44		33		
Channel 32 -	56		17		
Channel 32gnd shld	4 (A2)		50		
Channel 33 +	22			1	
Channel 33 -	32			18	
Channel 33gnd shld	4 (A2)			34	
Channel 34 +	13			2	
Channel 34 -	12			19	

Name	128Way #4	DCU J20	DCU J21	DCU J22	PE (I/F S2/S4)
Channel 34gnd shld	4 (A2)			35	
Channel 35 +	21			3	
Channel 35 -	20			20	
Channel 35gnd shld	4 (A2)			36	
Channel 36 +	31			4	
Channel 36 -	43			21	
Channel 36 gnd shld	4 (A2)			37	
Channel 37 +	42			5	
Channel 37 -	54			22	
Channel 37 gnd shld	4 (A2)			38	
Channel 38 +	10			6	
Channel 38 -	11			23	
Channel 38 gnd shld	4 (A2)			39	
Channel 39 +	19			7	
Channel 39 -	29			24	
Channel 39 gnd shld	4 (A2)			40	
Channel 40 +	41			8	
Channel 40 -	30			25	
Channel 40 gnd shld	4 (A2)			41	
Signal Ground	4 (A2)			9	
FPU Faraday Shield Link	3			42	
Channel 41 +	53			26	
Channel 41 -	52			10	
Channel 41 gnd shld	4 (A2)			43	
Channel 42 +	9			27	
Channel 42 -	17			11	
Channel 42 gnd shld	4 (A2)			44	
Channel 43 +	18			28	
Channel 43 -	28			12	
Channel 43 gnd shld	4 (A2)			45	
Channel 44 +	16			29	
Channel 44 -	27			13	
Channel 44 gnd shld	4 (A2)			46	
Channel 45 +	40			30	
Channel 45 -	39			14	
Channel 45 gnd shld	4 (A2)			47	
PTC Ch. 1 +	N.C.			31	1 (TBC – See Notes above)
PTC Ch. 1 -	N.C.			15	6 (TBC)
PTC Ch. 1 Gnd Shld	N.C.			48	2 (TBC)
PTC Ch. 2+	N.C.			32	3 (TBC)
PTC Ch. 2 -	N.C.			16	7 (TBC)
PTC Ch. 2 Gnd Shld	N.C.			49	8 (TBC)
PTC Ch. 3 +	N.C.			33	4 (TBC)
PTC Ch. 3 -	N.C.			17	5 (TBC)
PTC Ch. 3 Gnd Shld	N.C.			50	9 (TBC)
Harness Overshield	EMC Backshell	EMC Backshell	EMC Backshell	EMC Backshell	EMC Backshell

4.2.5 S5 SVM-CB 5 – DRCU (Type 1) PMW

Overall Mechanical Drawing

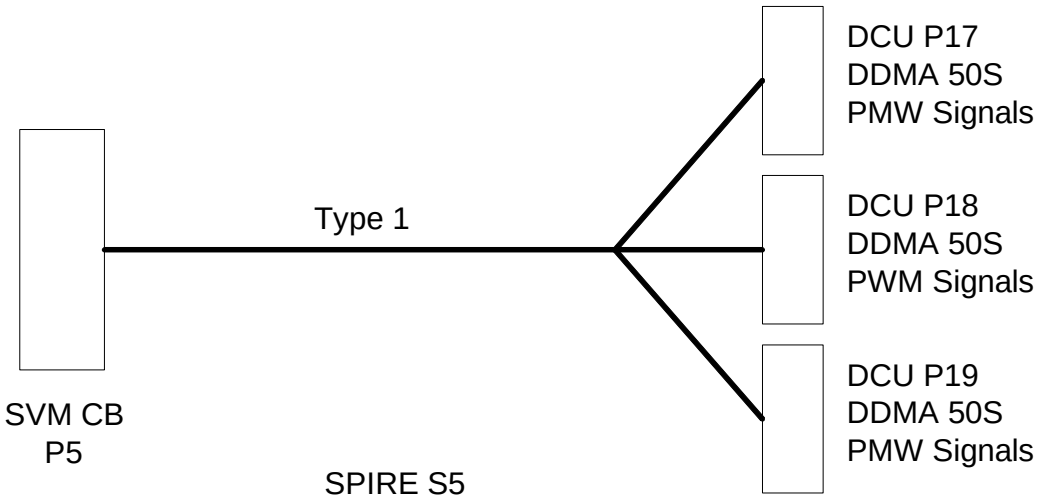

Connector/Backshell Details

DDMA 50 S + Glenair 557 - E - 359 - M - 5	TBD	to DCU J17	DCU-JFP
DDMA 50 S + Glenair 557 - B - 357 - M - 5	TBD	to DCU J18	DCU-JFP
DDMA 50 S + Glenair 557 - E - 359 - M - 5	TBD	to DCU J19	DCU-JFP

SVM-CB S5 128-Way Pin Allocations (View of wiring side of connector)

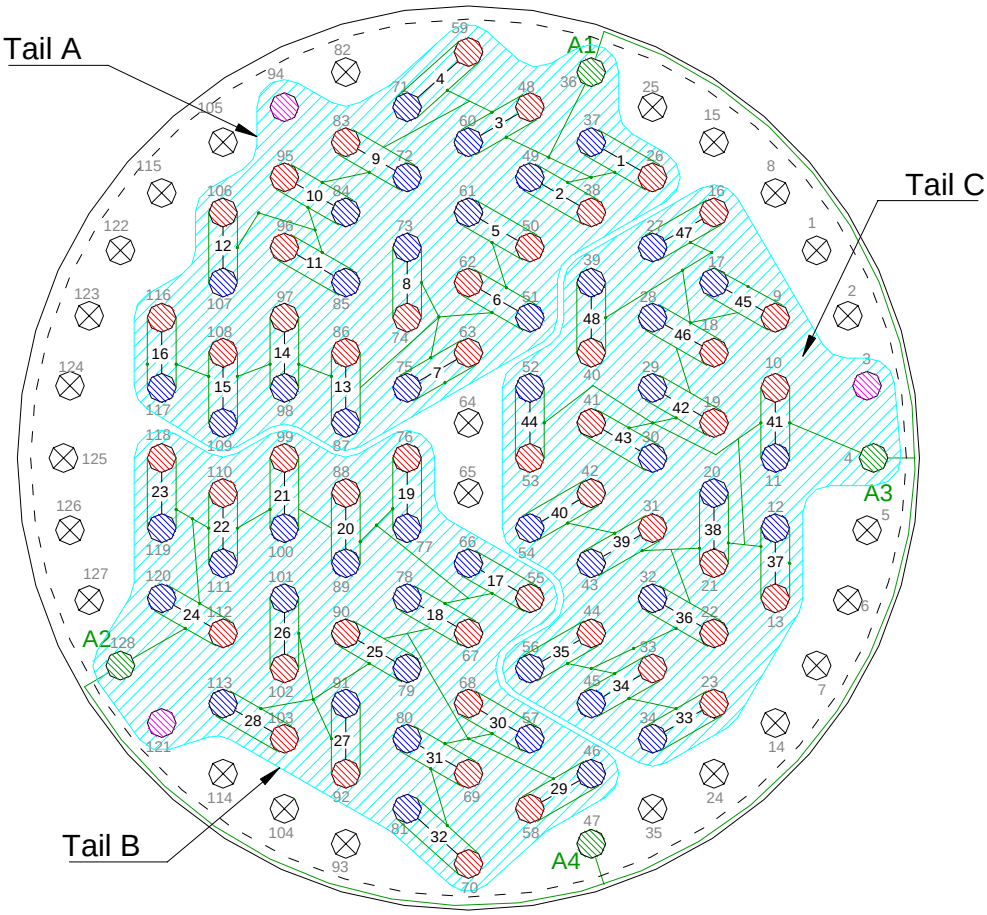

- Shields of STP are commoned as indicated by signal ground connections and passed through the 128-way by a dedicated ground pin.
- Pin 4 connected to Pin 47 (Ground wire link)

- 103 of 128 Contacts Used

Signal Supply
Signal Return
Signal Ground
FPU Faraday Shield Link
No Connection
Harness Tails
Harness Overshield (Joined to connector chassis)

Tail A = HSDCU P17
Tail B = HSDCU P18
Tail C = HSDCU P19

Contact Details

Name	128Way #5	50way A	50wayB	50way C
Ground Pin	47 (A4)			
Channel 1 +	26	1		
Channel 1 -	37	18		
Channel 1gnd shld	36 (A1)	34		
Channel 2 +	38	2		
Channel 2 -	49	19		
Channel 2gnd shld	36 (A1)	35		
Channel 3 +	48	3		
Channel 3 -	60	20		
Channel 3gnd shld	36 (A1)	36		
Channel 4 +	59	4		
Channel 4 -	71	21		
Channel 4gnd shld	36 (A1)	37		
Channel 5 +	50	5		
Channel 5 -	61	22		
Channel 5gnd shld	36 (A1)	38		
Channel 6 +	62	6		
Channel 6 -	51	23		
Channel 6gnd shld	36 (A1)	39		
Channel 7 +	63	7		
Channel 7 -	75	24		
Channel 7gnd shld	36 (A1)	40		
Channel 8 +	74	8		
Channel 8 -	73	25		
Channel 8gnd shld	36 (A1)	41		
GND WIRE	36 (A1)	9		
FPU Faraday Shield Link	94	42		
Channel 9 +	83	26		
Channel 9 -	72	10		
Channel 9gnd shld	36 (A1)	43		
Channel 10 +	95	27		
Channel 10 -	84	11		
Channel 10gnd shld	36 (A1)	44		
Channel 11 +	96	28		
Channel 11 -	85	12		
Channel 11gnd shld	36 (A1)	45		
Channel 12 +	36	29		
Channel 12 -	107	13		
Channel 12gnd shld	36 (A1)	46		
Channel 13 +	86	30		
Channel 13 -	87	14		
Channel 13gnd shld	36 (A1)	47		
Channel 14 +	97	31		
Channel 14 -	98	15		
Channel 14gnd shld	36 (A1)	48		
Channel 15 +	108	32		
Channel 15 -	109	16		
Channel 15gnd shld	36 (A1)	49		
Channel 16 +	116	33		
Channel 16 -	117	17		
Channel 16gnd shld	36 (A1)	50		
Channel 17 +	55		1	
Channel 17 -	66		18	
Channel 17gnd shld	128 (A2)		34	
Channel 18 +	67		2	
Channel 18 -	78		19	

Name	128Way #5	50way A	50wayB	50way C
Channel 18gnd shld	128 (A2)		35	
Channel 19 +	76		3	
Channel 19 -	77		20	
Channel 19gnd shld	128 (A2)		36	
Channel 20 +	88		4	
Channel 20 -	89		21	
Channel 20gnd shld	128 (A2)		37	
Channel 21 +	99		5	
Channel 21 -	100		22	
Channel 21gnd shld	128 (A2)		38	
Channel 22 +	110		6	
Channel 22 -	111		23	
Channel 22gnd shld	128 (A2)		39	
Channel 23 +	118		7	
Channel 23 -	119		24	
Channel 23gnd shld	128 (A2)		40	
Channel 24 +	112		8	
Channel 24 -	120		25	
Channel 24gnd shld	128 (A2)		41	
GND WIRE	128 (A2)		9	
FPU Faraday Shield Link	121		42	
Channel 25 +	90		26	
Channel 25 -	79		10	
Channel 25gnd shld	128 (A2)		43	
Channel 26 +	102		27	
Channel 26 -	101		11	
Channel 26gnd shld	128 (A2)		44	
Channel 27 +	92		28	
Channel 27 -	91		12	
Channel 27gnd shld	128 (A2)		45	
Channel 28 +	103		29	
Channel 28 -	113		13	
Channel 28gnd shld	128 (A2)		46	
Channel 29 +	58		30	
Channel 29 -	46		14	
Channel 29gnd shld	128 (A2)		47	
Channel 30 +	68		31	
Channel 30 -	57		15	
Channel 30gnd shld	128 (A2)		48	
Channel 31 +	69		32	
Channel 31 -	80		16	
Channel 31gnd shld	128 (A2)		49	
Channel 32 +	70		33	
Channel 32 -	81		17	
Channel 32gnd shld	128 (A2)		50	
Channel 33 +	23			1
Channel 33 -	34			18
Channel 33gnd shld	4 (A3)			34
Channel 34 +	33			2
Channel 34 -	45			19
Channel 34gnd shld	4 (A3)			35
Channel 35 +	44			3
Channel 35 -	56			20
Channel 35gnd shld	4 (A3)			36
Channel 36 +	22			4
Channel 36 -	32			21
Channel 36gnd shld	4 (A3)			37
Channel 37 +	13			5
Channel 37 -	12			22

Name	128Way #5	50way A	50wayB	50way C
Channel 37gnd shld	4 (A3)			38
Channel 38 +	21			6
Channel 38 -	20			23
Channel 38gnd shld	4 (A3)			39
Channel 39 +	31			7
Channel 39 -	43			24
Channel 39gnd shld	4 (A3)			40
Channel 40 +	42			8
Channel 40 -	54			25
Channel 40gnd shld	4 (A3)			41
GND WIRE	4 (A3)			9
FPU Faraday Shield Link	3			42
Channel 41 +	10			26
Channel 41 -	11			10
Channel 41gnd shld	4 (A3)			43
Channel 42 +	19			27
Channel 42 -	29			11
Channel 42gnd shld	4 (A3)			44
Channel 43 +	41			28
Channel 43 -	30			12
Channel 43gnd shld	4 (A3)			45
Channel 44 +	53			29
Channel 44 -	52			13
Channel 44gnd shld	4 (A3)			46
Channel 45 +	9			30
Channel 45 -	17			14
Channel 45gnd shld	4 (A3)			47
Channel 46 +	18			31
Channel 46 -	28			15
Channel 46gnd shld	4 (A3)			48
Channel 47 +	16			32
Channel 47 -	27			16
Channel 47gnd shld	4 (A3)			49
Channel 48 +	40			33
Channel 48 -	39			17
Channel 48gnd shld	4 (A3)			50
Harness Overshield	EMC Backshell	EMC Backshell	EMC Backshell	EMC Backshell

4.2.6 S6 SVM-CB 6 – DRCU (Type 1) PLW

Overall Mechanical Drawing

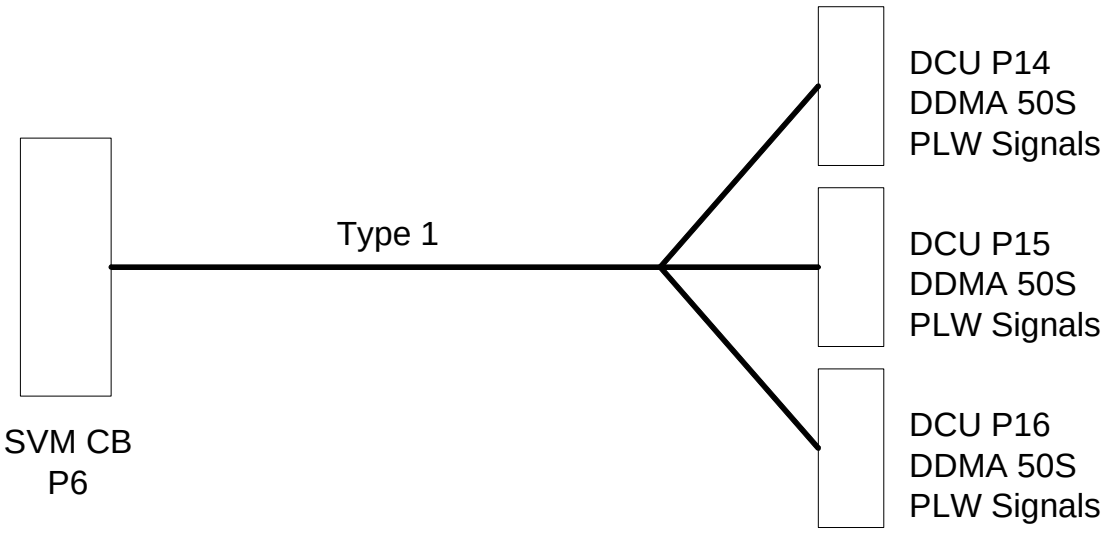

SPIRE S6

Connector/Backshell Details

DDMA 50 S + Glenair 557 - B - 357 - M - 5 -	TBD	to DCU J14	DCU-JFP
DDMA 50 S + Glenair 557 - E - 359 - M - 5 -	TBD	to DCU J15	DCU-JFP
DDMA 50 S + Glenair 557 - B - 357 - M - 5 -	TBD	to DCU J16	DCU-JFP

Harness Layup

As I 5 except
Tail A = HSDCU P14
Tail B = HSDCU P15
Tail C = HSDCU P16

Contact Details

As I 5

4.2.7 S7 SVM-CB 7 – DRCU (Type 1) PSW

Overall Mechanical Drawing

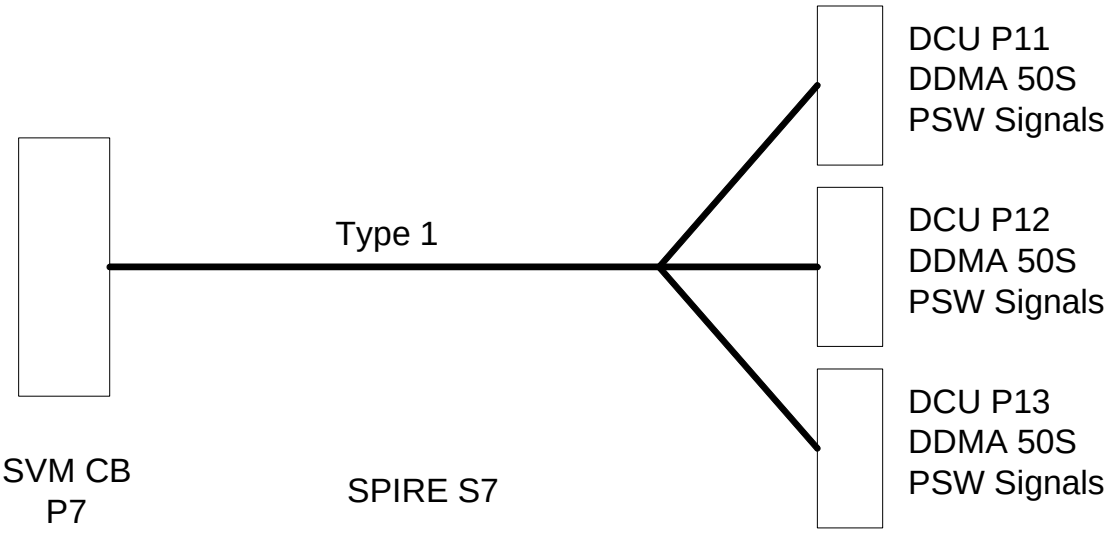

Connector/Backshell Details

DDMA 50 S	+	Glenair 557 - E - 359 - M - 5 to DCU J11	DCU-JFP
DDMA 50 S	+	Glenair 557 - B - 357 - M - 5 to DCU J12	DCU-JFP
DDMA 50 S	+	Glenair 557 - E - 359 - M - 5 to DCU J13	DCU-JFP

Harness Layup

As I5 except
Tail A = HSDCU P11
Tail B = HSDCU P12
Tail C = HSDCU P13

Contact Details

As I 5

4.2.8 S8 SVM-CB 8 – DRCU (Type 1) PSW

Overall Mechanical Drawing

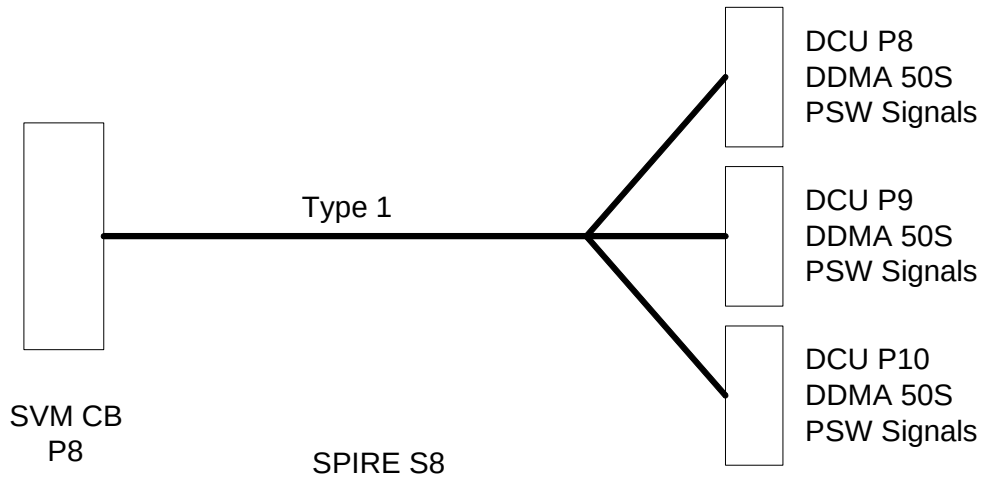

Connector/Backshell Details

DDMA 50 S + Glenair 557 - B - 357 - M - 5 to DCU J8	DCU-JFP
DDMA 50 S + Glenair 557 - E - 359 - M - 5 to DCU J9	DCU-JFP
DDMA 50 S + Glenair 557 - B - 357 - M - 5 to DCU J10	DCU-JFP

Harness Layup

As I5 except
Tail A = HSDCU P8
Tail B = HSDCU P9
Tail C = HSDCU P10

Contact Details

As I 5

4.2.9 S9 SVM-CB 9 – DRCU (Type 1) PSW

Overall Mechanical Drawing

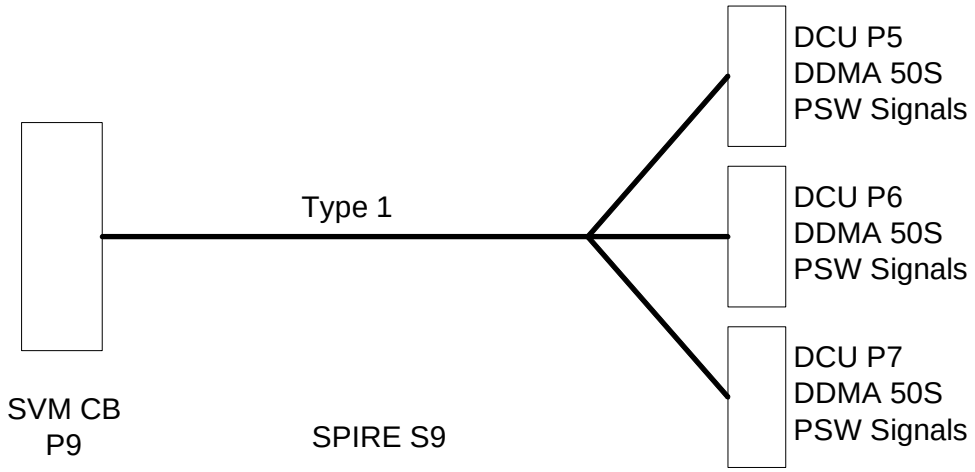

Connector/Backshell Details

DDMA 50 S + Glenair 557 - E - 359 - M - 5 to DCU J5	DCU-JFP
DDMA 50 S + Glenair 557 - B - 357 - M - 5 to DCU J6	DCU-JFP
DDMA 50 S + Glenair 557 - E - 359 - M - 5 to DCU J7	DCU-JFP

Harness Layup

As I 5 except
Tail A = HSDCU P5
Tail B = HSDCU P6
Tail C = HSDCU P7

Contact Details

As I 5

4.2.10 S10 SVM-CB 10 – DRCU AUX-P

Overall Mechanical Drawing

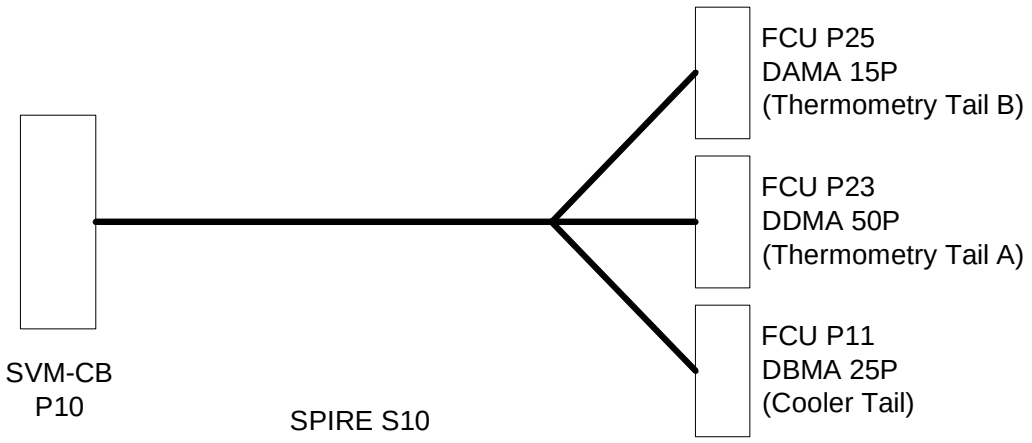

Connector/Backshell Details

Prime side harness

DBMA 25 P + Glenair 557 - E - 359 - M - 3	to	FCU	J11	Cooer Tail (Prime)
DDMA 50 P + Glenair 557 - E - 359 - M - 5	to	FCU	J23	FPU Thermometry Tail A (Prime)
DAMA 15 P + Glenair 557 - E - 359 - M - 2	to	FCU	J25	FPU Thermometry Tail B (Prime)

Heaters (FCU P11)

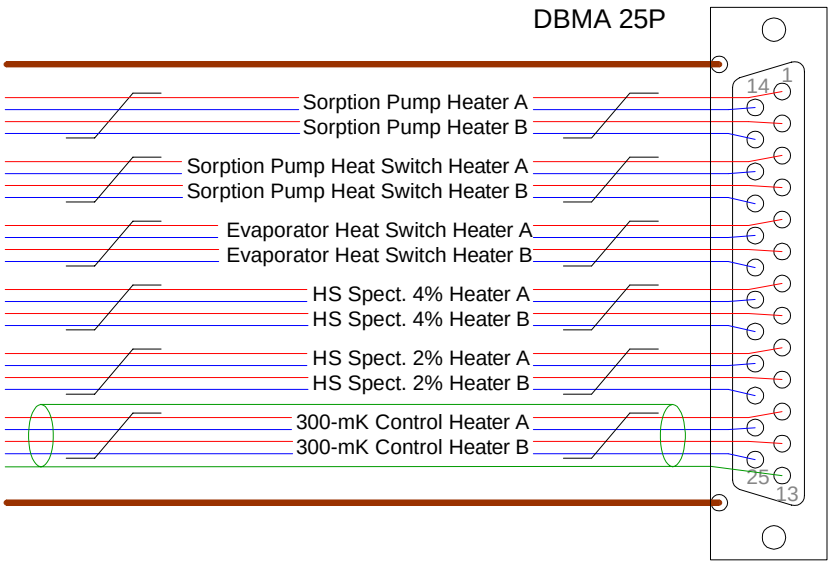

Heaters FCU P11

· 5 TQ
· 1 STQ

· The whole harness bundle is overlain with an RF screen Indicated by: ——— which is connected to EMC backshells at the WE and the SVM-CB

· No harness bundle overall insulation baselined. May be added later by locally wrapping with insulating tape at contact points.

FPU Thermometry Tail B (FCU J25)

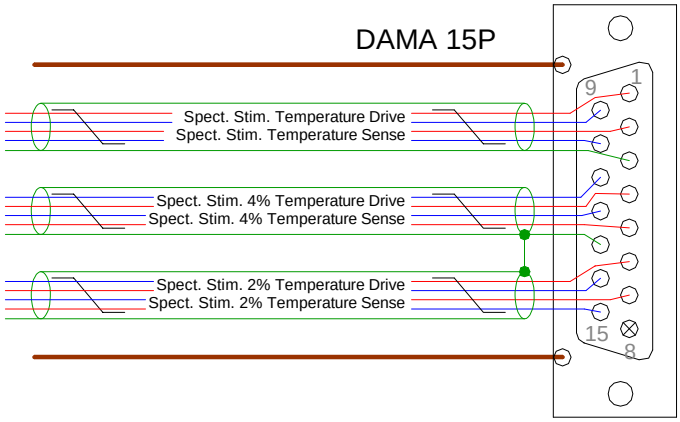

FPU Thermometry B (FCU P25/P26)

· The whole harness bundle is overlain with an RF screen Indicated by: ——— which is connected to EMC backshells at the Shutter and at the wall of the CVV.

· No harness bundle overall insulation baselined. May be added later by locally wrapping with insulation at contact points.

FPU Thermometry Tail A (FCU P23)

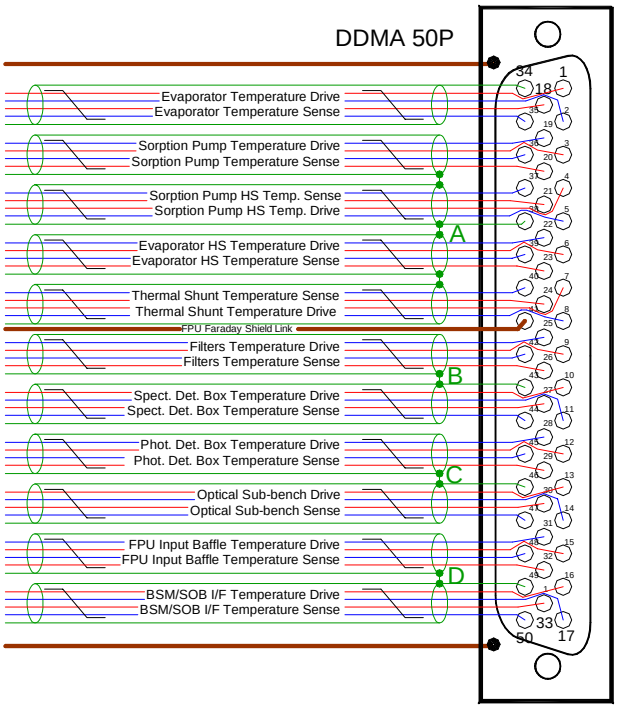

FPU Thermometry A (FCU P23/P24)

· 11 STQ
· 1 Single

· The whole harness bundle is overlain with an RF screen Indicated by: ——— which is connected to EMC backshells at the Shutter and at the SVM-CB.

· No harness bundle overall insulation baselined. May be added later by locally wrapping with insulation at contact points.

SVM-CB S10 128-Way Pin Allocations (View of wiring side of connector)

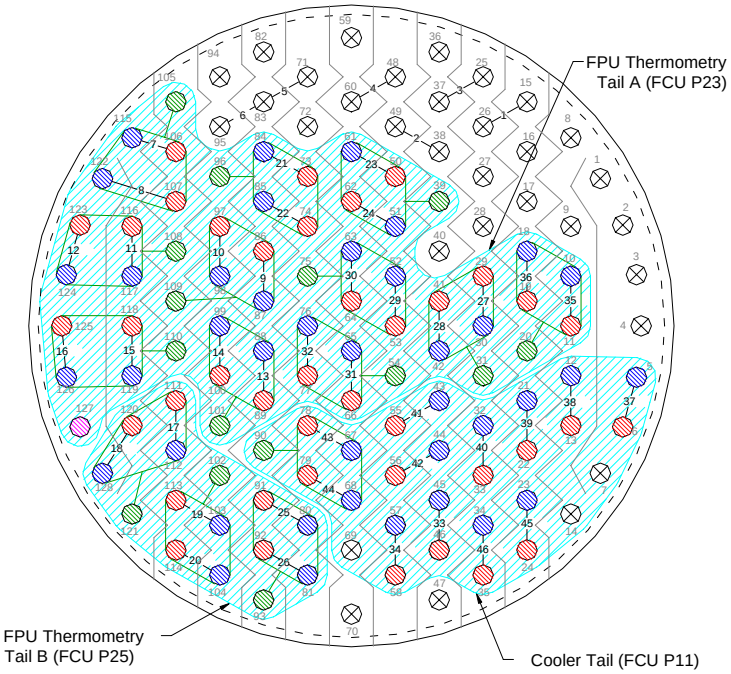

- Shields of STP and STQ are commoned as indicated by signal ground connections and passed through the 128-way by a dedicated ground pin.

Signal Supply
Signal Return
Signal Ground
FPU Faraday Shield Link
No Connection
Harness Tails
Harness Overshield (Joined to connector chassis)

S10 128-Way FPU Thermometry Tail A Pin Allocation

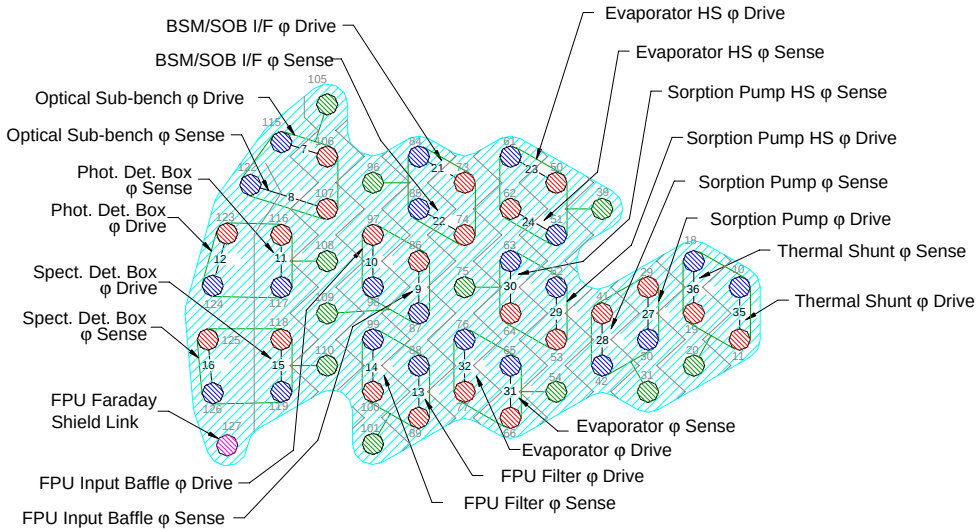

FPU Thermometry Tail A (FCU P23)

S10 128-Way FPU Thermometry Tail B Pin Allocation

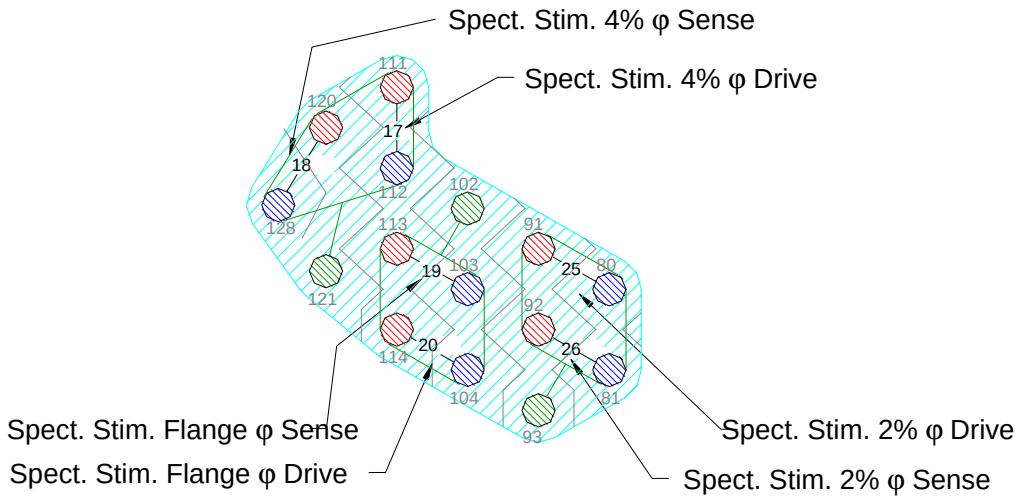

FPU Thermometry Tail B (FCU P25)

S10 128-Way Cooler Tail Pin Allocation

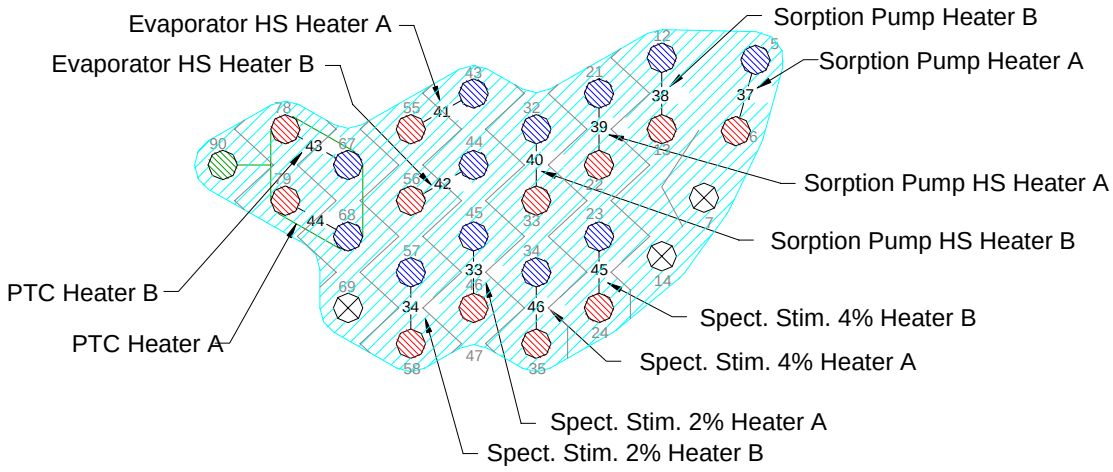

Cooler Tail (FCU P11)

Cooler Tail Listing P11

Function	25way P11	Max. Current	Wire Lay-up	Max Ohms	128Way #10
Sorption Pump Heater I+_A	1	25 mA	Twisted quad	10	6
Sorption Pump Heater I+_B	2	25 mA		10	13
Sorption Pump Heater I-_A	14	25 mA		10	5
Sorption Pump Heater I-_B	15	25 mA		10	12
Sorption Pump Heat Switch Heater I+_A	3	1.5 mA	Twisted quad	50	22
Sorption Pump Heat Switch Heater I+_B	4	1.5 mA		50	33
Sorption Pump Heat Switch Heater I-_A	16	1.5 mA		50	21
Sorption Pump Heat Switch Heater I-_B	17	1.5 mA		50	32
Evaporator Heat Switch Heater I+_A	5	1.5 mA	Twisted quad	50	55
Evaporator Heat Switch Heater I+_B	6	1.5 mA		50	56
Evaporator Heat Switch Heater I-_A	18	1.5 mA		50	43
Evaporator Heat Switch Heater I-_B	19	1.5 mA		50	44
HS Spect. 4% Heater I+_A	7	9 mA	Twisted quad	30	35
HS Spect. 4% Heater I+_B	8	9 mA		30	24
HS Spect. 4% Heater I-_A	20	9 mA		30	34
HS Spect. 4% Heater I-_B	21	9 mA		30	23
HS Spect. 2% Heater I+_A	9	7 mA	Twisted quad	30	46
HS Spect. 2% Heater I+_B	10	7 mA		30	58
HS Spect. 2% Heater I-_A	22	7 mA		30	45
HS Spect. 2% Heater I-_B	23	7 mA		30	57
Phot. Thermal Control Heater I+_A	11	2mA	Insulated Screened Twisted quad	100	79
Phot. Thermal Control Heater I+_B	12	2 mA		100	78
Phot. Thermal Control Heater I-_A	24	2 mA		100	68
Phot. Thermal Control Heater I-_B	25	2 mA		100	67
Phot. Thermal Control Heater shld.	13			N/A	90
Harness Overshield	EMC Backshell				

25ways used

FPU Thermometry Tail A (FCU P23)

Function	Signal Name	50 way P23	Max. Current	Wire Lay-up	Max Ohms	128Way #10
Evaporator temperature I+	T_CEV_1_D+	1	1 µA	Insulated screened twisted quad	1000	77
Evaporator temperature V+	T_CEV_1_S+	18	N/A		1000	66
Evaporator temperature V-	T_CEV_1_S-	35	N/A		1000	65
Evaporator temperature I-	T_CEV_1_D-	2	1 µA		1000	76
Evaporator temperature shld	T_CEV_1_SHD	34	N/A		N/A	54
Sorption Pump temperature I+	T_CPHP_1_D+	3	1 µA	Insulated screened twisted quad	1000	29
Sorption Pump temperature V+	T_CPHP_1_S+	20	N/A		1000	41
Sorption Pump temperature V-	T_CPHP_1_S-	36	N/A		1000	42
Sorption Pump temperature I-	T_CPHP_1_D-	19	1 µA		1000	30
Sorption Pump temperature shld	T_TP_1_SHDA	38 (A)	N/A		N/A	31
Sorption Pump Heat Switch temp I+	T_CPHS_1_D+	4	1 µA	Insulated screened twisted quad	1000	53
Sorption Pump Heat Switch temp V+	T_CPHS_1_S+	21	N/A		1000	64
Sorption Pump Heat Switch temp V-	T_CPHS_1_S-	37	N/A		1000	63
Sorption Pump Heat Switch temp I-	T_CPHS_1_D-	5	1 µA		1000	52
Sorption Pump Heat Switch temp shld	T_TP_1_SHDA	38 (A)	N/A		N/A	75
Evaporator Heat Switch temperature I+	T_CEHS_1_D+	6	1 µA	Insulated screened twisted	1000	50
Evaporator Heat Switch temperature V+	T_CEHS_1_S+	23	N/A		1000	62
Evaporator Heat Switch temperature V-	T_CEHS_1_S-	39	N/A		1000	51
Evaporator Heat Switch temperature I-	T_CEHS_1_D-	22	1 µA		1000	61

Function	Signal Name	50 way P23	Max. Current	Wire Lay-up	Max Ohms	128Way #10
Evaporator Heat Switch temperature shld	T_TP_1_SHDA	38 (A)	N/A	quad	N/A	39
Thermal Shunt temperature I+_A	T_CSHT_1_D+	7	1 µA	Insulated screened twisted quad	1000	11
Thermal Shunt temperature V+_B	T_CSHT_1_S+	24	N/A		1000	19
Thermal Shunt temperature V- _A	T_CSHT_1_S-	40	N/A		1000	18
Thermal Shunt temperature I- _B	T_CSHT_1_D-	8	1 µA		1000	10
Thermal Shunt temperature shld	T_TP_1_SHDA	38 (A)	N/A		N/A	20
FPU Faraday Shield Link		41	N.A.	Single Wire	50	127
FPU Filter temperature I+	T_SOB_1_D+	9	1 µA	Insulated screened twisted quad	1000	89
FPU Filter temperature V+	T_SOB_1_S+	26	N/A		1000	100
FPU Filter temperature V-	T_SOB_1_S-	42	N/A		1000	99
FPU Filter temperature I-	T_SOB_1_D-	25	1 µA		1000	88
FPU Filter temperature shld	T_TP_1_SHDB	43 (B)	N/A		N/A	101
Spectrometer Det. Box temperature I+	T_SL0_1_D+	10	1 µA	Insulated screened twisted quad	1000	118
Spectrometer Det. Box temperature V+	T_SL0_1_S+	27	N/A		1000	125
Spectrometer Det. Box temperature V-	T_SL0_1_S-	44	N/A		1000	126
Spectrometer Det. Box temperature I-	T_SL0_1_D-	11	1 µA		1000	119
Spectrometer Det. Box temperature shld	T_TP_1_SHDB	43 (B)	N/A		N/A	110
Photometer Det. Box temperature I+	T_PL0_1_D+	12	1 µA	Insulated screened twisted quad	1000	123
Photometer Det. Box temperature V+	T_PL0_1_S+	29	N/A		1000	116
Photometer Det. Box temperature V-	T_PL0_1_S-	45	N/A		1000	117
Photometer Det. Box temperature I-	T_PL0_1_D-	28	1 µA		1000	124
Photometer Det. Box temperature shld	T_TP_1_SHDC	46 (C)	N/A		N/A	108
Optical SubBench temperature I+	T_SUB_1_D+	13	1 µA	Insulated screened twisted quad	1000	106
Optical SubBench temperature V+	T_SUB_1_S+	30	N/A		1000	107
Optical SubBench temperature V-	T_SUB_1_S-	47	N/A		1000	122
Optical SubBench temperature I-	T_SUB_1_D-	14	1 µA		1000	115
Optical SubBench temperature shld	T_TP_1_SHDC	46 (C)	N/A		N/A	105
HSFPU Input Baffle temperature I+	T_BAF_1_D+	15	1 µA	Insulated screened twisted quad	1000	97
HSFPU Input Baffle temperature V+	T_BAF_1_S+	32	N/A		1000	86
HSFPU Input Baffle temperature V-	T_BAF_1_S-	48	N/A		1000	87
HSFPU Input Baffle temperature I-	T_BAF_1_D-	31	1 µA		1000	98
HSFPU Input Baffle temperature shld	T_TP_1_SHDD	49 (D)	N/A		N/A	109
BSM/SOB I/F temperature I+	T_BSMS_1_D+	16	1 µA	Insulated screened twisted quad	1000	73
BSM/SOB I/F temperature V+	T_BSMS_1_S+	33	N/A		1000	74
BSM/SOB I/F temperature V-	T_BSMS_1_S-	50	N/A		1000	85
BSM/SOB I/F temperature I-	T_BSMS_1_D-	17	1 µA		1000	84
BSM/SOB I/F temperature shld	T_TP_1_SHDD	49 (D)	N/A		N/A	96
Harness Overshield	EMC Backshell					

FPU Thermometry Tail B (FCU P25)

Function	Signal Name	15-Way P25	Max. Current	Wire Lay-up	Max Ohms	128Way #10
Spect. Stim. Flange temperature I+	T_SCST_1_D+	1	1 µA	Insulated screened twisted quad	1000	114
Spect. Stim. Flange temperature V+	T_SCST_1_S+	2	N/A		1000	113
Spect. Stim. Flange temperature V-	T_SCST_1_S-	10	N/A		1000	103
Spect. Stim. Flange temperature I-	T_SCST_1_D-	9	1 µA		1000	104
Spect. Stim. Flange temperature shld	T_SCST_1_SHD	3	N/A		N/A	102
Spect. Stim. 4% temperature I+	T_SCL4_1_D+	4	1 µA	Insulated screened twisted quad	1000	111
Spect. Stim. 4% temperature V+	T_SCL4_1_S+	5	N/A		1000	120
Spect. Stim. 4% temperature V-	T_SCL4_1_S-	12	N/A		1000	128
Spect. Stim. 4% temperature I-	T_SCL4_1_D-	11	1 µA		1000	112
Spect. Stim. 4% temperature shld	T_SCL4_1_SHD	13 (A)	N/A		N/A	121
Spect. Stim. 2% temperature I+	T_SCL2_1_D+	6	1 µA	Insulated screened twisted quad	1000	91
Spect. Stim. 2% temperature V+	T_SCL2_1_S+	7	N/A		1000	92
Spect. Stim. 2% temperature V-	T_SCL2_1_S-	15	N/A		1000	81
Spect. Stim. 2% temperature I-	T_SCL2_1_D-	14	1 µA		1000	80
Spect. Stim. 2% temperature shld	T_SCL2_1_SHD	13 (A)	N/A		N/A	93
Harness Overshield	EMC Backshell					

4.2.11 S11 SVM-CB 11 – DRCU DRV-P

Overall Mechanical Drawing

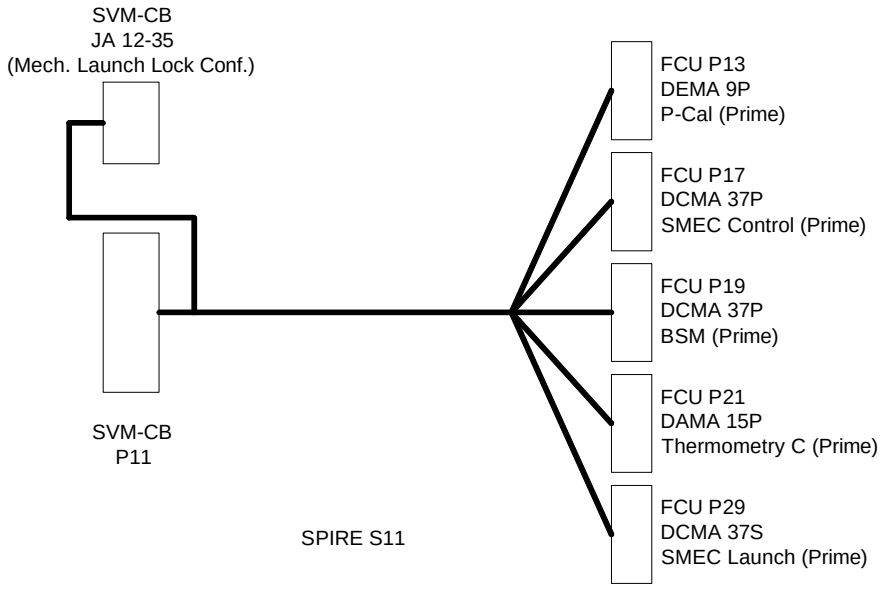

Connector/Backshell Details

DEMA 9 P + Glenair 557-T-357-M-1	to	FCU J13	P-Cal (Prime)
DCMA 37 P + Glenair 557-E-359-M-4	to	FCU J17	SMEC Control Module (Prime)
DCMA 37 P + Glenair 557-E-359-M-4	to	FCU J19	BSM Module (Prime)
DAMA 15 P + Glenair 557-T-357-M-2	to	FCU J21	Thermometry Tail C (Prime)
DCMA 37 S + Glenair 557-E-359-M-4	to	FCU J29	SMEC Launch (Prime)
MS27497T 12F35P + EMI Backshell	to	(PB) Mechanisms Launch Lock Conf. (Prime)	

Photometer Stimulus P13

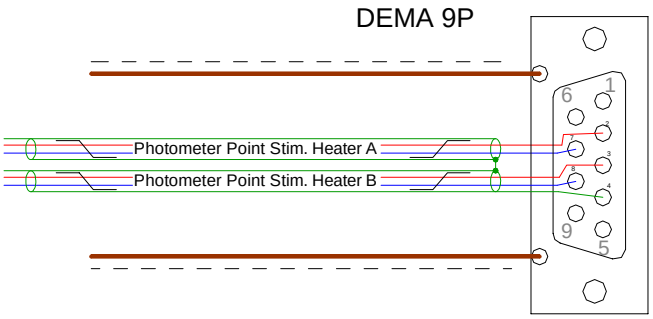

Phot. Stimulus (FCU P13/P14)

· The whole harness bundle is overlain with an RF screen Indicated by: ——— which is connected to EMC backshells at the FCU and at the wall of the CVV.

· The dotted lines indicate insulation jacket covering the overshield. Only required at clamp points but could cover entire length of harness.

BSM Tail FCU P19

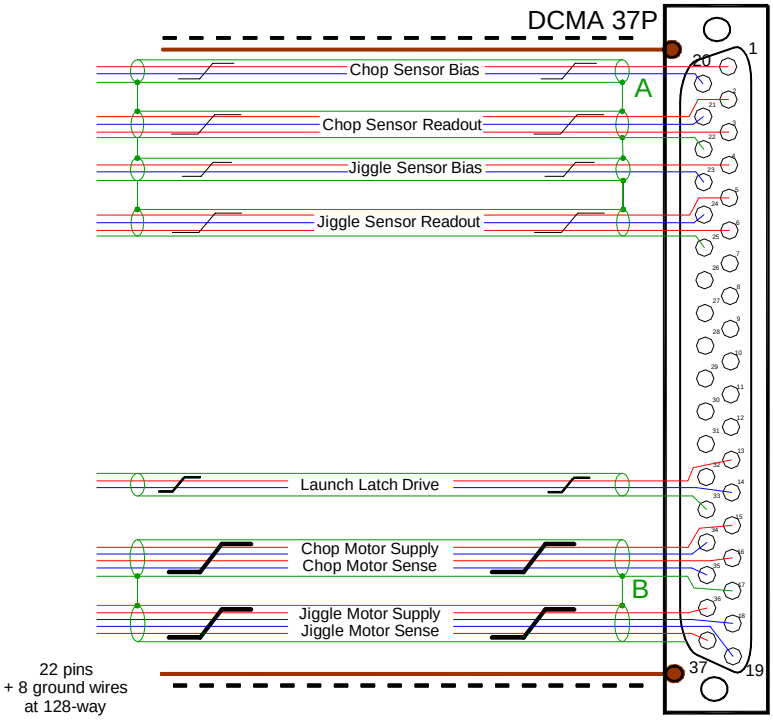

BSM Tail FCU P19

· 4 STP
· 2 STT
· 2 STQ

· The whole harness bundle is overlain with an RF screen Indicated by: ——— which is connected to EMC backshells at the WE and the wall of the CVV.

· The dotted lines indicate insulation jacket covering the overshield. Only required at clamp points but could cover entire length of harness.

· A and B represent the commoning of ground references within the connectors which pass through the 128-way CVV connector on single individual pins.

SMEC Launch Tail FCU J29

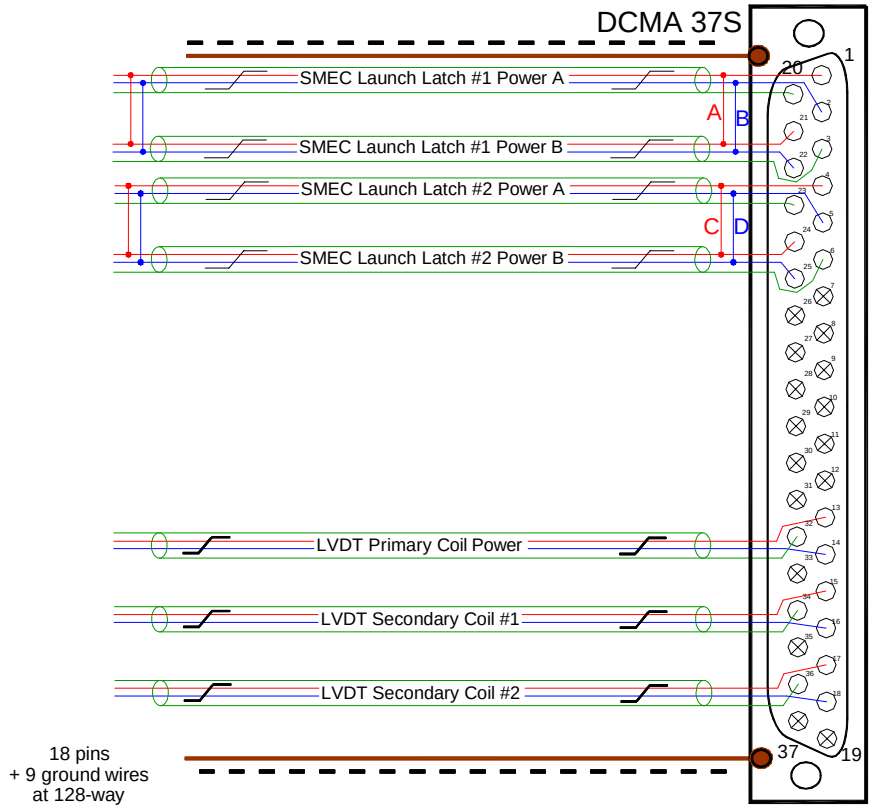

SMEC Launch Tail FCU P29/P30

· 7 STP

· The whole harness bundle is overlain with an RF screen Indicated by: ——— which is connected to EMC backshells at the WE and the wall of the CVV.

· The dotted lines indicate insulation jacket covering the overshield. Only required at clamp points but could cover entire length of harness.

· A, B, C and D represent the commoning of conductors in the harness.

Mechanism Launch Lock Confirm (SVM-CB JA)

Pin allocation TBD

SMEC Control (FCU P17)

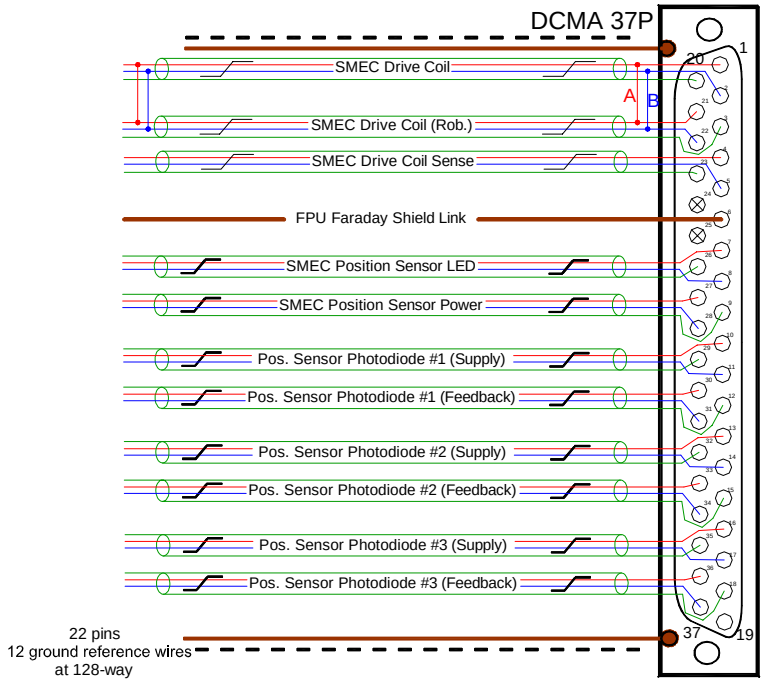

SMEC Control Tail FCU P17

· 11 STP
· 1 Single

· The whole harness bundle is overlain with an RF screen Indicated by: ——— which is connected to EMC backshells at the WE and the wall of the CVV.

· The dotted lines indicate insulation jacket covering the overshield. Only required at clamp points but could cover entire length of harness.

· A and B represent the commoning of conductors in the harness.

Thermometry C (FCU P21)

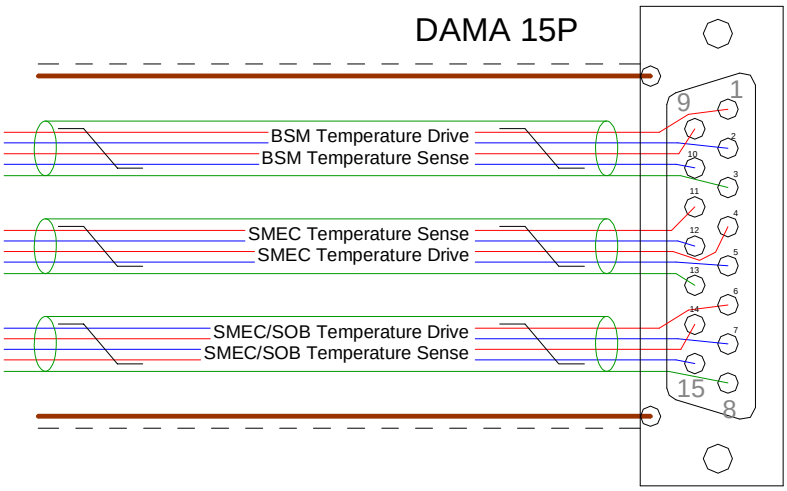

Thermometry Tail C (FCU P21/P22)

· The whole harness bundle is overlain with an RF screen Indicated by: ——— which is connected to EMC backshells at the Shutter and at the wall of the CVV.

· The dotted lines indicate insulation jacket covering the overshield. Only required at clamp points but could cover entire length of harness.

SVB-CB S11 128-Way Pin Allocation (View of wiring side of connector)

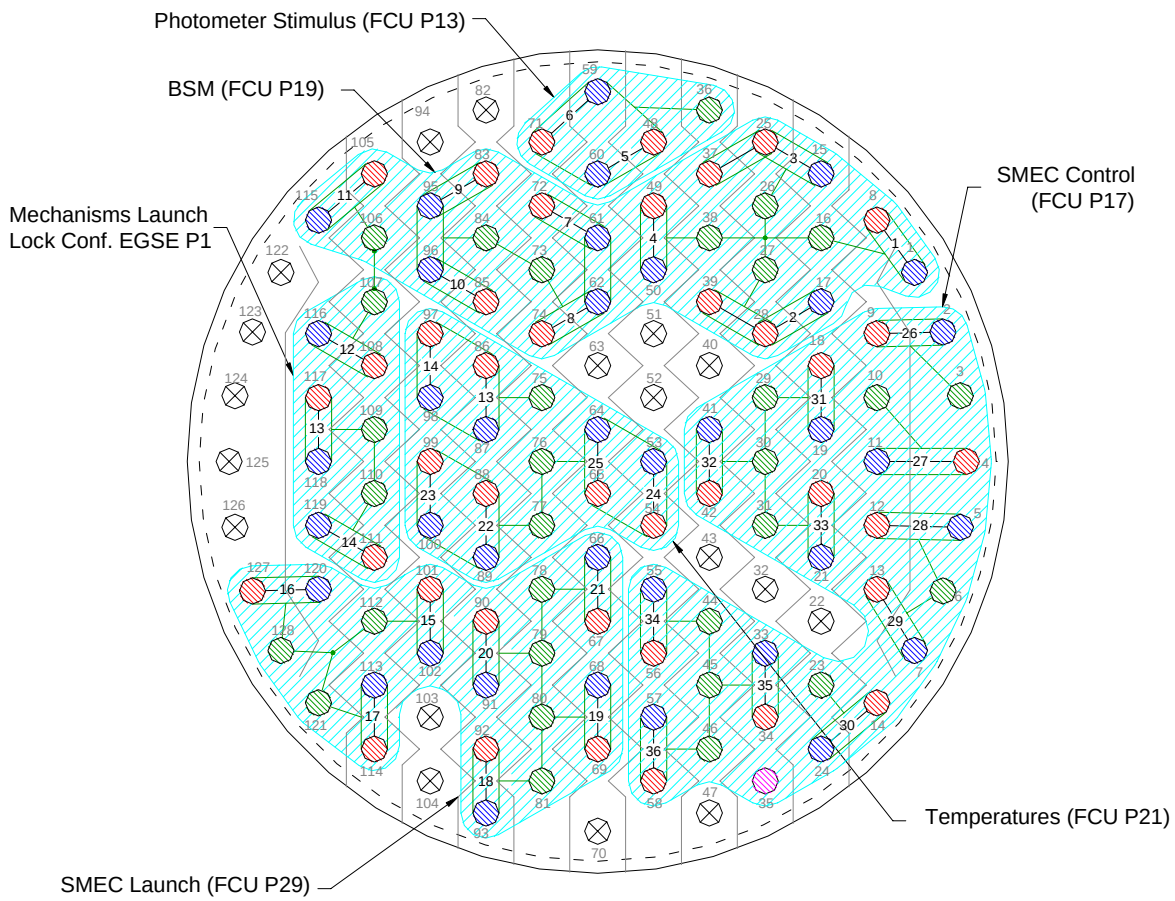

- Shields of STP are commoned as indicated by signal ground connections and passed through the 128-way by a dedicated ground pin.

- 110 of 128 Contacts Used

Bolometer Signal +
Bolometer Signal -
Signal Ground
FPU Faraday Shield Link
No Connection
Harness Tails
Harness Overshield (Joined to connector chassis)

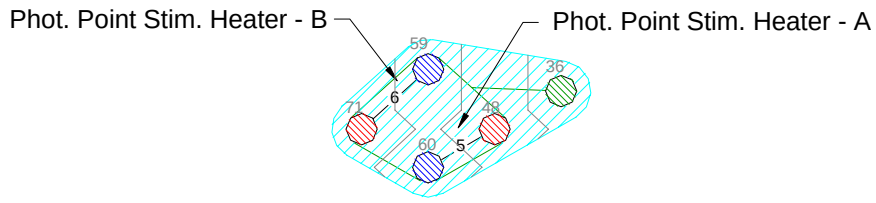

P-Cal (FCU P13)

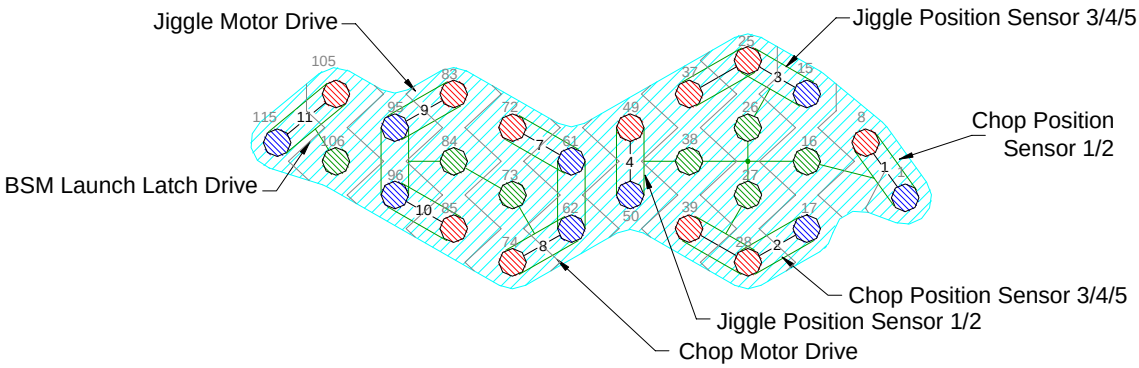

BSM (FCU P19)

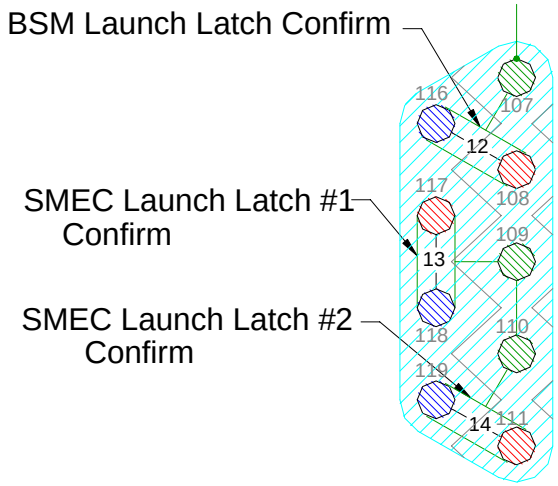

Mech. Launch Latch Confirm JB

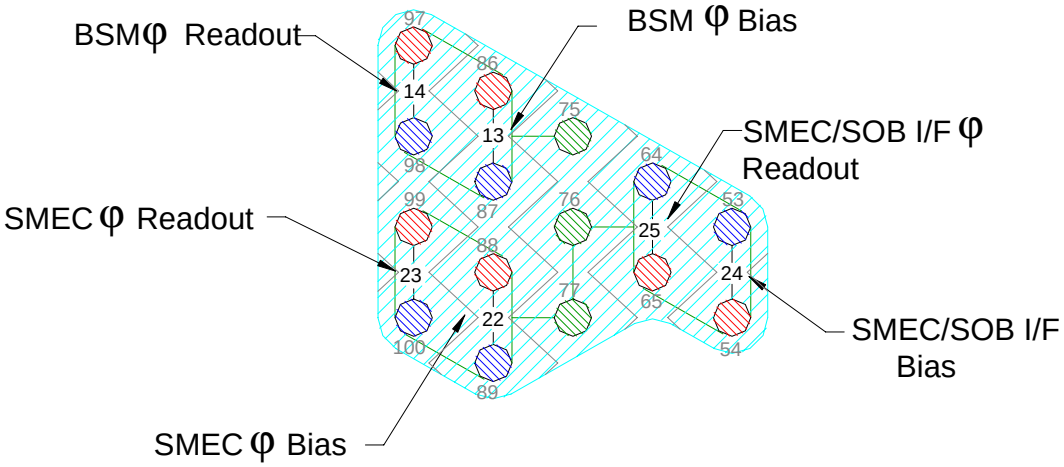

Thermometry Tail C (FCU P21)

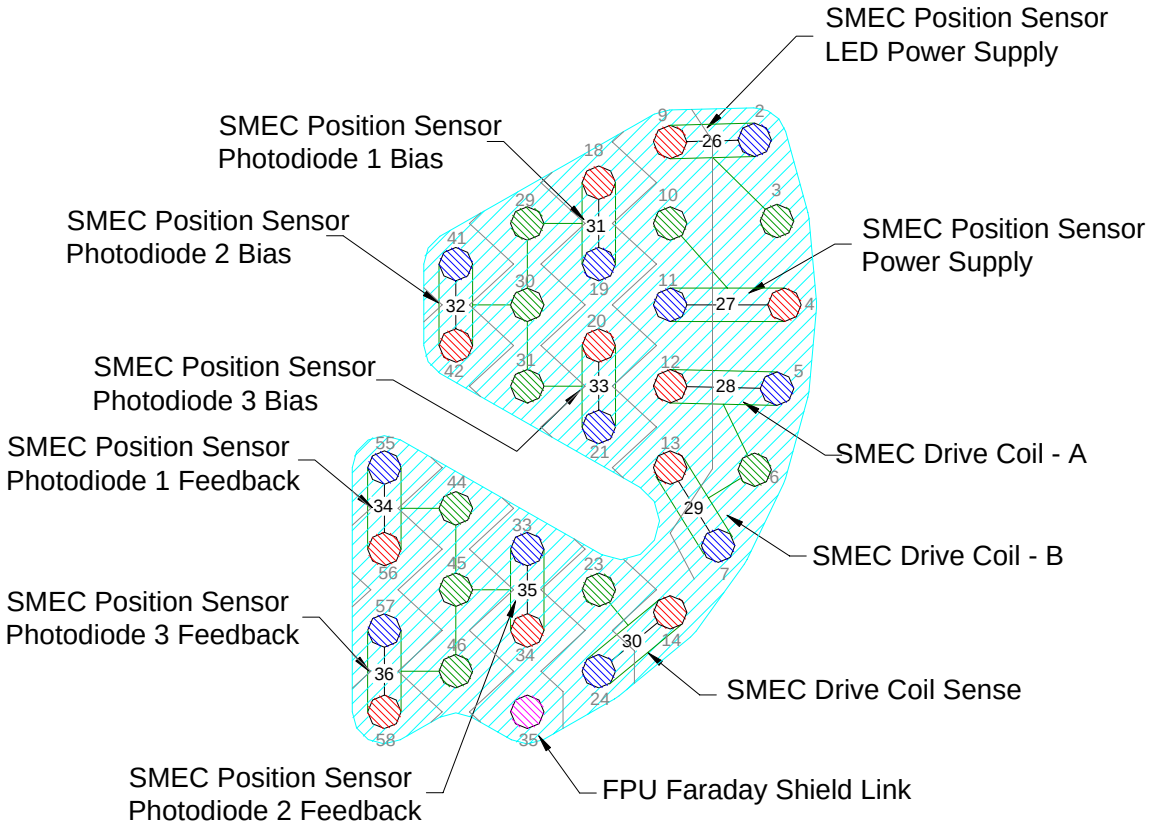

SMEC Control Tail (FCU P17)

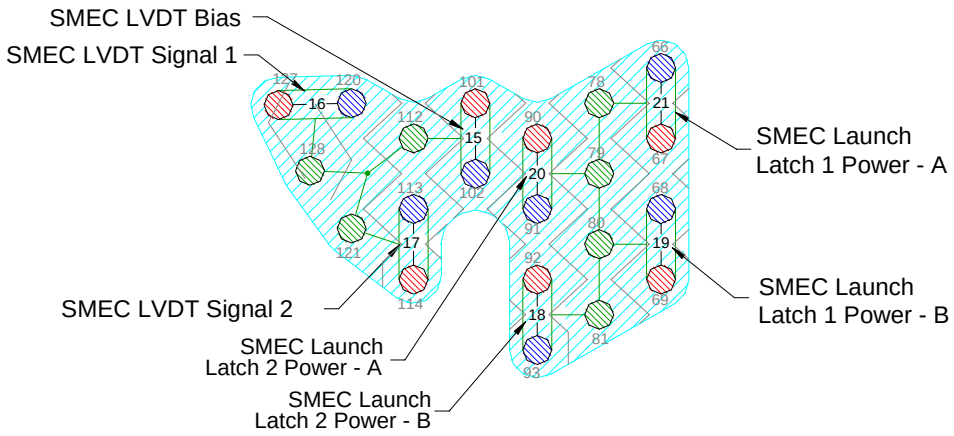

SMEC Launch Tail (FCU P29)

Temperature Tail Listing P21

Function	Signal Name	15way P21	Max. current	Wire lay-up	Max Ohms	128Way #11
BSM temperature I+	T_BSMM_1_D+	1	1 µA	Insulated screened twisted quad	1000	86
BSM temperature V+	T_BSMM_1_S+	9	N/A		1000	97
BSM temperature V-	T_BSMM_1_S-	10	N/A		1000	98
BSM temperature I-	T_BSMM_1_D-	2	1 µA		1000	87
BSM temperature shld	T_BSMM_1_SHD	3	N/A		N/A	75
SMEC temperature I+	T_FTSM_1_D+	4	1 µA	Insulated screened twisted quad	1000	88
SMEC temperature V+	T_FTSM_1_S+	11	N/A		1000	99
SMEC temperature V-	T_FTSM_1_S-	12	N/A		1000	100
SMEC temperature I-	T_FTSM_1_D-	5	1 µA		1000	89
SMEC temperature shld	T_FTSM_1_SHD	13	N/A		N/A	77
SMEC/SOB I/F temperature I+	T_FTSS_1_D+	6	1 µA	Insulated screened twisted quad	1000	54
SMEC/SOB I/F temperature V+	T_FTSS_1_S+	14	N/A		1000	65
SMEC/SOB I/F temperature V-	T_FTSS_1_S-	15	N/A		1000	64
SMEC/SOB I/F temperature I-	T_FTSS_1_D+	7	1 µA		1000	53
SMEC/SOB I/F temperature shld	T_FTSS_1_SHD	8	N/A		N/A	76
	Harness Overshield	EMC Backshell				

SMEC Control Tail Listing (FCU P17)

Function	Signal Name	37-Way P17	Max. Current	Wire Lay-up	Max Ohms	128Way #11
SMEC Drive Coil I+	S_Mot_Coil_P	1 (A)	100mA	Insulated screened twisted pair	5	12
SMEC Drive Coil I-	S_Mot_Coil_N	2 (B)	100mA		5	5
SMEC Drive Coil shld	S_Mot_Coil_Shd	20	N/A		N/A	6
SMEC Drive Coil (Rob) I+	S_Mot_Coil_P	21(A)	100mA	Insulated screened twisted pair	5	13
SMEC Drive Coil (Rob) I-	S_Mot_Coil_N	22 (B)	100mA		5	7
SMEC Drive Coil (Rob) shld	S_Mot_Coil_Shd	3	N/A		N/A	6
SMEC Drive Coil Sense+	S_Mot_Bemf_P	4	10 µA	Insulated screened twisted pair	500	14
SMEC Drive Coil Sense-	S_Mot_Bemf_N	5	10 µA		500	24
SMEC Drive Coil shld	S_Mot_Bemf_Shd	23	N/A		N/A	23
SMEC position sensor Led power supply	LEDA	7	1mA	Insulated screened twisted pair	100	9
SMEC position sensor Led power return	LEDC	8	1mA		100	2
SMEC position sensor Led power Shield	LED_Shd	26	N/A		N/A	3
SMEC position sensor power supply	+3V	27	1mA	Insulated screened twisted pair	100	4
SMEC position sensor power return	-3V	28	1mA		100	11
SMEC position sensor power Shield	POS_POWER_Shd	9	N/A		N/A	10
SMEC position sensor photodiode #1 I+	IPD1A	10	20 µA	Insulated screened twisted pair	1000	18
SMEC position sensor photodiode #1 I-	IPD1C	11	20 µA		1000	19
SMEC position sensor photodiode Shield	IPD1_SHD	29	N/A		N/A	29
SMEC pos. sensor photodiode #1 feedback +	CRPD1A	30	10 µA	Insulated screened twisted pair	1000	56
SMEC pos. sensor photodiode #1 feedback -	CRPD1C	31	10 µA		1000	55
SMEC pos. sensor photodiode feedback Shld	CRPD1_SHD	12	N/A		N/A	44
SMEC position sensor photodiode #2 I+	IPD2A	13	20 µA	Insulated screened twisted pair	1000	42
SMEC position sensor photodiode #2 I-	IPD2C	14	20 µA		1000	41
SMEC position sensor photodiode Shield	IPD2_Shd	32	N/A		N/A	30
SMEC pos. sensor photodiode #2 feedback +	CRPD2A	33	10 µA	Insulated screened twisted pair	1000	34
SMEC pos. sensor photodiode #2 feedback -	CRPD2C	34	10 µA		1000	33
SMEC pos. sensor photodiode feedback Shld	CRPD2_Shd	15	N/A		N/A	45
SMEC position sensor photodiode #3 I+	IPD3A	16	20 µA	Insulated screened twisted pair	1000	20
SMEC position sensor photodiode #3 I-	IPD3C	17	20 µA		1000	21
SMEC position sensor photodiode Shield	IPD3_Shd	35	N/A		N/A	31
SMEC pos. sensor photodiode #3 feedback +	CRPD3A	36	10 µA	Insulated screened twisted pair	1000	58
SMEC pos. sensor photodiode #3 feedback -	CRPD3C	37	10 µA		1000	57
SMEC pos. sensor photodiode feedback Shld	CRPD3_Shd	18	N/A		N/A	46
FPU Faraday Shield Link		6	N/A	Single Wire	50	35
Harness Overshield		EMC Backshell				

Photometer Stimulus Heater P13

Function	P13	Max. Current	Wire Lay-up	MaxOhms	128Way #11
Photometer Point Stim. Heater I+_A	2	7 mA	Screened twisted quad	10	48
Photometer Point Stim.Heater I+_B	3	7 mA		10	71
Photometer Point Stim.Heater I-_A	7	7 mA		10	60
Photometer Point Stim.Heater I-_B	8	7 mA		10	59
Screen	4				36
Harness Overshield	EMC Backshell				

4 pins used

SMEC Launch Tail Listing (FCU P29)

The Ground Test Configuration of this tail contains the SMEC Launch Latch confirmation signals. These conductors are not present in the flight version of this tail. These conductors are shown as hatched in this table.

Function	Signal Name	37-Way P29	Max. Current	Wire lay-up	Max Ohms	128Way #11
SMEC launch latch #1 power supply A	S_LL#1_Coil_P	1	400 mA / 50ms	Insulated screened twisted pai	5	67
SMEC launch latch #1 power return A	S_LL#1_Coil_N	2	400 mA / 50ms		5	66
SMEC launch latch #1 power Shield A	S_LL#1_Coil_ Shd	20	N/A		N/A	78
SMEC launch latch #1 power supply B		21	400 mA / 50ms	Insulated screened twisted pai	5	69
SMEC launch latch #1 power return B		22	400 mA / 50ms		5	68
SMEC launch latch #1 power Shield B		3	N/A		N/A	80
SMEC launch latch #2 power supply A		4	400 mA / 50ms	Insulated screened twisted pair	5	90
SMEC launch latch #2 power return A		5	400 mA / 50ms		5	91
SMEC launch latch #2 power Shield A		3	N/A		N/A	79
SMEC launch latch #2 power supply B	S_LL#2_Coil_P	24	400 mA / 50ms	Insulated screened twisted pair	5	92
SMEC launch latch #2 power return B	S_LL#2_Coil_N	25	400 mA / 50ms		5	93
SMEC launch latch #2 power Shield B	S_LL#2_Coil_ Shd	6	N/A		N/A	81
SMEC LVDT primary coil power supply (P)	LVDT_PRIM_P	13	5 mA	Insulated screened twisted pair	5	101
SMEC LVDT primary coil power supply (N)	LVDT_PRIM_N	14	5 mA		5	102
SMEC LVDT primary coil power supply Shld	LVDT_PRIM_ Shd	32	N/A		N/A	112
SMEC LVDT secondary coil # 1signal (P)	LVDT_SECA_P	15	50 µA	Insulated screened twisted pair	5	127
SMEC LVDT secondary coil # 1 signal (N)	LVDT_SECA_N	16	50 µA		5	120
SMEC LVDT secondary coil # 1 signal Shield	LVDT_SECA_ Shd	34	N/A		N/A	128
SMEC LVDT secondary coil # 2 signal (P)	LVDT_SECB_P	17	50 µA	Insulated screened	5	114
SMEC LVDT secondary coil # 2 signal (N)	LVDT_SECB_N	18	50 µA		5	113

SMEC LVDT secondary coil # 2 signal Shield	LVDT_SECB_ Shd	36	N/A	twisted pair	N/A	121
Harness Overshield		EMC Backshell				

BSM Tail Listing (FCU P19)

Function		**37way P19**	**Max. Current**	**Wire Lay-up**	**Max Ohms**	**128Way #11**
Chop Position Sensor 1	Ch_Sens_Sup	1	1 mA	Insulated screened twisted pair	1000	8
Chop Position Sensor 2	Ch_Sens_Rtn	20	1 mA		1000	1
Chop Position Sensor shld1	Ch_Sens_Shd1	22 (A)	N/A		N/A	16 (A)
Chop Position Sensor 3	Ch_Sens_Sup_Meas	2	250 nA	Insulated screened twisted triple	1000	39
Chop Position Sensor 4	Ch_Sens_O/P	21	N/A		1000	28
Chop Position Sensor 5	Ch_Sens_Rtn_Meas	3	N/A		1000	17
Chop Position Sensor shld2~~=A~~	Ch_Sens_Shd1	22 (A)	N/A		N/A	27 (A)
Jiggle Position Sensor 1	Jig_Sens_Sup	4	1 mA	Insulated screened twisted pair	1000	49
Jiggle Position Sensor 2	Jig_Sens_Ret	23	1 mA		1000	50
Jiggle Position Sensor shld1	Ch_Sens_Shd1	22 (A)	N/A		N/A	38 (A)
Jiggle Position Sensor 3	Jig_Sens_Sup_Meas	5	250 nA	Insulated screened twisted triple	1000	15
Jiggle Position Sensor 4	Jig_Sens_O/P	24	N/A		1000	25
Jiggle Position Sensor 5	Jig_Sens_Rtn_Meas	6	N/A		1000	37
Jiggle Position Sensor shld2~~=B~~	Ch_Sens_Shd1	22 (A)	N/A		N/A	26 (A)
BSM Launch latch drive +	B_LL_Sup	13	35mA	Insulated screened twisted pair	10	105
BSM Launch latch drive -	B_LL_Rtn	14	35mA		10	115
BSM Launch latch drive shld	LL_Shd	33	N/A		N/A	106
Chop Motor Drive 1	Ch_Mot_Sup	15	40 mA	Insulated screened twisted quad	10	72
Chop Motor Drive 2	Ch_Mot_Rtn	34	40 mA		10	61
Chop Motor Drive 3	Ch_Bemf_Meas_P	16	40 mA		10	62
Chop Motor Drive 4	Ch_Bemf_Meas_N	35	40 mA		10	74
Chop Motor Drive shld	Ch_Mot_Shd	17 (B)	N/A		N/A	73 (B)
Jiggle Motor Drive 1	Jig_Mot_Sup	36	40 mA	Insulated screened twisted quad	10	83
Jiggle Motor Drive 2	Jig_Mot_Rtn	18	40 mA		10	95
Jiggle Motor Drive 3	Jig_Bemf_Meas_P	37	40 mA		10	96
Jiggle Motor Drive 4	Jig_Bemf_Meas_N	19	40 mA		10	85
Jiggle Motor Drive shld	Ch_Mot_Shd	17 (B)	N/A		N/A	83 (B)
Harness Overshield		EMC Backshell				

Function	JB	Max. Current	Wire Lay-up	128Way #11
BSM Launch Latch Confirm +	TBD	1 mA	Insulated screened twisted pair	108
BSM Launch Latch Confirm -	TBD	1 mA		116
BSM Launch Latch Ground Shield	TBD	N/A		107
SMEC Launch Latch #1 Confirm +	TBD	1 mA	Insulated screened twisteed pair	117
SMEC Launch Latch #1 Confirm -	TBD	1 mA		118
SMEC Launch Latch #1 Ground Shield	TBD	N/A		109 (A)
SMEC Launch Latch #2 Confirm +	TBD	1mA	Insulated screened twisted pair	111
SMEC Launch Latch #2 Confirm -	TBD	1mA		119
SMEC Launch Latch #2 Ground Shield	TBD	N/A		110 (A)
Harness Overshield	EMC Backshell			

4.2.12 S12 SVM-CB 12 – DCU AUX-R

Overall Mechanical Drawing

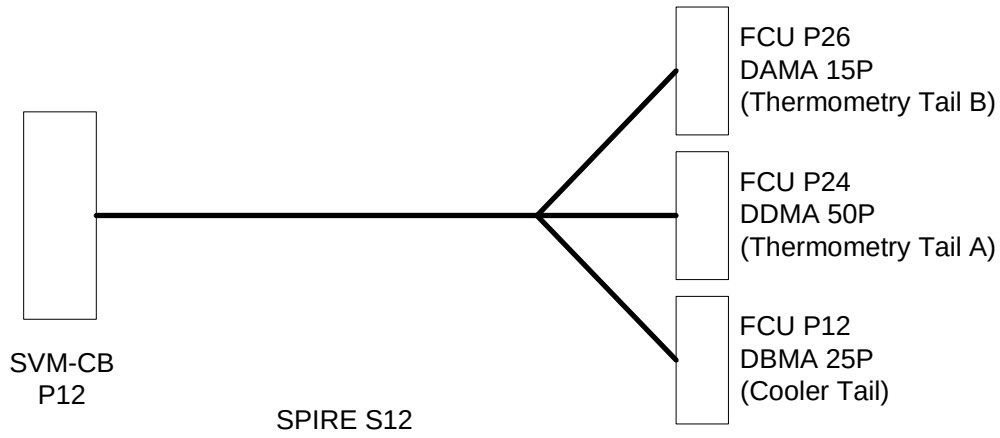

Redundant version of I10, and the same as it

Connector/Backshell Details

Prime side harness

DBMA 25 P + Glenair 559 - E - 359 - M - 3 to	FCU J12	Heater Tail (Red)
DDMA 50 P + Glenair 559 - E - 359 - M - 5 to	FCU J24	FPU Thermometry Tail A (Red.)
DAMA 15 P + Glenair 559 - E - 359 - M - 2 to	FCU J26	FPU Thermometry Tail B (Red.)

Harness Layup

As I10

4.2.13 S13 SVM-CB 13 – DCU DRV-R

Overall Mechanical Drawing

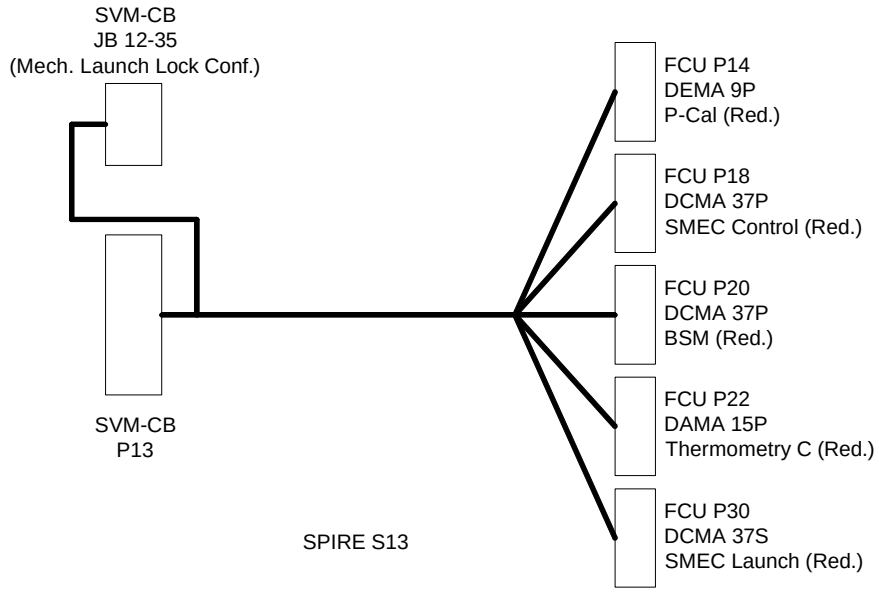

Format as I11

Connector/Backshell Details

Redundant Side

DEMA 9 P +	Glenair	557	- T - 357	-	M	-	1	to	FCU J14	P-Cal (Red.)
DCMA 37 P +	Glenair	557	- E - 359	-	M	-	4	to	FCU J18	SMEC Control Module (Red.)
DCMA 37 P +	Glenair	557	- E - 359	-	M	-	4	to	FCU J20	BSM Module (Red.)
DAMA 15 P +	Glenair	557	- E - 359	-	M	-	2	to	FCU J22	Thermometry Tail C (Red.)
DCMA 37 S +	Glenair	557	- T - 357	-	M	-	4	to	FCU J30	SMEC Launch (Red.)
MS27497T 12F35P + EMI Backshell								to	(PB) Mechanisms Launch Lock Conf. (Red.)	

Harness Layup

As I11.

Contact Details

As I11

4.3 External Harnesses

These harnesses make the thermal jump between the SVM and the CVV wall. The overshields on the individual harnesses are connected to the SVM chassis and CVV chassis via the connector backshells.

4.3.1 I1 SVM-CB 1 – CVV1

Overall Mechanical Drawing

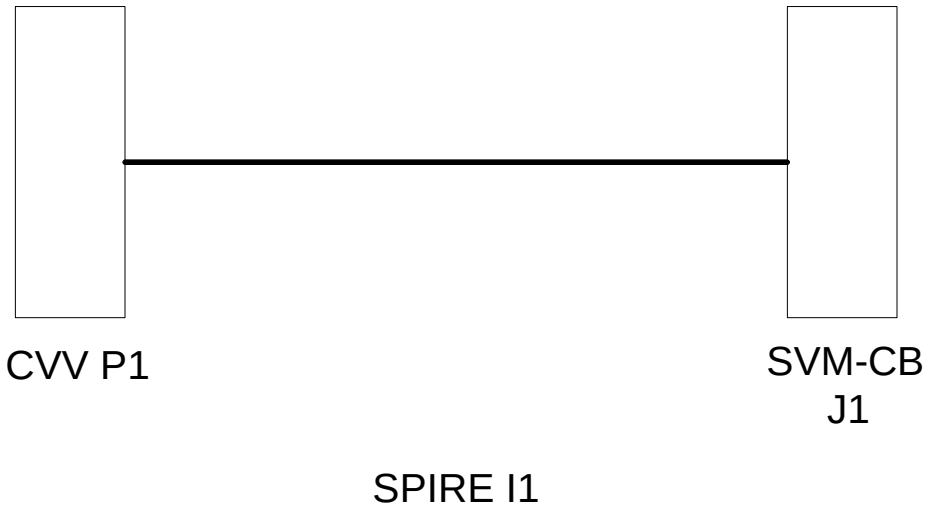

Connector/Backshell Details

128-Way connectors at either end + TBD EMC Backshells.

Harness Layup

As per S1 – SVM Panel end

TBD Overshield

Contact Details

As per 128-way connector on S1

4.3.2 I2 SVM-CB 2 – CVV2

Overall Mechanical Drawing

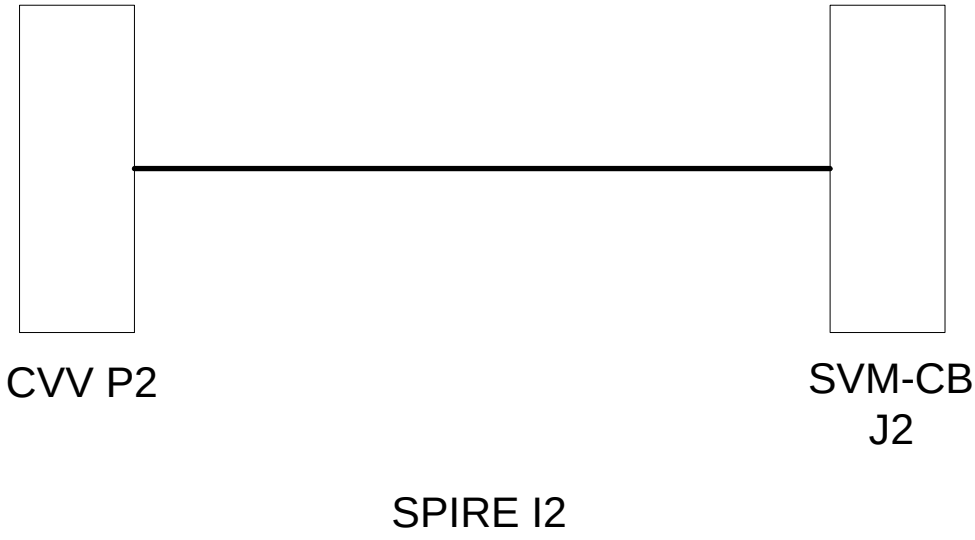

Connector/Backshell Details

128-Way connectors at either end + TBD EMC Backshells.

Harness Layup

As per S2

Contact Details

As per 128-way connector on S2

4.3.3 I3 SVM-CB 3 – CVV 3

Overall Mechanical Drawing

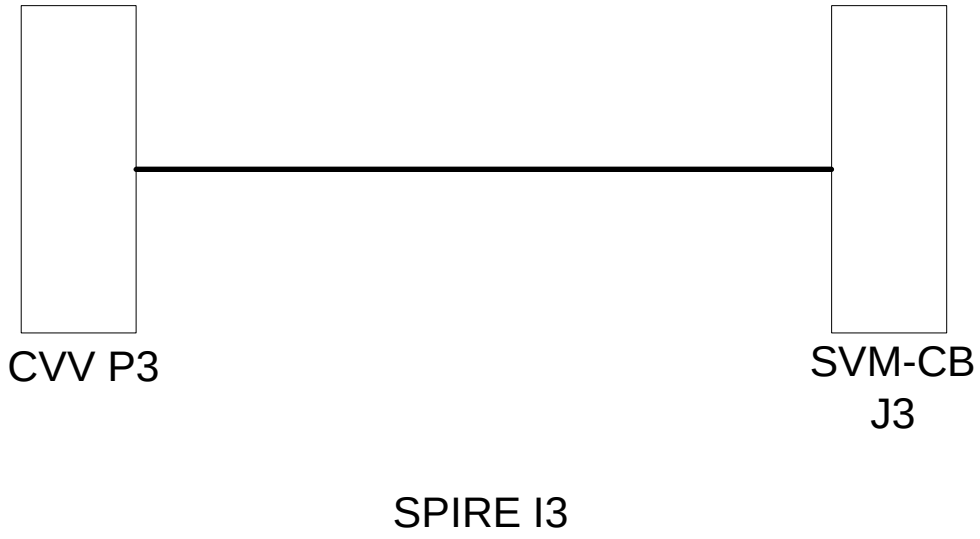

Connector/Backshell Details

128-Way connectors at either end + TBD EMC Backshells.

Harness Layup

As per S3

Contact Details

As per 128-way connector on S3

4.3.4 I4 SVM-CB 4 – CVV 4

Overall Mechanical Drawing

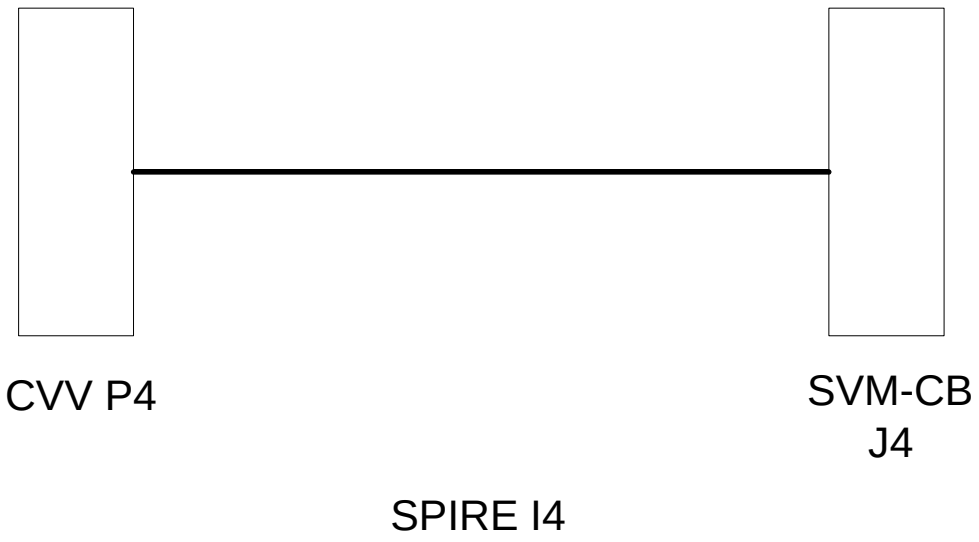

Connector/Backshell Details

128-Way connectors at either end + TBD EMC Backshells.

Harness Layup

As per S4

Contact Details

As per 128-way connector on S4

4.3.5 I5 SVM-CB 5 – CVV 5

Overall Mechanical Drawing

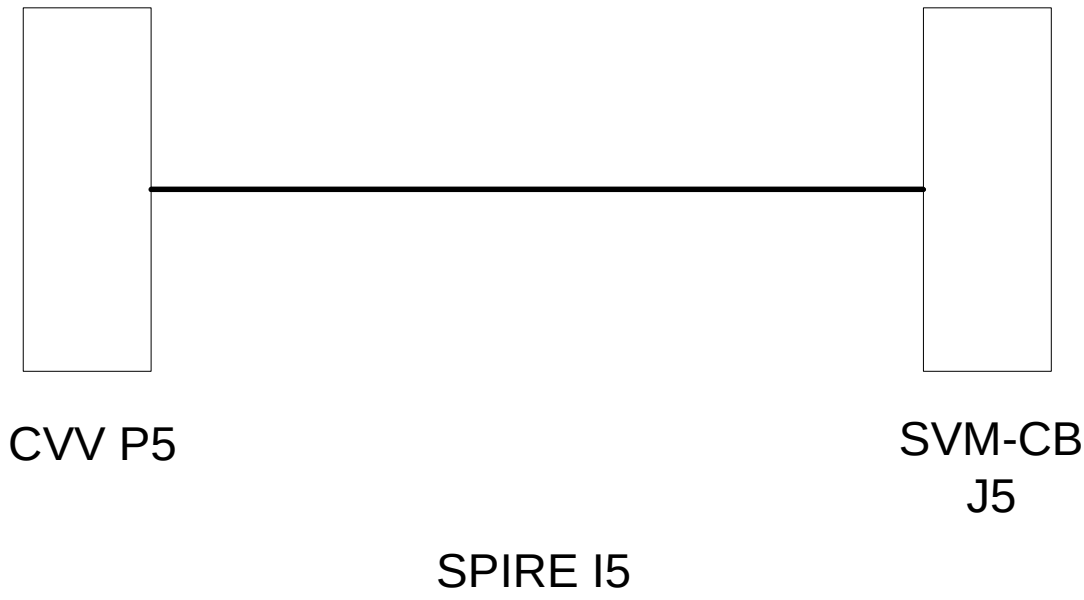

Connector/Backshell Details

128-Way connectors at either end + TBD EMC Backshells.

Harness Layup

As per S5

Contact Details

As per 128-way connector on S5

4.3.6 I6 SVM-CB 6 – CVV 6

Overall Mechanical Drawing

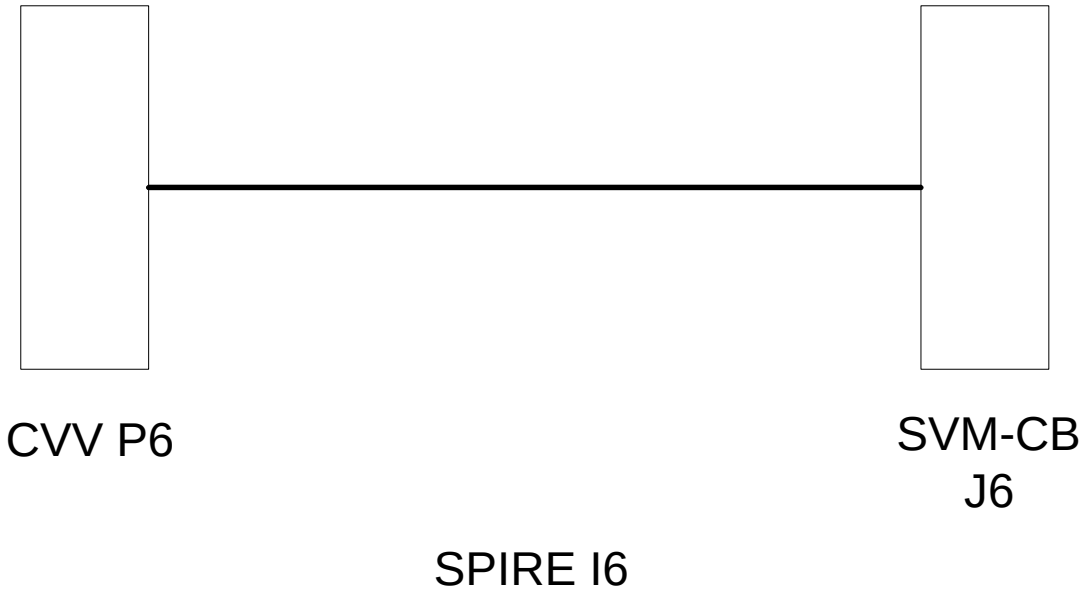

Connector/Backshell Details

128-Way connectors at either end + TBD EMC Backshells.

Harness Layup

As per S6

Contact Details

As per 128-way connector on S6

4.3.7 I7 SVM-CB 7 – CVV 7

Overall Mechanical Drawing

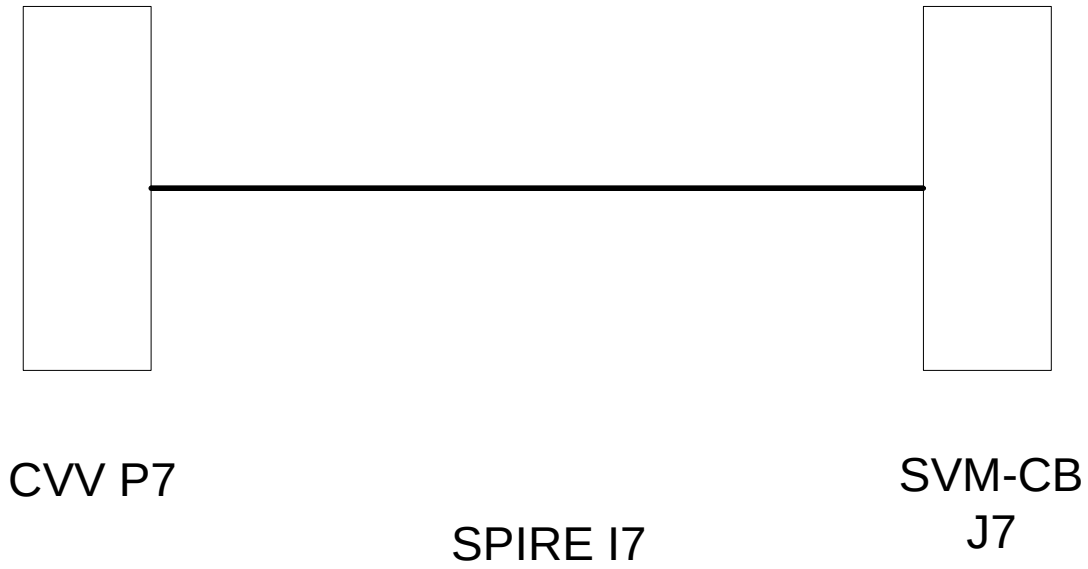

Connector/Backshell Details

128-Way connectors at either end + TBD EMC Backshells.

Harness Layup

As per S7

Contact Details

As per 128-way connector on S7

4.3.8 I8 SVM-CB 8 – CVV 8

Overall Mechanical Drawing

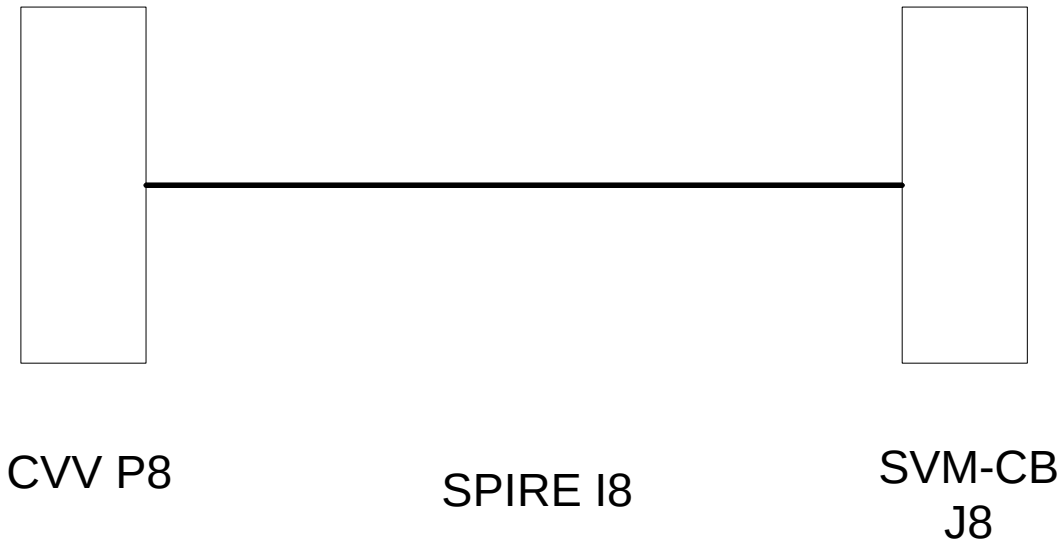

Connector/Backshell Details

128-Way connectors at either end + TBD EMC Backshells.

Harness Layup

As per S8

Contact Details

As per 128-way connector on S8

4.3.9 I9 SVM-CB 9 – CVV 9

Overall Mechanical Drawing

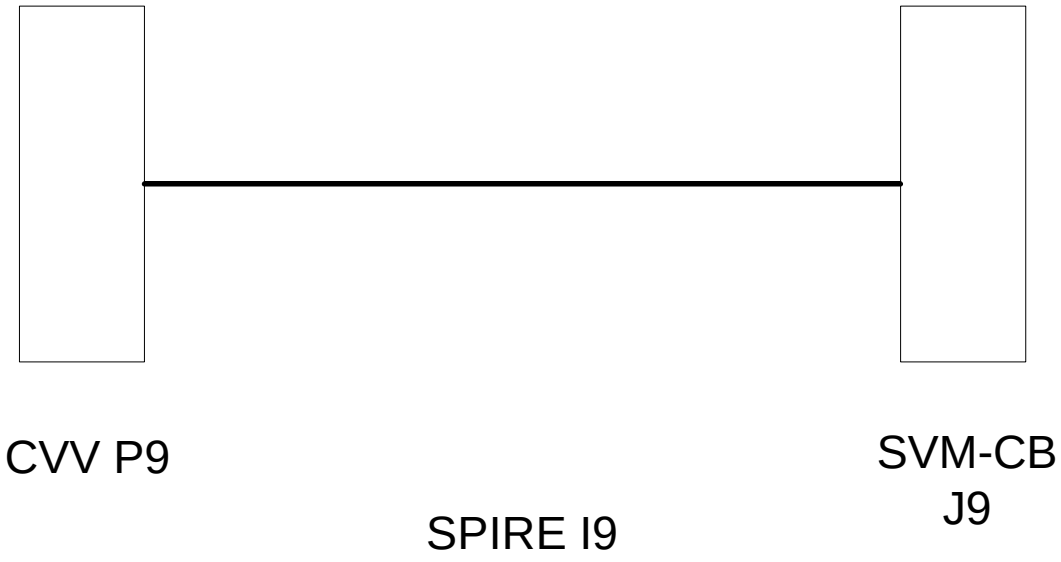

Connector/Backshell Details

128-Way connectors at either end + TBD EMC Backshells.

Harness Layup

As per S9

Contact Details

As per 128-way connector on S9

4.3.10 I10 SVM-CB 10 – CVV 10

Overall Mechanical Drawing

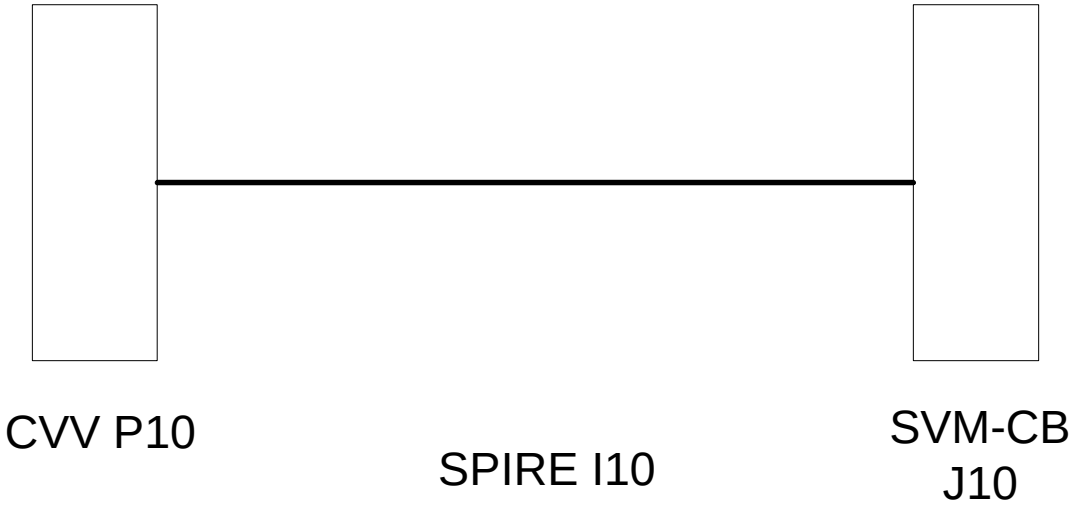

Connector/Backshell Details

128-Way connectors at either end + TBD EMC Backshells.

Harness Layup

As per S10

Contact Details

As per 128-way connector on S10

4.3.11 I11 SVM-CB 11 – CVV 11

Overall Mechanical Drawing

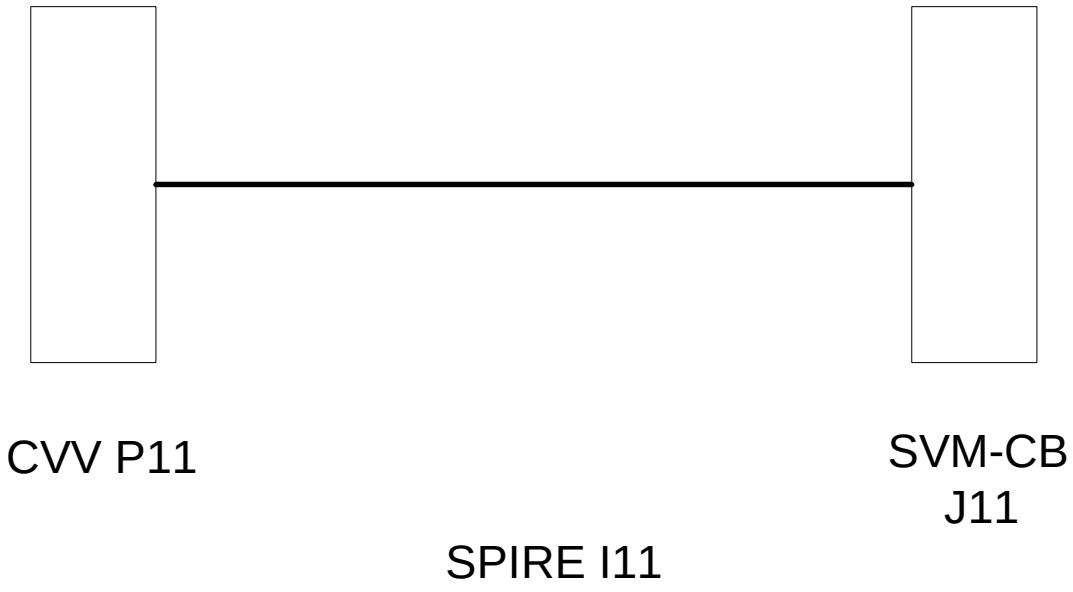

Connector/Backshell Details

128-Way connectors at either end + TBD EMC Backshells.

Harness Layup

As per S11

Contact Details

As per 128-way connector on S11

4.3.12 I12 SVM-CB 12 – CVV 12

Overall Mechanical Drawing

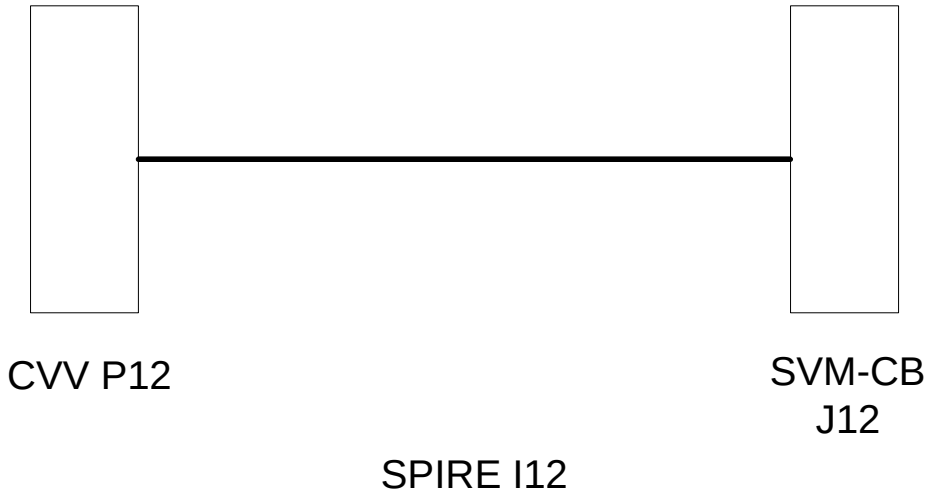

Connector/Backshell Details

As per I10

Harness Layup

As per I10

Contact Details

As per I10

4.3.13 I13 SVM-CB 13 – CVV 13

Overall Mechanical Drawing

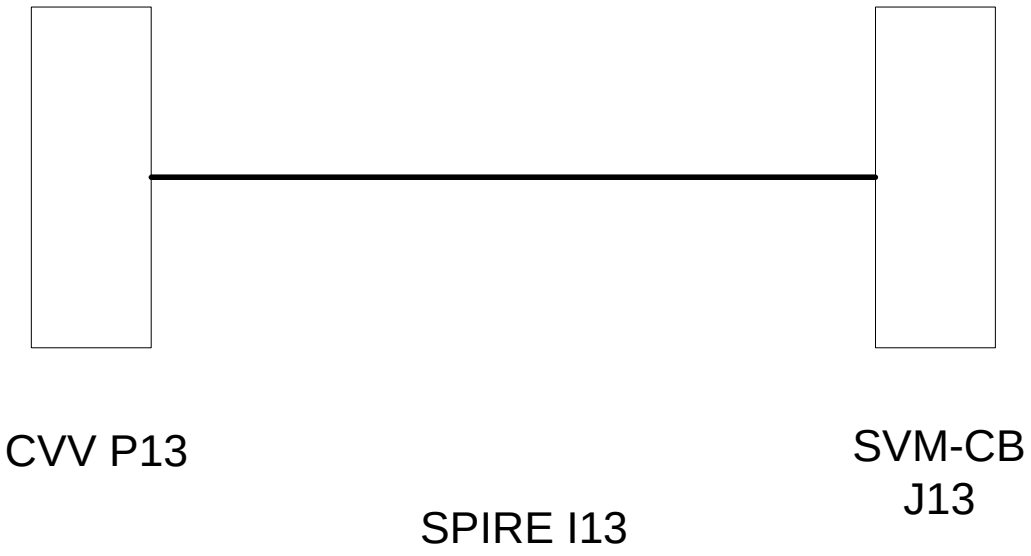

Connector/Backshell Details

As per I11

Harness Layup

As per S11

Contact Details

As per S11

4.4 Cryogenic Harnesses

4.4.1 C1 CVV1 to HSJFS Type3

Overall Mechanical Drawing

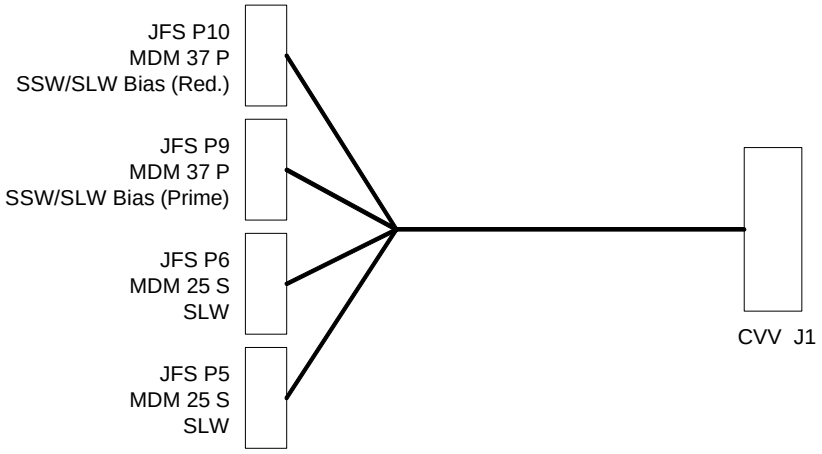

SPIRE C1

Connector/Backshell Details:

MDM	25	S	+	Glenair	507	-	T	- 196	-	M	-	25	to	JFS J5	SLW JFET
MDM	25	S	+	Glenair	507	-	T	- 196	-	M	-	25	to	JFS J6	SLW JFET
MDM	37	P	+	Glenair	507	-	T	- 196	-	M	-	37	to	JFS J9	Spect. Bias
MDM	37	P	+	Glenair	507	-	T	- 196	-	M	-	37	to	JFS J10	Spect. Bias

Harness Layup

Two 25way JFET bolometer tails, each as those in C4.
Two 37 way Spectrometer JFET Filter tails, each as follows:

Type 3 Bias Tails
JFS P9/P10

· 13 Insulated STPs
· 3 Single insulated ground wires
· Note SLW and SSW Ground Separation

· The whole harness bundle is overlain with an RF screen Indicated by: ——— which is connected to EMC backshells at JFS but isolated from the wall of the CVV.

· The dotted lines indicate insulation jacket covering the overshield. Only required at clamp points but could cover entire length of harness.

· A, B, C and D represent the commoning of ground references within the connectors which pass through the 128-way CVV connector on single individual pins.

· Harness connector is a **Plug**. Drawing indicates pin allocation as seen from the rear, non-engaging face of the connector.

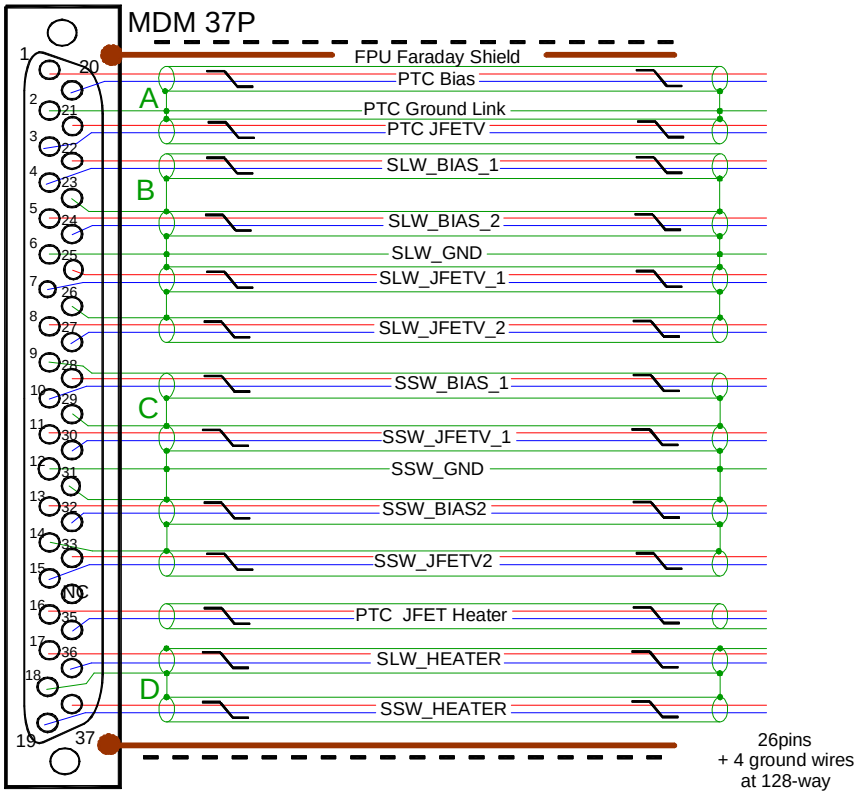

Because the small SLW has no subgroups that might fail, EACH of the JFET backharness leads are double-wired in this cryoharness, requiring links across in the filters.

CVV C1 128-Way Pin Allocations (View of wiring side of connector)

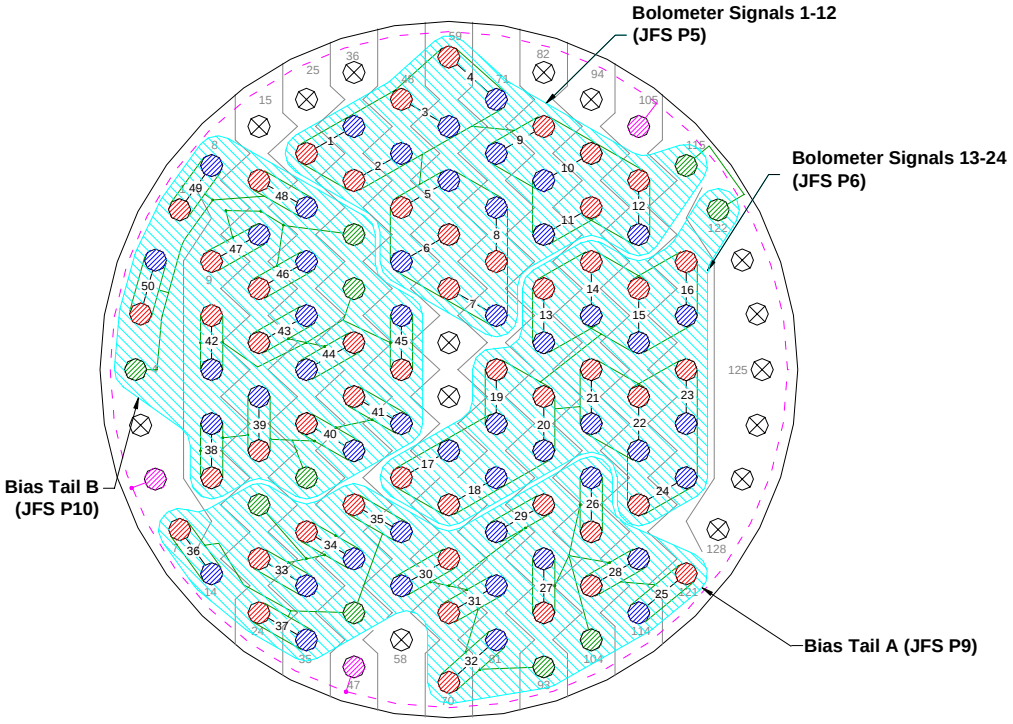

Overshields of the 12-ax and STP are commoned as indicated by signal ground connections and passed through the 128-way by dedicated ground pins.

- Bolometer Signal +
- Bolometer Signal -
- Signal Ground
- FPU Faraday Shield Link
- No Connection
- Harness Tails
- Harness Overshield (Joined to FPU Faraday Shield Link Pins and isolated from connector chassis)
- Signal Ground Connection

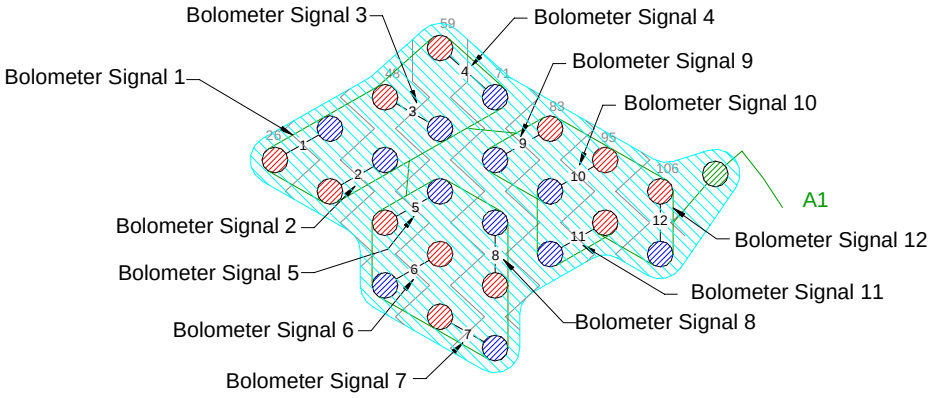

Bolometer Signals 1-12
(JFS P5)

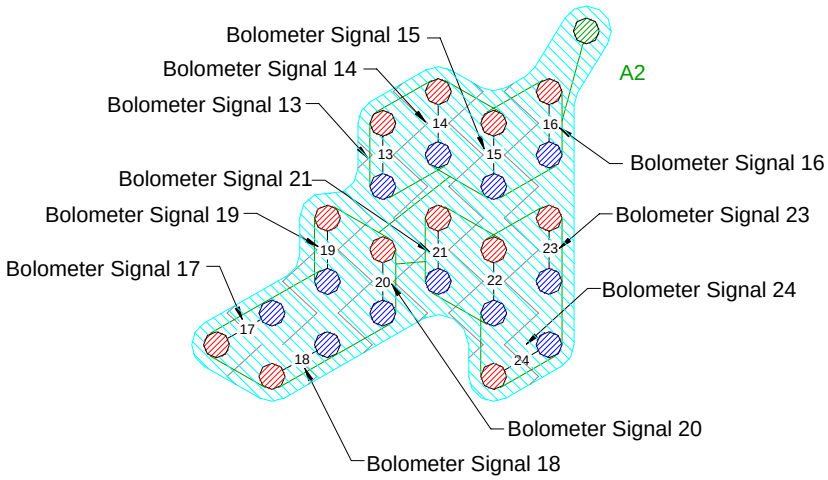

Bolometer Signals 13-24
(JFS P6)

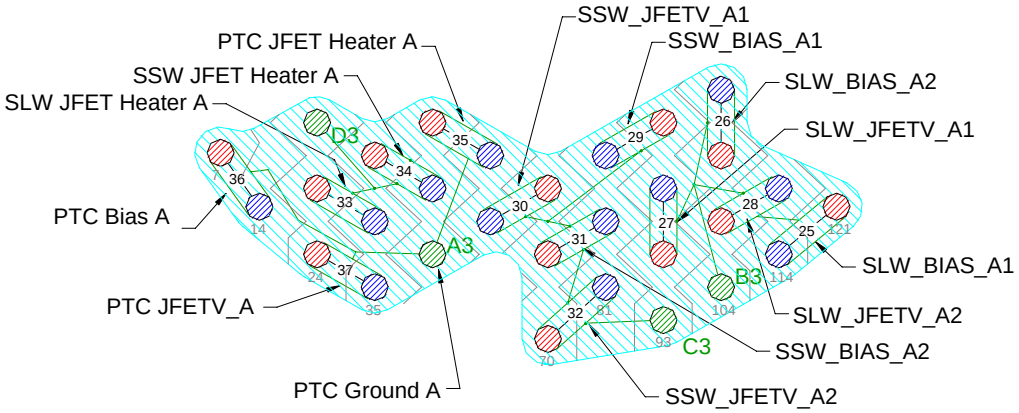

Bias Tail A
(JFS P9)

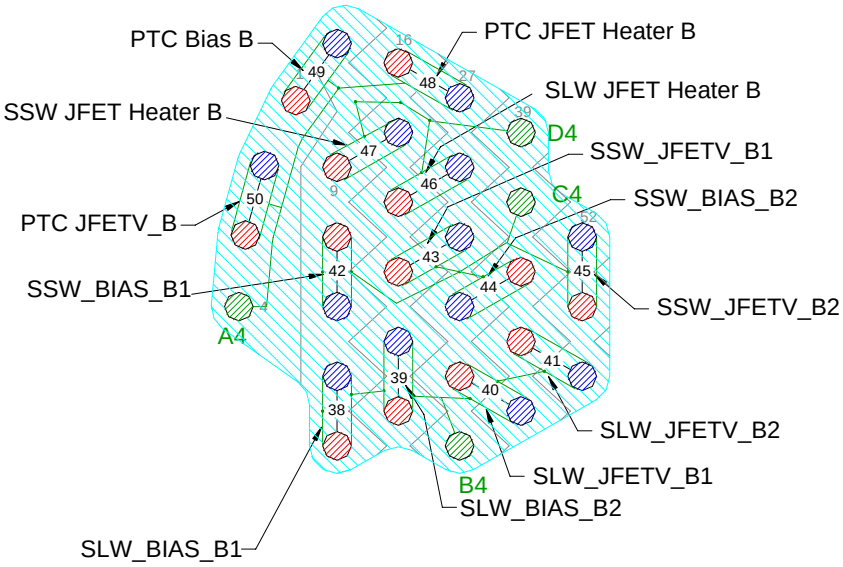

Bias Tail B
(JFS P10)

Contact details

	Name	25-Way A P5	25-Way B P6	37-Way C P9	37-Way D P10	CVV 128-Way #1
12-ax	Channel 1 +	13 (A)				26
	Channel 1 -	14				37
	Channel 1gnd shld	13 (A)				115 (A1)
	Channel 2 +	2				38
	Channel 2 -	15				49
	Channel 2gnd shld	13 (A)				115 (A1)
	Channel 3 +	3				48
	Channel 3 -	16				60
	Channel 3gnd shld	13 (A)				115 (A1)
	Channel 4 +	4				59
	Channel 4 -	17				71
	Channel 4gnd shld	13 (A)				115 (A1)
12-ax	Channel 5 +	5				50
	Channel 5 -	18				61
	Channel 5gnd shld	13 (A)				115 (A1)
	Channel 6 +	6				62
	Channel 6 -	19				51
	Channel 6gnd shld	13 (A)				115 (A1)
	Channel 7 +	20				63
	Channel 7 -	7				75
	Channel 7gnd shld	13 (A)				115 (A1)
	Channel 8 +	21				74
	Channel 8 -	8				73
	Channel 8gnd shld	13 (A)				115 (A1)
12-ax	Channel 9 +	22				83
	Channel 9 -	9				72
	Channel 9gnd shld	13 (A)				115 (A1)
	Channel 10 +	23				95
	Channel 10 -	10				84
	Channel 10gnd shld	13 (A)				115 (A1)
	Channel 11 +	24				96
	Channel 11 -	11				85
	Channel 11gnd shld	13 (A)				115 (A1)
	Channel 12 +	25				106
	Channel 12 -	12				107
	Channel 12gnd shld	13 (A)				115 (A1
12-ax	Channel 13 +		1			86
	Channel 13 -		14			87
	Channel 1gnd shld		13 (A)			122 (A2)
	Channel 14 +		2			97
	Channel 14 -		15			98
	Channel 1gnd shld		13 (A)			122 (A2)
	Channel 15 +		3			108
	Channel 15 -		16			109
	Channel 15gnd shld		13 (A)			122 (A2)
	Channel 16 +		4			116
	Channel 16 -		17			117
	Channel 16gnd shld		13 (A)			122 (A2)
12-ax	Channel 17 +		5			55
	Channel 17 -		18			66
	Channel 17gnd shld		13 (A)			122 (A2)
	Channel 18 +		6			67
	Channel 18 -		19			78
	Channel 18gnd shld		13 (A)			122 (A2)
	Channel 19 +		20			76
	Channel 19 -		7			77
	Channel 19 gnd shld		13 (A)			122 (A2)

	Name	25-Way A P5	25-Way B P6	37-Way C P9	37-Way D P10	CVV 128-Way #1
	Channel 20 +		21			88
	Channel 20 -		8			89
	Channel 20 gnd shld		13 (A)			122 (A2)
12-ax	Channel 21 +		22			99
	Channel 21 -		9			100
	Channel 21gnd shld		13 (A)			122 (A2)
	Channel 22 +		23			110
	Channel 22 -		10			111
	Channel 22gnd shld		13 (A)			122 (A2)
	Channel 23 +		24			118
	Channel 23 -		11			119
	Channel 23gnd shld		13 (A)			122 (A2)
	Channel 24 +		25			112
	Channel 24 -		12			120
	Channel 24gnd shld		13 (A)			122 (A2
STP	PTC Bias_A +ve			1		7
	PTC Bias_A –ve			20		14
	PTC Bias_A Shield			2 (A3)		46 (A3)
S	PTC Ground_A			2 (A3)		46 (A3)
STP	PTC JFETV Bias_A +ve			21		24
	PTC JFETV Bias_A -ve			3		35
	PTC JFETV Bias_A Shield			2 (A3)		46 (A3)
STP	SLW_BIAS_A1+ve			22		121
	SLW_BIAS_A1-ve			4		114
	SLW_BIAS_A1 shld			6(B3)		104(B3)
STP	SLW_BIAS_A2 +ve			5		102
	SLW_BIAS_A2 -ve			24		101
	SLW_BIAS_A2 shld			23(B3)		104(B3)
STP	SLW_JFETV_A1 +ve			25		92
	SLW_JFETV_A1 -ve			7		91
	SLW_JFETV_A1 shld			6(B3)		104(B3)
STP	SLW_JFETV_A2 +ve			8		103
	SLW_JFETV_A2 -ve			27		113
	SLW_JFETV_A2 shld			6(B3)		104(B3)
S	SLW GND WIRE_A			6(B3)		104(B3)
	FPU Faraday Shield Link_A			Note 1		47
STP	SSW_BIAS1_A +ve			28		90
	SSW_BIAS1_A –ve			10		79
	SSW_BIAS1_A shld			9(C3)		93(C3)
STP	SSW_JFETV1_A +ve			11		68
	SSW_JFETV1_A -ve			30		57
	SSW_JFETV1_A shld			29(C3)		93(C3)
S	SSW GND WIRE_A			12(C3)		93(C3)
STP	SSW_BIAS2_A +ve			13		69
	SSW_BIAS2_A –ve			32		80
	SSW_BIAS2_A shld			31(C3)		93(C3)
STP	SSW_JFETV2_A +ve			33		70
	SSW_JFETV2_A -ve			15		81
	SSW_JFETV2_A shld			14(C3)		93(C3)
S	S_HEATER GROUND A			NC		22(D3)
STP	SLW_JFET_HEATER_A +ve			17		23
	SLW_JFET_HEATER_A -ve			36		34
	SLW_JFET_HEATER_A shld			18(D3)		22(D3)
STP	SSW_JFET_HEATER_A +ve			37		33
	SSW_JFET_HEATER_A -ve			19		45
	SSW_JFET_HEATER_A shld			18(D3)		22(D3)
STP	PTC_JFET_HEATER_A +ve			16		44
	PTC_JFET_HEATER_A -ve			35		56

	Name	25-Way A P5	25-Way B P6	37-Way C P9	37-Way D P10	CVV 128-Way #1
	PTC_JFET_HEATER_A shld			NC		46 (A3)
STP	PTC Bias_B +ve				1	1
	PTC Bias_B –ve				20	8
	PTC Bias_B Shield				2 (A4)	4(A4)
S	PTC Ground_B				2 (A4)	4(A4)
STP	PTC JFETV Bias_B +ve				21	3
	PTC JFETV Bias_B –ve				3	2
	PTC JFETV Bias_B Shield				2 (A4)	4(A4)
STP	SLW_BIAS_B1+ve				22	13
	SLW_BIAS_B1-ve				4	12
	SLW_BIAS_B1 shld				6(B4)	32(B4)
STP	SLW_BIAS_B2 +ve				5	21
	SLW_BIAS_B2 –ve				24	20
	SLW_BIAS_B2 shld				23(B4)	32(B4)
STP	SLW_JFETV_B1 +ve				25	31
	SLW_JFETV_B1 –ve				7	43
	SLW_JFETV_B1 shld				6(B4)	32(B4)
STP	SLW_JFETV_B2 +ve				8	42
	SLW_JFETV_B2 –ve				27	54
	SLW_JFETV_B2 shld				6(B4)	32(B4)
S	SLW GND WIRE_B				6(B4)	32(B4)
	FPU Faraday Shield Link_B				Note 1	6
S	SSW GND WIRE_B				12(C4)	40(C4)
STP	SSW_BIAS1_B +ve				28	10
	SSW_BIAS1_B –ve				10	11
	SSW_BIAS1_B shld				9(C4)	40(C4)
STP	SSW_JFETV1_B +ve				11	19
	SSW_JFETV1_B -ve				30	29
	SSW_JFETV1_B shld				29(C4)	40(C4)
STP	SSW_BIAS2_B +ve				13	41
	SSW_BIAS2_B –ve				32	30
	SSW_BIAS2_B shld				31(C4)	40(C4)
STP	SSW_JFETV2_B +ve				33	53
	SSW_JFETV2_B -ve				15	52
	SSW_JFETV2_B shld				14(C4)	40
S	S_HEATER GROUND _B				NC	39(D4)
STP	SLW_HEATER_B +ve				17	18
	SLW_HEATER_B -ve				36	28
	SLW_HEATER_B shld				18(D4)	39(D4)
STP	SSW_HEATER_B +ve				37	9
	SSW_HEATER_B -ve				19	17
	SSW_HEATER_B shld				18(D4)	39(D4)
STP	PTC_JFET_HEATER_A +ve				16	16
	PTC_JFET_HEATER_A -ve				35	27
	PTC_JFET_HEATER_A shld				NC	4(A4)
	Harness Overshield	EMC Backshell	EMC Backshell	EMC Backshell	EMC Backshell	Via Pins 6&47

Note 1: FPU Faraday Shield Link Connected to harness bundle overshield.

4.4.2 C2 CVV2 to HSJFS Type4

Overall Mechanical Drawing

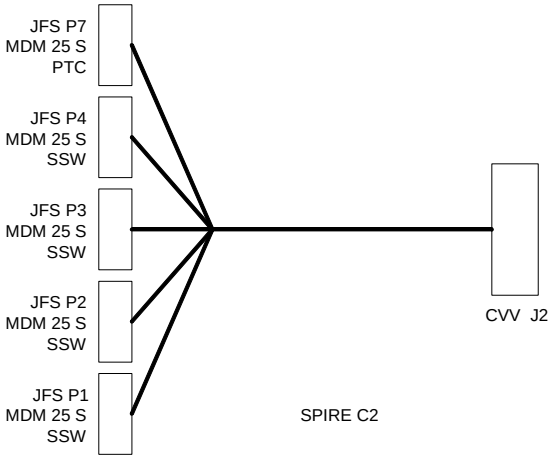

Connector/Backshell Details

MDM	25	S	+	Glenair	507	-	T	- 196	- M - 25	to	JFS J1	SSW JFET
MDM	25	S	+	Glenair	507	-	T	- 196	- M - 25	to	JFS J2	SSW JFET
MDM	25	S	+	Glenair	507	-	T	- 196	- M - 25	to	JFS J3	SSW JFET
MDM	25	S	+	Glenair	507	-	T	- 196	- M - 25	to	JFS J4	SSW JFET
MDM	25	S	+	Glenair	507	-	T	- 196	- M - 25	to	JFS J7	PTC

Harness Layup

Tails P2, P3 and P4 similar to tails in C4

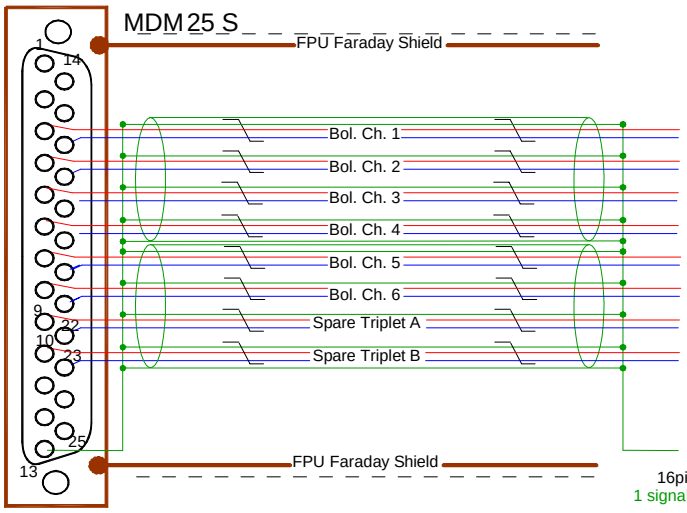

SSW JFET Tail (JFS P1)

· 2 12-ax

· The whole harness bundle is overlain with an RF screen Indicated by: ——— which is connected to EMC backshells at the JFS but isolated from the CVV Connector

· The dotted lines indicate insulation jacket covering the overshield. Only required at clamp points but could cover entire length of harness.

· The signals from the two Spare Triplets (carried on pins 9,10, 22 and 23 on JFS P1) terminate on open pins on the 128-Way #2.

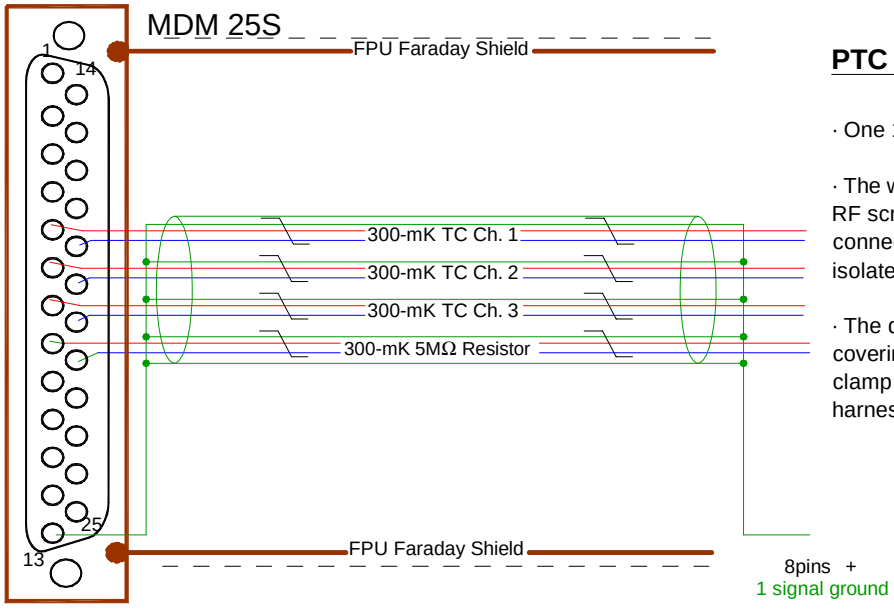

PTC Signals (JFS P7)

· One 12-ax

· The whole harness bundle is overlain with an RF screen Indicated by: ——— which is connected to EMC backshells at the JFS but isolated from the CVV Connector

· The dotted lines indicate insulation jacket covering the overshield. Only required at clamp points but could cover entire length of harness.

Note: The 5MΩ Resistor is wired to the CVV wall and shorted in the "I-Harness" CVV Connector

CVV C2 128-Way Pin Allocations (View of wiring side of connector)

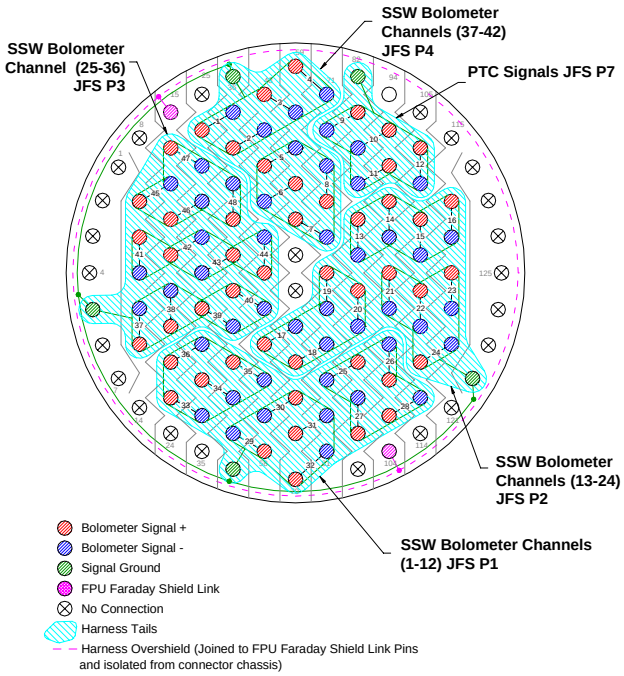

Overshields of the 12-ax and STP are commoned as indicated by signal ground connections and passed through the 128-way by dedicated ground pins.

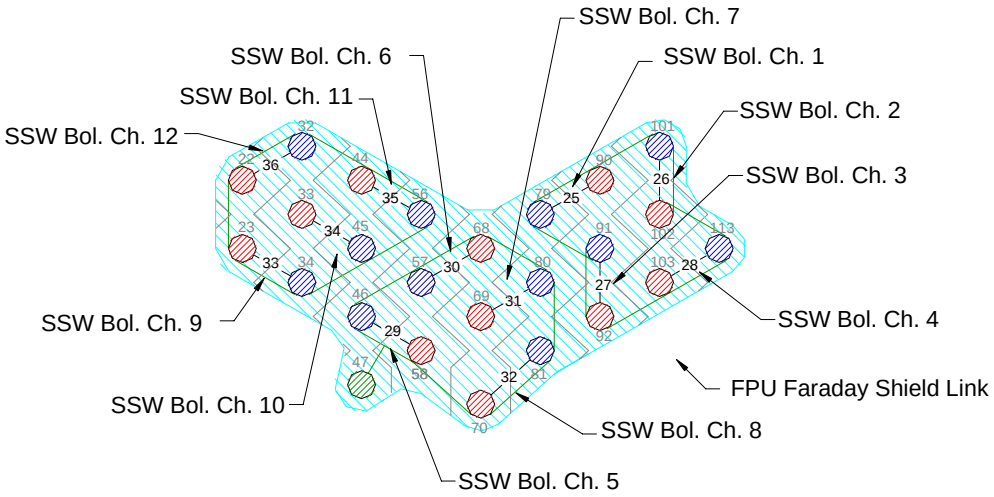

SSW Channels (1-12)
JFS P1

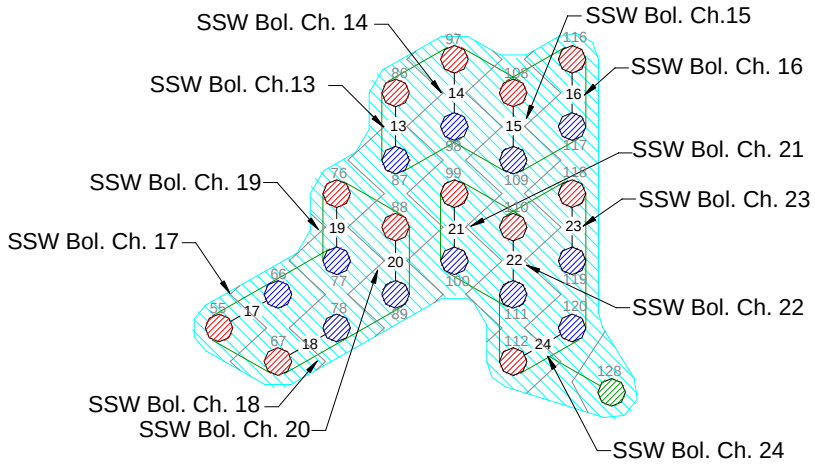

SSW Channels (13-24)
JFS P2

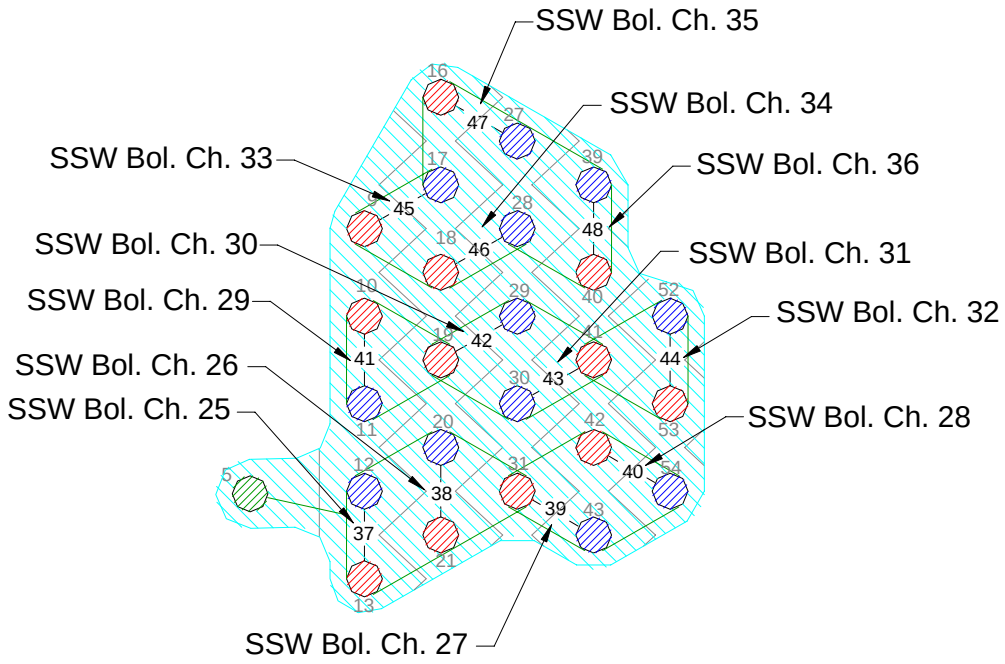

SSW Channels (25-36)
JFS P3

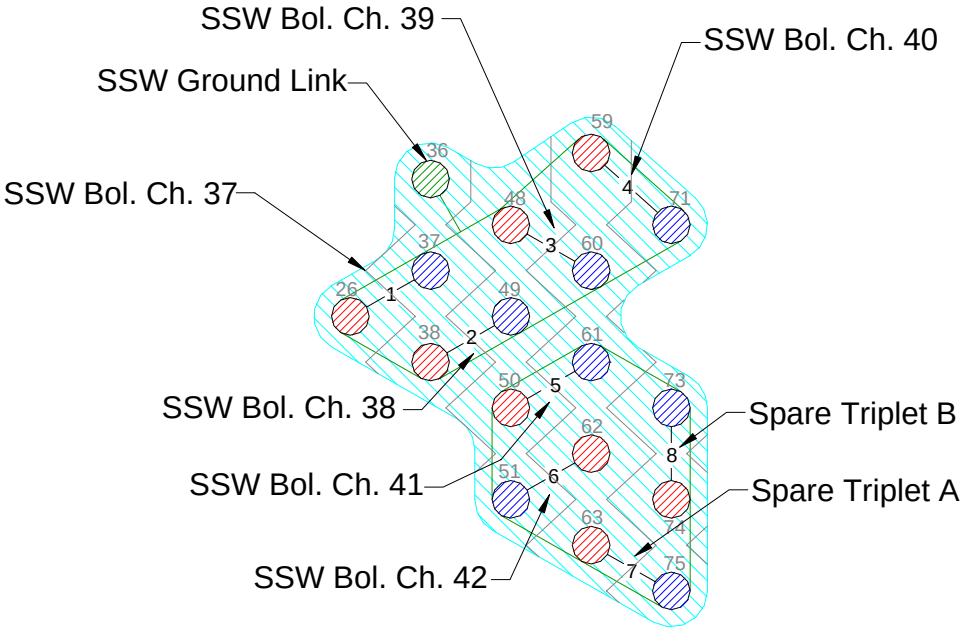

SSW Channels (37-42)
JFS P4

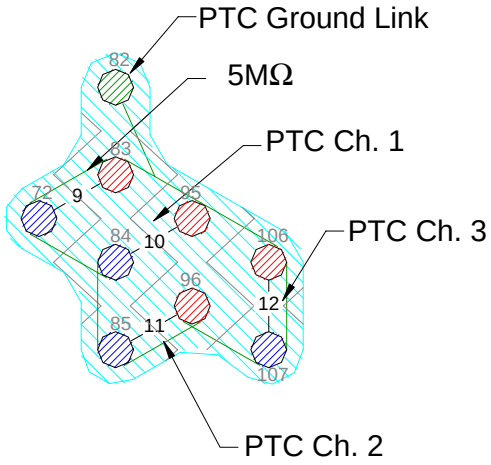

PTC Channels (1-3)
JFS P7

Note:

1. Pin numbers suffixed by a letter in parentheses indicated the commoning of pins within the 128-way connector. Note the separation of the SSW Ground reference and the PTC Ground Reference.
2. The two spare triplets terminate on open pins on the 128-Way.

Type	Name	25way A JFS P1	25wayB JFS P2	25Way C JFS P3	25way D JFS P4	25-Way E JFS P7	128Way #2
12-ax	Bol. Channel 1 +	1					90
	Bol. Channel 1 -	14					79
	Bol. Channel 1gnd	13 (A)					128(A)
	Bol. Channel 2 +	2					102
	Bol. Channel 2 -	15					101
	Bol. Channel 2gnd	13 (A)					128(A)
	Bol. Channel 3 +	3					92
	Bol. Channel 3 -	16					91
	Bol. Channel 3gnd	13 (A)					128(A)
	Bol. Channel 4 +	4					103
	Bol. Channel 4 -	17					113
	Bol. Channel 4gnd	13 (A)					128(A)
12-ax	Bol. Channel 5 +	5					58
	Bol. Channel 5 -	18					46
	Bol. Channel 5gnd	13 (A)					128(A)
	Bol. Channel 6 +	6					68
	Bol. Channel 6 -	19					57
	Bol. Channel 6gnd	13 (A)					128(A)
	Bol. Channel 7 +	20					69
	Bol. Channel 7 -	7					80
	Bol. Channel 7gnd	13 (A)					128(A)
	Bol. Channel 8 +	21					70
	Bol. Channel 8 -	8					81
	Bol. Channel 8gnd	13 (A)					128(A)
12-ax	Bol. Channel 9 +	22					23
	Bol. Channel 9 -	9					34
	Bol. Channel 9gnd	13 (A)					4(A)
	Bol. Channel 10 +	23					33
	Bol. Channel 10 -	10					45
	Bol. Channel 10gnd	13 (A)					4(A)
	Bol. Channel 11 +	24					44
	Bol. Channel 11 -	11					56
	Bol. Channel 11gnd	13 (A)					4(A)
	Bol. Channel 12 +	25					22
	Bol. Channel 12 -	12					32
	Bol. Channel 12gnd	13 (A)					4(A)
12-ax	Bol. Channel 13 +		1				86
	Bol. Channel 13 -		14				87
	Bol. Channel 1gnd		13 (A)				36(A)
	Bol. Channel 14 +		2				97
	Bol. Channel 14 -		15				98
	Bol. Channel 14 gnd		13 (A)				36(A)
	Bol. Channel 15 +		3				108
	Bol. Channel 15 -		16				109
	Bol. Channel 15gnd		13 (A)				36(A)
	Bol. Channel 16 +		4				116
	Bol. Channel 16 -		17				117
	Bol. Channel 16gnd		13 (A)				36(A)
12-ax	Bol. Channel 17 +		5				55
	Bol. Channel 17 -		18				66
	Bol. Channel 17gnd		13 (A)				128(A)
	Bol. Channel 18 +		6				67
	Bol. Channel 18 -		19				78

Type	Name	25way A JFS P1	25wayB JFS P2	25Way C JFS P3	25way D JFS P4	25-Way E JFS P7	128Way #2
	Bol. Channel 18gnd		13 (A)				128(A)
	Bol. Channel 19 +		20				76
	Bol. Channel 19 -		7				77
	Bol. Channel 19gnd		13 (A)				128(A)
	Bol. Channel 20 +		21				88
	Bol. Channel 20 -		8				89
	Bol. Channel 20gnd		13 (A)				128(A)
12-ax	Bol. Channel 21 +		22				99
	Bol. Channel 21 -		9				100
	Bol. Channel 21gnd		13 (A)				128(A)
	Bol. Channel 22 +		23				110
	Bol. Channel 22 -		10				111
	Bol. Channel 22gnd		13 (A)				128(A)
	Bol. Channel 23 +		24				118
	Bol. Channel 23 -		11				119
	Bol. Channel 23gnd		13 (A)				128(A)
	Bol. Channel 24 +		25				112
	Bol. Channel 24 -		12				120
	Bol. Channel 24gnd		13 (A)				128(A)
12-ax	Bol. Channel 25 +			1			13
	Bol. Channel 25 -			14			12
	Bol. Channel 25gnd			13 (A)			4(A)
	Bol. Channel 26 +			2			21
	Bol. Channel 26 -			15			20
	Bol. Channel 26gnd			13 (A)			4(A)
	Bol. Channel 27 +			3			31
	Bol. Channel 27 -			16			43
	Bol. Channel 27gnd			13 (A)			4(A)
	Bol. Channel 28 +			4			42
	Bol. Channel 28 -			17			54
	Bol. Channel 28gnd			13 (A)			4(A)
12-ax	Bol. Channel 29 +			5			10
	Bol. Channel 29 -			18			11
	Bol. Channel 29gnd			13 (A)			4(A)
	Bol. Channel 30 +			6			19
	Bol. Channel 30 -			19			29
	Bol. Channel 30gnd			13 (A)			4(A)
	Bol. Channel 31 +			20			41
	Bol. Channel 31 -			7			30
	Bol. Channel 31gnd			13 (A)			4(A)
	Bol. Channel 32 +			21			53
	Bol. Channel 32 -			8			52
	Bol. Channel 32gnd			13 (A)			4(A)
12-ax	Bol. Channel 33 +			22			9
	Bol. Channel 33 -			9			17
	Bol. Channel 33gnd			13 (A)			4(A)
	Bol. Channel 34 +			23			18
	Bol. Channel 34 -			10			28
	Bol. Channel 34gnd			13 (A)			4(A)
	Bol. Channel 35 +			24			16
	Bol. Channel 35 -			11			27
	Bol. Channel 35gnd			13 (A)			4(A)
	Bol. Channel 36 +			25			40
	Bol. Channel 36 -			12			39
	Bol. Channel 36gnd			13 (A)			4(A)
12-ax	Bol. Channel 37 +				3		26
	Bol. Channel 37 -				16		37
	Bol. Channel 37gnd				13 (A)		36(A)

Type	Name	25way A JFS P1	25wayB JFS P2	25Way C JFS P3	25way D JFS P4	25-Way E JFS P7	128Way #2
	Bol. Channel 38 +				4		38
	Bol. Channel 38 -				17		49
	Bol. Channel 38gnd				13 (A)		36(A)
	Bol. Channel 39 +				5		48
	Bol. Channel 39 -				18		60
	Bol. Channel 39gnd				13 (A)		36(A)
	Bol. Channel 40 +				6		59
	Bol. Channel 40 -				19		71
	Bol. Channel 40gnd				13 (A)		36(A)
12-ax	Bol. Channel 41 +				20		50
	Bol. Channel 41 -				7		61
	Bol. Channel 41gnd				13 (A)		36(A)
	Bol. Channel 42 +				21		62
	Bol. Channel 42 -				8		51
	Bol. Channel 42gnd				13 (A)		36(A)
	Spare Triplet 1A				22		63
	Spare Triplet 1B				9		75
	Spare Triplet 1C				13 (A)		36(A)
	Spare Triplet 2A				23		74
	Spare Triplet 2B				10		73
	Spare Triplet 2C				13 (A)		36(A)
12-ax	PTC Channel 1 +					5	95
	PTC Channel 1 -					18	84
	PTC Channel 1gnd					13 (A)	82(B)
	PTC Channel 2 +					6	96
	PTC Channel 2 -					19	85
	PTC Channel 2gnd					13 (A)	82(B)
	PTC Channel 3 +					7	106
	PTC Channel 3 -					20	107
	PTC Channel 3gnd					13 (A)	82(B)
	PTC 5MΩ Resistor +					8	83
	PTC 5MΩ Resistor -					21	72
	PTC 5MΩ Resistor gnd					13 (A)	82(B)
	Harness Overshield	EMC Backshell	EMC Backshell	EMC Backshell	EMC Backshell	EMC Backshell	EMC Backshell

4.4.3 C3 CVV3 to HSJFP Type2

Overall Mechanical Drawing

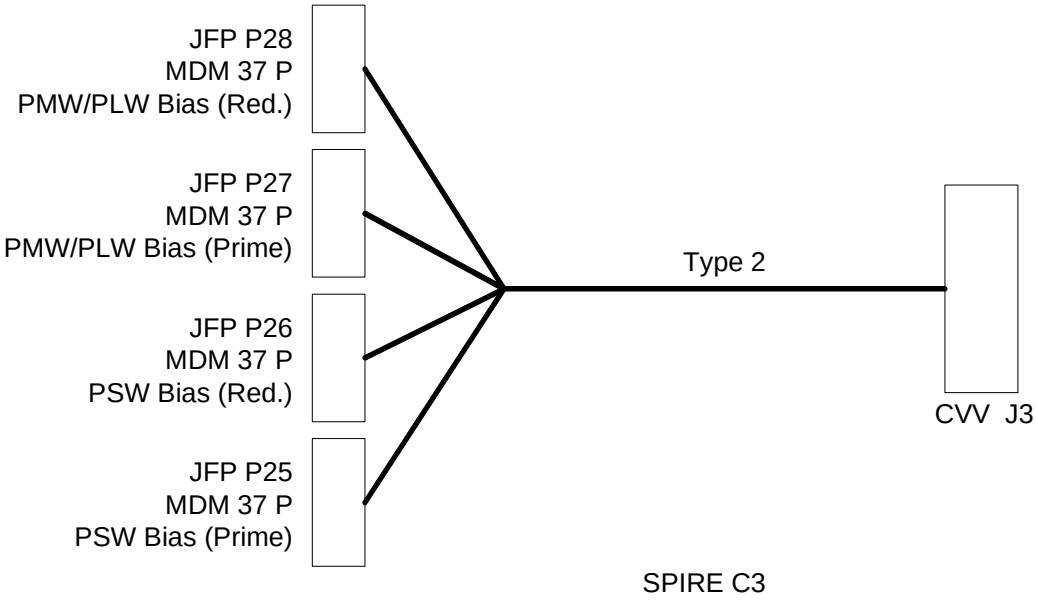

Connector/Backshell Details

MDM	37	P + Glenair 507 - T - 196 - M - 37	to	JFP	J25	PSW Bias (P)
MDM	37	P + Glenair 507 - T - 196 - M - 37	to	JFP	J26	PSW Bias (R)
MDM	37	P + Glenair 507 - T - 196 - M - 37	to	JFP	J27	PMW/PLW Bias (P)
MDM	37	P + Glenair 507 - T - 196 - M - 37	to	JFP	J28	PMW/PLW Bias (R)

HARNESS LAYUP

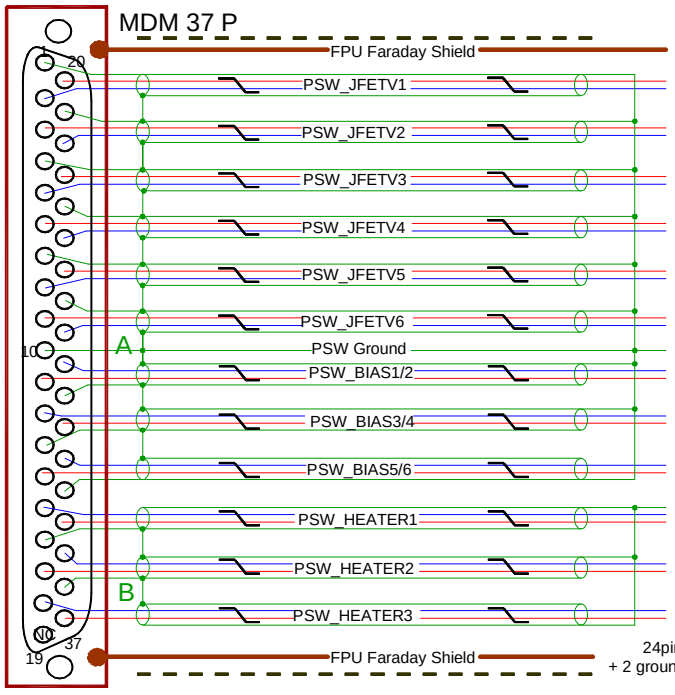

Type 2A (PSW)
Bias Tails JFP P25/P26

· 12 Insulated STPs
· 1 Single insulated ground wire

· The whole harness bundle is overlain with an RF screen Indicated by: ——— which is connected to EMC backshells at JFP but isolated from the wall of the CVV.

· The dotted lines indicate insulation jacket covering the overshield. Only required at clamp points but could cover entire length of harness.

· A and B represent the commoning of ground references within the connectors which pass through the 128-way CVV connector on individual pins.

· There are A (P25) and B (P26) versions of this tail in order to implement redundancy

· Harness connector is a **Plug**. Drawing indicates pin allocation as seen from the rear, non-engaging face of the connector.

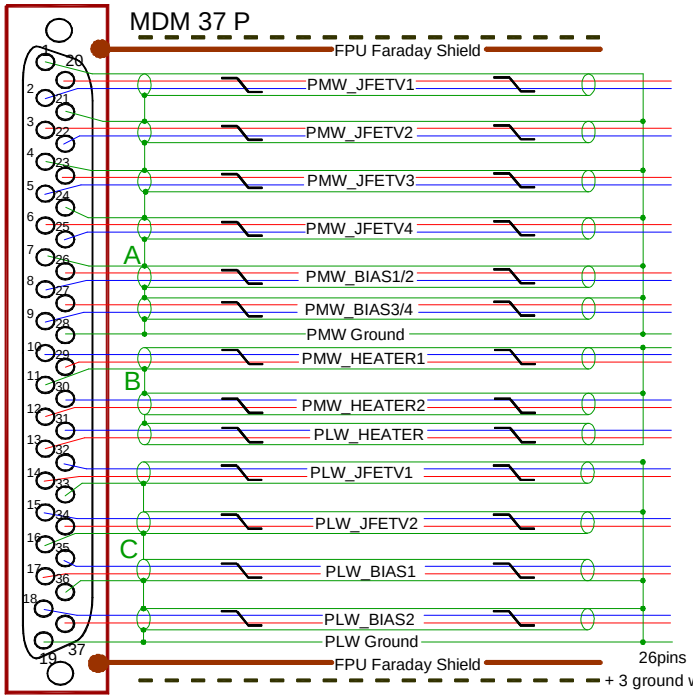

Type 2A (PMW/PLW)
Bias Tails JFP P27/P28

· 13 Insulated STPs
· 2 Single insulated ground wires

· The whole harness bundle is overlain with an RF screen Indicated by: ——— which is connected to EMC backshells at JFP but isolated from the wall of the CVV.

· The dotted lines indicate insulation jacket covering the overshield. Only required at clamp points but could cover entire length of harness.

· A and B represent the commoning of ground references within the connectors which pass through the 128-way CVV connector on individual pins.

· There are A (P27) and B (P28) versions of this tail in order to implement redundancy

· Heater wires are rated for the same current as the JFET supplies they substitute

· Harness connector is a **Plug**. Drawing indicates pin allocation as seen from the rear, non-engaging face of the connector.

CVV C3 128-Way Pin Allocations (View of wiring side of connector)

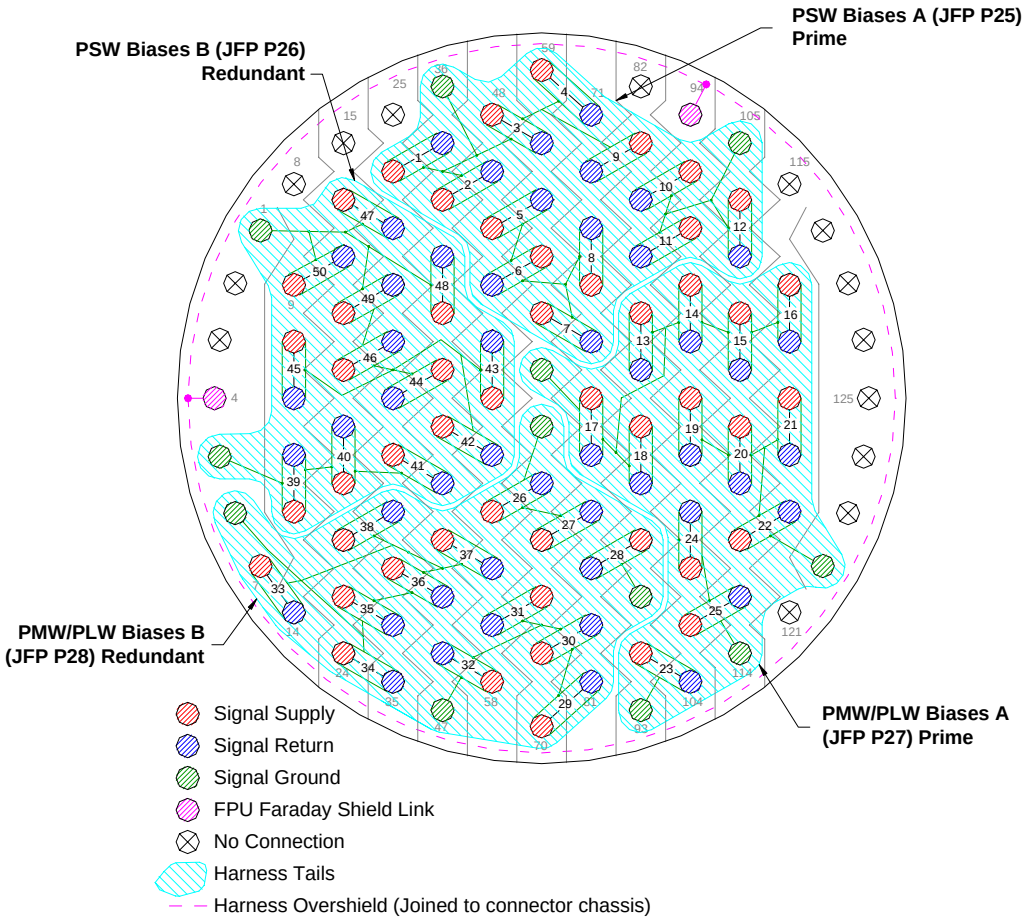

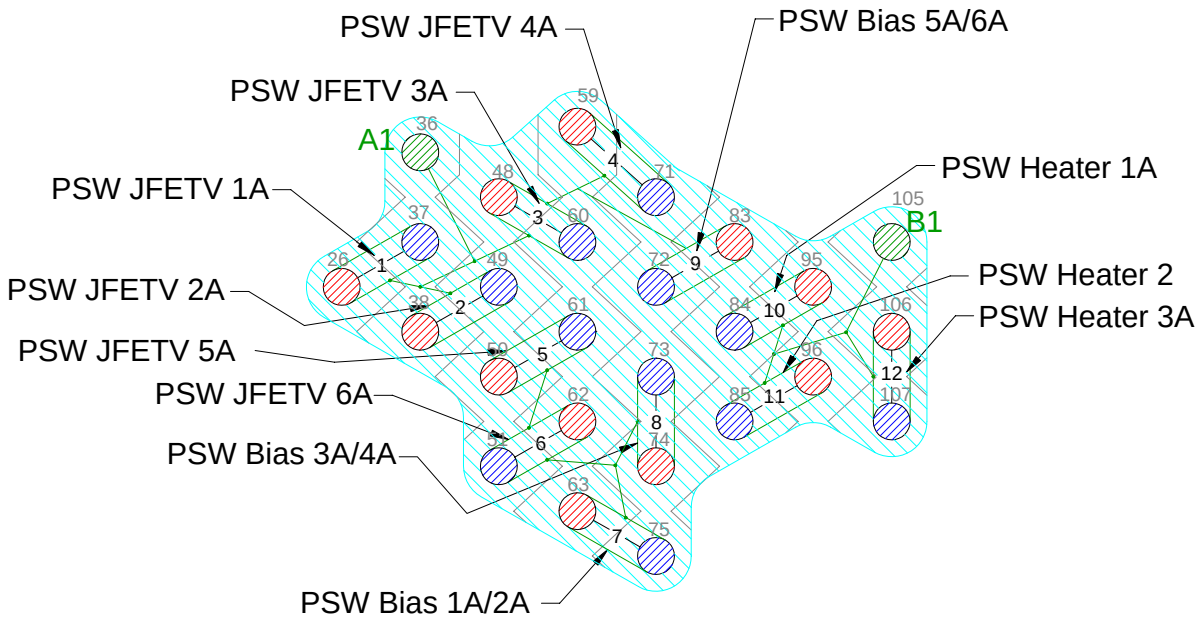

PSW Biases A (JFP P25)
Prime

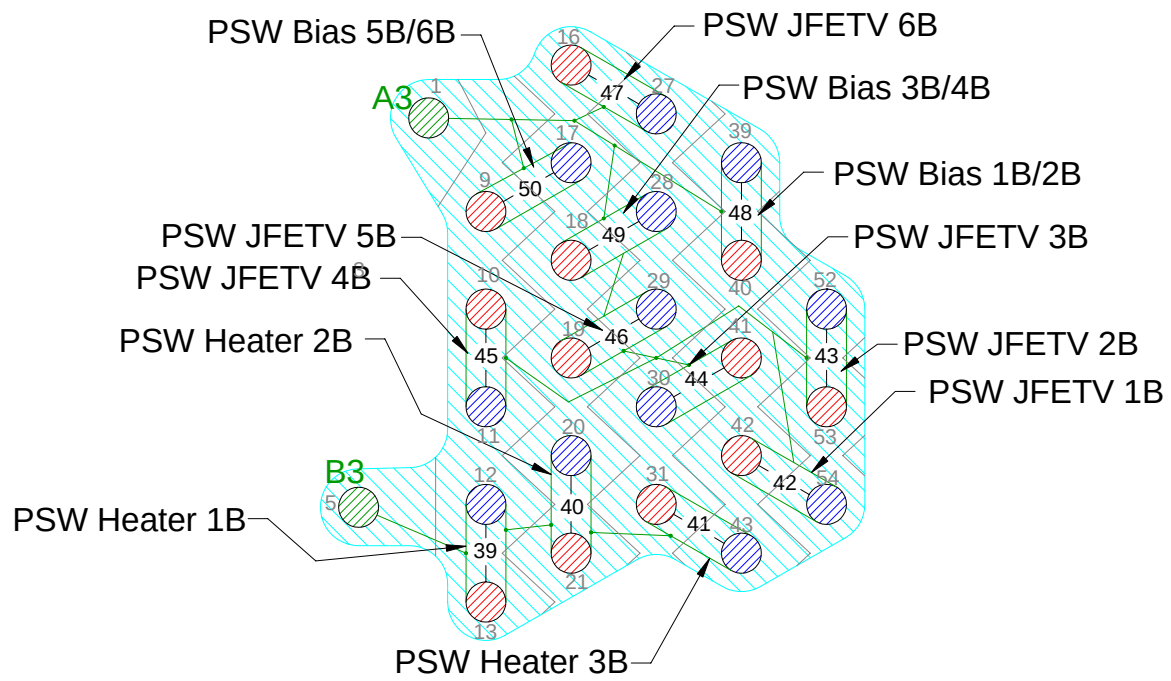

PSW Biases B (JFP P26)
Redundant

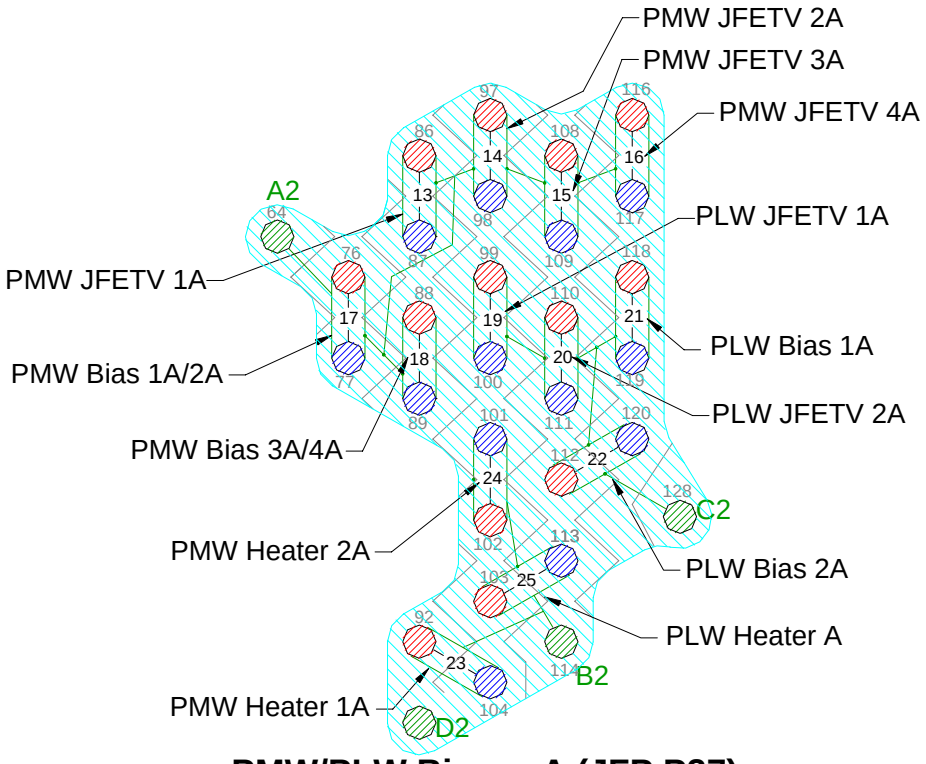

PMW/PLW Biases A (JFP P27)
Prime

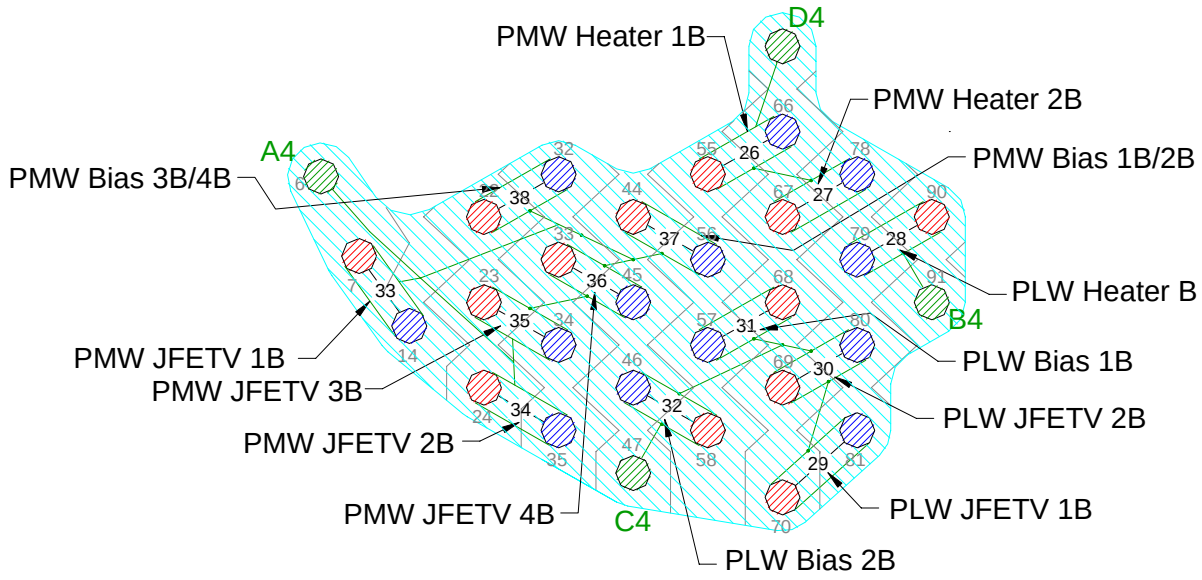

PMW/PLW Biases B (JFP P28)
Redundant

Contact Details

Name	37-way P25	37-way P27	37-Way P26	37-Way P28	128-Way #3
PSW_JFETV1_A +	20				26
PSW_JFETV1_A -	2				37
PSW_JFETV1_A shld	1 (A1)				36 (A1)
PSW_JFETV2_A +	3				38
PSW_JFETV2_A -	22				49
PSW_JFETV2_A shld	21 (A1)				36 (A1)
PSW_JFETV3_A +	23				48
PSW_JFETV3_A -	5				60
PSW_JFETV3_A shld	4 (A1)				36 (A1)
PSW_JFETV4_A +	6				59
PSW_JFETV4_A -	25				71
PSW_JFETV4_A shld	24 (A1)				36 (A1)
PSW_JFETV5_A +	26				50
PSW_JFETV5_A -	8				61
PSW_JFETV5_A shld	7 (A1)				36 (A1)
PSW_JFETV6_A +	9				62
PSW_JFETV6_A -	28				51
PSW_JFETV6_A shld	27 (A1)				36 (A1)
PSW GRND_A	10 (A1)				36 (A1)
PSW_BIAS1/2_A +	11				63
PSW_BIAS1/2_A -	29				75
PSW_BIAS1/2_A shld	30 (A1)				36 (A1)
PSW_BIAS3/4_A +	31				74
PSW_BIAS3/4_A -	12				73
PSW_BIAS3/4_A shld	13 (A1)				36 (A1)
PSW_BIAS5/6_A +	14				83
PSW_BIAS5/6_A -	32				72
PSW_BIAS5/6_A shld	33 (A1)				36 (A1)
PSW_HEATER_A1 +	34				95
PSW_HEATER_A1 -	15				84
PSW_HEATER_A1 shld	16 (B1)				105 (B1)
PSW_HEATER_A2 +	17				96
PSW_HEATER_A2 -	35				85
PSW_HEATER_A2 shld	36 (B1)				105 (B1)
PSW_HEATER_A3 +	37				106
PSW_HEATER_A3 -	18				107
PSW_HEATER_A3 shld	36 (B1)				105 (B1)
FPU Faraday Shield Link	NC				94
PMW_JFETV1_A +		20			86
PMW_JFETV1_A -		2			87
PMW_JFETV1_A shld		1 (A2)			64 (A2)
PMW_JFETV2_A +		3			97
PMW_JFETV2_A -		22			98
PMW_JFETV2_A shld		21 (A2)			64 (A2)
PMW_JFETV3_A +		23			108
PMW_JFETV3_A -		5			109
PMW_JFETV3_A shld		4 (A2)			64 (A2)
PMW_JFETV4_A +		6			116
PMW_JFETV4_A -		25			117
PMW_JFETV4_A shld		24 (A2)			64 (A2)
PMW_BIAS1/2_A +		26			76
PMW_BIAS1/2_A -		8			77
PMW_BIAS1/2_A shld		7 (A2)			64 (A2)
PMW_BIAS3/4_A +		27			88
PMW_BIAS3/4_A -		9			89
PMW_BIAS3/4_A shld		28 (A2)			64(A2)
PMW GND WIRE_A		28 (A2)			64 (A2)

Name	37-way P25	37-way P27	37-Way P26	37-Way P28	128-Way #3
PMW HEATER A1 +		29			103
PMW HEATER A1 -		10			113
PMW HEATER A1 shld		11(B2)			114 (B2)
PMW HEATER A2 +		12			102
PMW HEATER A2 -		30			101
PMW HEATER A2 shld		11(B2)			114 (B2)
PLW HEATER A +		13			92
PLW HEATER A -		31			104
PLW HEATER A shld		11(B2)			93(D2)
PLW_JFETV1_A +		14			99
PLW_JFETV1_A -		32			100
PLW_JFETV1_A shld		33 (C2)			128 (C2)
PLW_JFETV2_A +		34			110
PLW_JFETV2_A -		15			111
PLW_JFETV2_A shld		16 (C2)			128 (C2)
PLW_BIAS1_A +		17			118
PLW_BIAS1_A -		35			119
PLW_BIAS1_A shld		36 (C2)			128 (C2)
PLW_BIAS2_A +		37			112
PLW_BIAS2_A -		18			120
PLW_BIAS2_A shld		19 (C2)			128 (C2)
PLW GROUND WIRE A		19 (C2)			128 (C2)
PSW_JFETV1_B +			20		42
PSW_JFETV1_B -			2		54
PSW_JFETV1_B shld			1 (A3)		1 (A3)
PSW_JFETV2_B +			3		53
PSW_JFETV2_B -			22		52
PSW_JFETV2_B shld			21 (A3)		1 (A3)
PSW_JFETV3_B +			23		41
PSW_JFETV3_B -			5		30
PSW_JFETV3_B shld			4 (A3)		1 (A3)
PSW_JFETV4_B +			6		10
PSW_JFETV4_B -			25		11
PSW_JFETV4_B shld			24 (A3)		1 (A3)
PSW_JFETV5_B +			26		19
PSW_JFETV5_B -			8		29
PSW_JFETV5_B shld			7 (A3)		1 (A3)
PSW_JFETV6_B +			9		16
PSW_JFETV6_B -			28		27
PSW_JFETV6_B shld			27 (A3)		1 (A3)
PSW GRND_B			10 (A3)		1 (A3)
PSW_BIAS1/2_B +			11		40
PSW_BIAS1/2_B -			29		39
PSW_BIAS1/2_B shld			30 (A3)		1 (A3)
PSW_BIAS3/4_B +			31		18
PSW_BIAS3/4_B -			12		28
PSW_BIAS3/4_B shld			13 (A3)		1 (A3)
PSW_BIAS5/6_B +			14		9
PSW_BIAS5/6_B -			32		17
PSW_BIAS5/6_B shld			33 (A3)		1 (A3)
PSW_HEATER_B1 +			34		13
PSW_HEATER_B1 -			15		12
PSW_HEATER_B1 shld			16 (B3)		5 (B3)
PSW_HEATER_B2 +			17		21
PSW_HEATER_B2 -			35		20
PSW_HEATER_B2 shld			36 (B3)		5 (B3)
PSW_HEATER_B3 +			37		31
PSW_HEATER_B3 -			18		43
PSW_HEATER_B3 shld			36 (B3)		5 (B3)

Name	37-way P25	37-way P27	37-Way P26	37-Way P28	128-Way #3
FPU Faraday Shield Link			NC		4
PMW_JFETV1_B +				20	7
PMW_JFETV1_B -				2	14
PMW_JFETV1_B shld				1 (A4)	6 (A4)
PMW_JFETV2_B +				3	24
PMW_JFETV2_B -				22	35
PMW_JFETV2_B shld				21 (A4)	6 (A4)
PMW_JFETV3_B +				23	23
PMW_JFETV3_B -				5	34
PMW_JFETV3_B shld				4 (A4)	6 (A4)
PMW_JFETV4_B +				6	33
PMW_JFETV4_B -				25	45
PMW_JFETV4_B shld				24 (A4)	6 (A4)
PMW_BIAS1/2_B +				26	44
PMW_BIAS1/2_B -				8	56
PMW_BIAS1/2_B shld				7 (A4)	6 (A4)
PMW_BIAS3/4_B +				27	22
PMW_BIAS3/4_B -				9	32
PMW_BIAS3/4_B shld				28 (A4)	6 (A4)
PMW GND WIRE_B				28 (A4)	6 (A4)
PMW HEATER B1 +				29	55
PMW HEATER B1 -				10	66
PMW HEATER B1 shld				11 (B4)	65 (D4)
PMW HEATER B2 +				12	67
PMW HEATER B2 -				30	78
PMW HEATER B2 shld				11 (B4)	65 (D4)
PLW HEATER B +				13	90
PLW HEATER B -				31	79
PLW HEATER B shld				11 (B4)	65 (D4)
PLW_JFETV1_B +				14	70
PLW_JFETV1_B -				32	81
PLW_JFETV1_B shld				33 (C4)	47 (C4)
PLW_JFETV2_B +				34	69
PLW_JFETV2_B -				15	80
PLW_JFETV2_B shld				16 (C4)	47 (C4)
PLW_BIAS1_B +				17	68
PLW_BIAS1_B -				35	57
PLW_BIAS1_B shld				36 (C4)	47 (C4)
PLW_BIAS2_B +				37	58
PLW_BIAS2_B -				18	46
PLW_BIAS2_B shld				19 (C4)	47 (C4)
PLW GROUND WIRE B				19 (C4)	47 (C4)
Harness Over-shield	Via Pin 4& 94	EMC Backshell	EMC Backshell	EMC Backshell	EMC Backshell

4.4.4 C4 CVV4 to HSJFP Type1

Overall Mechanical Drawing

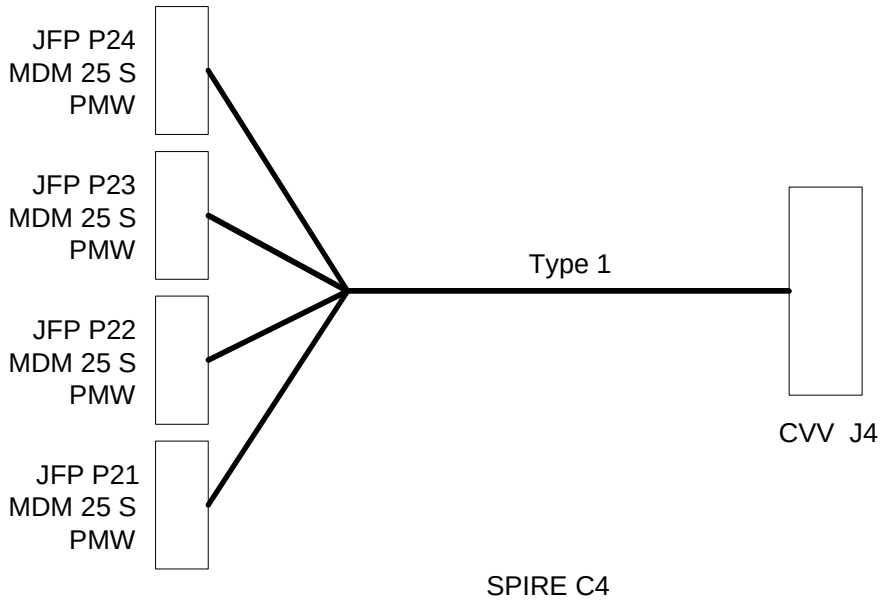

Connector Backshell Details

MDM	25	S	+	Glenair	507	-	T	-	196	-	M	-	37	to	JFP J21	PMW Signals
MDM	25	S	+	Glenair	507	-	T	-	196	-	M	-	37	to	JFP J22	PMW Signals
MDM	25	S	+	Glenair	507	-	T	-	196	-	M	-	37	to	JFP J23	PMW Signals
MDM	25	S	+	Glenair	507	-	T	-	196	-	M	-	37	to	JFP J24	PMW Signals

Harness Layup

The total harness layup is as follows:

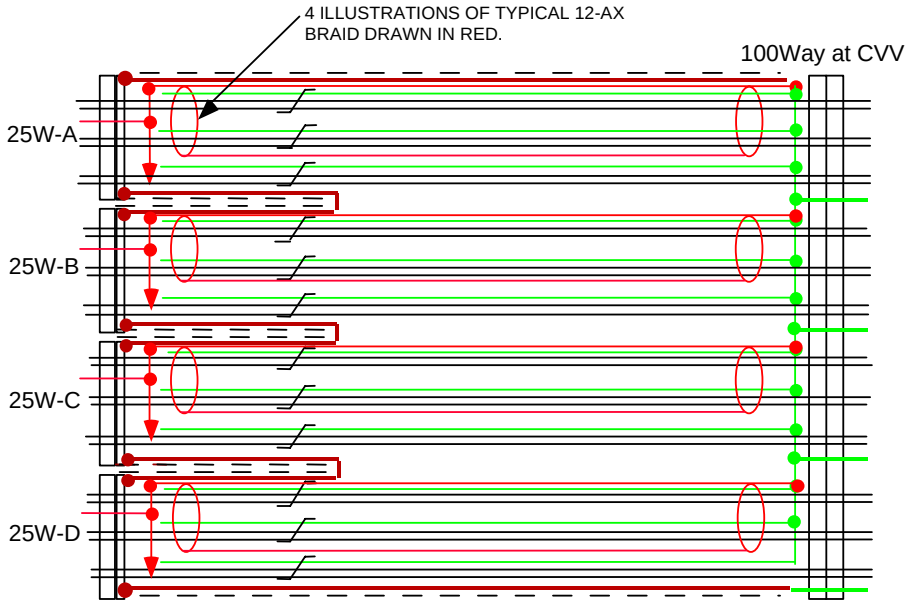

There are 48 channels each carried as a twisted triple, grouped in fours as "12-ax", each with its own insulated screen. So are 12 x 12-ax in all with three 12-ax to each 25 way MDM. The use of a third wire twisted with each channel's + & - wires minimises interchannel cross-talk inside each 12-

As for the intermediate harness, 4 pins carry ground through the 100 way and carry an isolated ground ring. All the third are made off to this, as are all the 12-ax

At the 25way MDMs, the three 12-ax braids (which have a much higher conductivity than that of the sum of all the third wires) are joined to the third wires and passed through the one non-signal

To keep RF screening distinct from low noise bolometer grounds, all of this harness is enclosed in separate outer r.f. screen, sealed to connector boots at the JFET end, overwrapped with insulation, and carried on a pin at the 100

Any one MDM tail, as drawn for the other harnesses, looks like: -

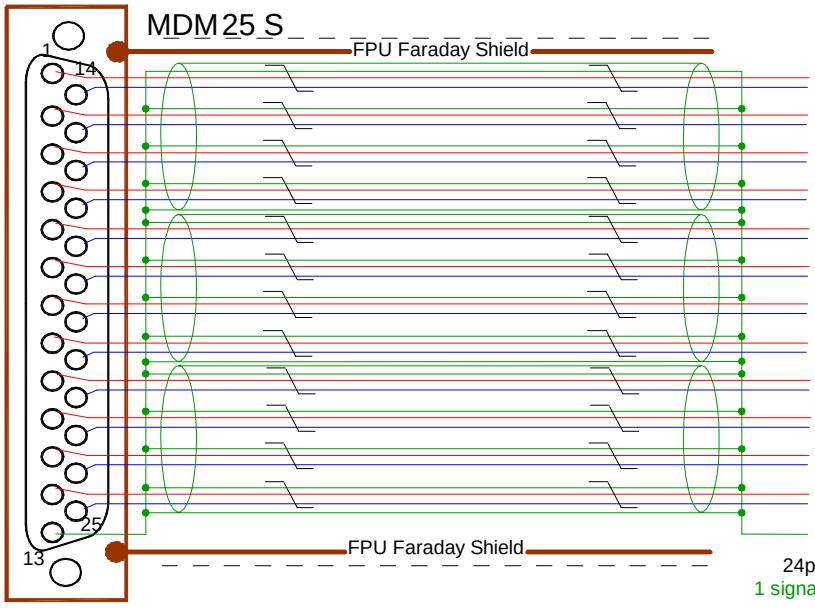

Type 1 JFET Tails

· 3 12-ax

· The whole harness bundle is overlain with an RF screen Indicated by: ——— which is connected to EMC backshells at the JFS but isolated from the CVV Connector

· The dotted lines indicate insulation jacket covering the overshield. Only required at clamp points but could cover entire length of harness.

· Harness connector is a Socket. Drawing indicates pin allocation as seen from the rear, non-engaging face of the connector.

CVV C4 128-Way Pin Allocations (View of wiring side of connector)

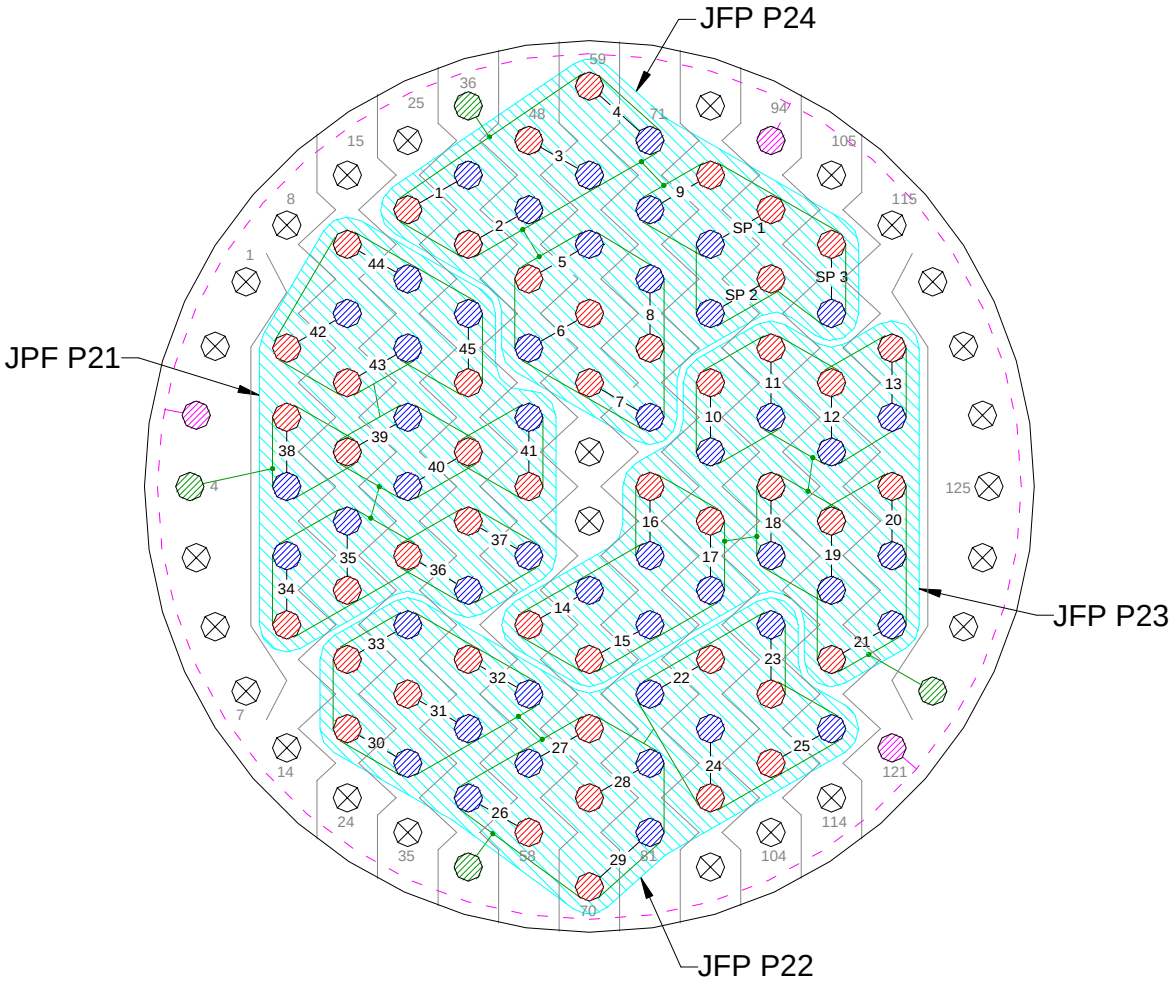

Bolometer Signal +
Bolometer Signal -
Signal Ground
FPU Faraday Shield Link
No Connection
Harness Tails
Harness Overshield (Joined to FPU Faraday Shield Link Pins and isolated from connector chassis)

- Shields of 12-ax are commoned as indicated by signal ground connections and passed through the 128-way by a dedicated ground pin.
- Three Spare channels from JFP P24 labelled as SP 1, SP 2 and SP 3 are terminated open on the cold side of the connector.

Note the contacts are named as "channels 1-48" end-end, and mapping to specific detector position is only maintained internal to the instrument.

	Name	25way A	25wayB	25Way C	25way D	128Way #4
12-ax	Channel 1 +	1				26
	Channel 1 -	14				37
	Channel 1gnd	13 (A1)				36 (A1)
	Channel 2 +	2				38
	Channel 2 -	15				49
	Channel 2gnd	13 (A1)				36 (A1)
	Channel 3 +	3				48
	Channel 3 -	16				60
	Channel 3gnd	13 (A1)				36 (A1)
	Channel 4 +	4				59
	Channel 4 -	17				71
	Channel 4gnd	13 (A1)				36 (A1)
12-ax	Channel 5 +	5				50
	Channel 5 -	18				61
	Channel 5gnd	13 (A1)				36 (A1)
	Channel 6 +	6				62
	Channel 6 -	19				51
	Channel 6gnd	13 (A1)				36 (A1)
	Channel 7 +	20				63
	Channel 7 -	7				75
	Channel 7gnd	13 (A1)				36 (A1)
	Channel 8 +	21				74
	Channel 8 -	8				73
	Channel 8gnd	13 (A1)				36 (A1)
12-ax	Channel 9 +	22				83
	Channel 9 -	9				72
	Channel 9gnd	13 (A1)				36 (A1)
	Spare Ch 1 +	23				95
	Spare Ch 1 -	10				84
	Spare Ch 1 gnd	13 (A1)				36 (A1)
	Spare Ch 2 +	24				96
	Spare Ch 2 -	11				85
	Spare Ch 2 gnd	13 (A1)				36 (A1)
	Spare Ch 3 +	25				36
	Spare Ch 3 -	12				107
	Spare Ch 3 gnd	13 (A1)				36 (A1)
	FPU Faraday Shield Link	NC				94
12-ax	Channel 10 +		1			86
	Channel 10 -		14			87
	Channel 10gnd		13 (A2)			128 (A2)
	Channel 11 +		2			97
	Channel 11 -		15			98
	Channel 11gnd		13 (A2)			128 (A2)
	Channel 12 +		3			108
	Channel 12 -		16			109
	Channel 12gnd		13 (A2)			128 (A2)
	Channel 13 +		4			116
	Channel 13 -		17			117
	Channel 13gnd		13 (A2)			128 (A2)
12-ax	Channel 14 +		5			55
	Channel 14 -		18			66
	Channel 1gnd		13 (A2)			128 (A2)
	Channel 15 +		6			67
	Channel 15 -		19			78
	Channel 15gnd		13 (A2)			128 (A2)
	Channel 16 +		20			76

	Name	25way A	25wayB	25Way C	25way D	128Way #4
	Channel 16 -		7			77
	Channel 16gnd		13 (A2)			128 (A2)
	Channel 17 +		21			88
	Channel 17 -		8			89
	Channel 17gnd		13 (A2)			128 (A2)
12-ax	Channel 18 +		22			99
	Channel 18 -		9			100
	Channel 18gnd		13 (A2)			128 (A2)
	Channel 19 +		23			110
	Channel 19 -		10			111
	Channel 19gnd		13 (A2)			128 (A2)
	Channel 20 +		24			118
	Channel 20 -		11			119
	Channel 20gnd		13 (A2)			128 (A2)
	Channel 21 +		25			112
	Channel 21 -		12			120
	Channel 21gnd		13 (A2)			128 (A2)
12-ax	Channel 22 +			1		90
	Channel 22 -			14		79
	Channel 22gnd			13 (A3)		47 (A3)
	Channel 23 +			2		102
	Channel 23 -			15		101
	Channel 23gnd			13 (A3)		47 (A3)
	Channel 24 +			3		92
	Channel 24 -			16		91
	Channel 24gnd			13 (A3)		47 (A3)
	Channel 25 +			4		103
	Channel 25 -			17		113
	Channel 25gnd			13 (A3)		47 (A3)
12-ax	Channel 26 +			5		58
	Channel 26 -			18		46
	Channel 26gnd			13 (A3)		47 (A3)
	Channel 27 +			6		68
	Channel 27 -			19		57
	Channel 27gnd			13 (A3)		47 (A3)
	Channel 28 +			20		69
	Channel 28 -			7		80
	Channel 28gnd			13 (A3)		47 (A3)
	Channel 29 +			21		70
	Channel 29 -			8		81
	Channel 29gnd			13 (A3)		47 (A3)
12-ax	Channel 30 +			22		23
	Channel 30 -			9		34
	Channel 30gnd			13 (A3)		47 (A3)
	Channel 31 +			23		33
	Channel 31 -			10		45
	Channel 31gnd			13 (A3)		47 (A3)
	Channel 32 +			24		44
	Channel 32 -			11		56
	Channel 32gnd			13 (A3)		47 (A3)
	Channel 33 +			25		22
	Channel 33 -			12		32
	Channel 33gnd			13 (A3)		47 (A3)
	FPU Faraday Shield Link			NC		104
12-ax	Channel 34 +				1	13
	Channel 34 -				14	12
	Channel 34gnd				13 (A4)	4 (A4)
	Channel 35 +				2	21
	Channel 35 -				15	20

	Name	25way A	25wayB	25Way C	25way D	128Way #4
	Channel 35gnd				13 (A4)	4 (A4)
	Channel 36 +				3	31
	Channel 36 -				16	43
	Channel 36gnd				13 (A4)	4 (A4)
	Channel 37 +				4	42
	Channel 37 -				17	54
	Channel 37gnd				13 (A4)	4 (A4)
12-ax	Channel 38 +				5	10
	Channel 38 -				18	11
	Channel 38gnd				13 (A4)	4 (A4)
	Channel 39 +				6	19
	Channel 39 -				19	29
	Channel 39gnd				13 (A4)	4 (A4)
	Channel 40 +				20	41
	Channel 40 -				7	30
	Channel 40gnd				13 (A4)	4 (A4)
	Channel 41 +				21	53
	Channel 41 -				8	52
	Channel 41gnd				13 (A4)	4 (A4)
12-ax	Channel 42 +				22	9
	Channel 42 -				9	17
	Channel 42gnd				13 (A4)	4 (A4)
	Channel 43 +				23	18
	Channel 43 -				10	28
	Channel 43gnd				13 (A4)	4 (A4)
	Channel 44 +				24	16
	Channel 44 -				11	27
	Channel 44gnd				13 (A4)	4 (A4)
	Channel 45 +				25	40
	Channel 45 -				12	39
	Channel 45gnd				13 (A4)	4 (A4)
	Harness Overshield	EMC Backshell	EMC Backshell	EMC Backshell	EMC Backshell	Harness Overshield via Pins 3, 94, 121

4.4.5 C5 CVV5 to HSJFP Type1

Overall Mechanical Drawing

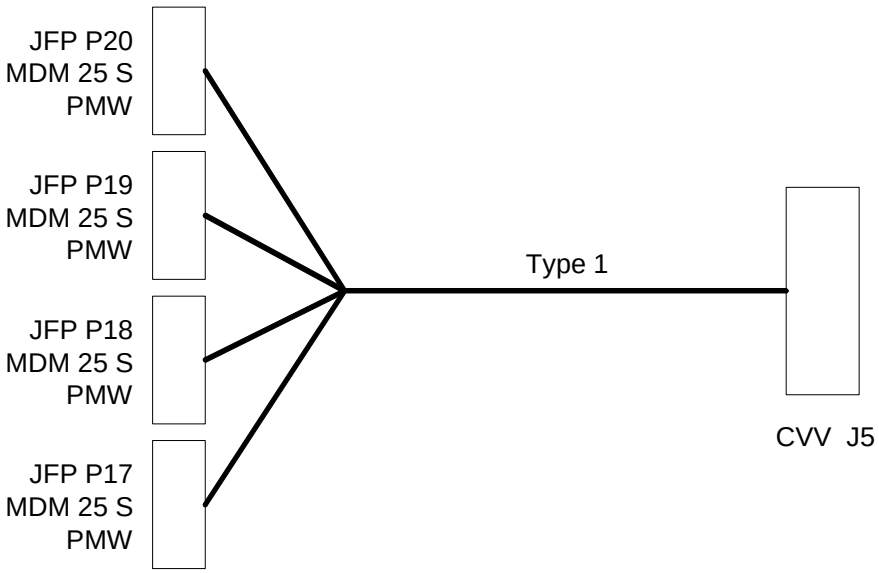

Connector/Backshell Details

MDM 25 S + Glenair 507 - T - 196 - M - 37 to	JFP J17	PMW Signals
MDM 25 S + Glenair 507 - T - 196 - M - 37 to	JFP J18	PMW Signals
MDM 25 S + Glenair 507 - T - 196 - M - 37 to	JFP J19	PMW Signals
MDM 25 S + Glenair 507 - T - 196 - M - 37 to	JFP J20	PMW Signals

Harness Layup

Four Tails as per C4

CVV C5 128-Way Pin Allocations (View of wiring side of connector)

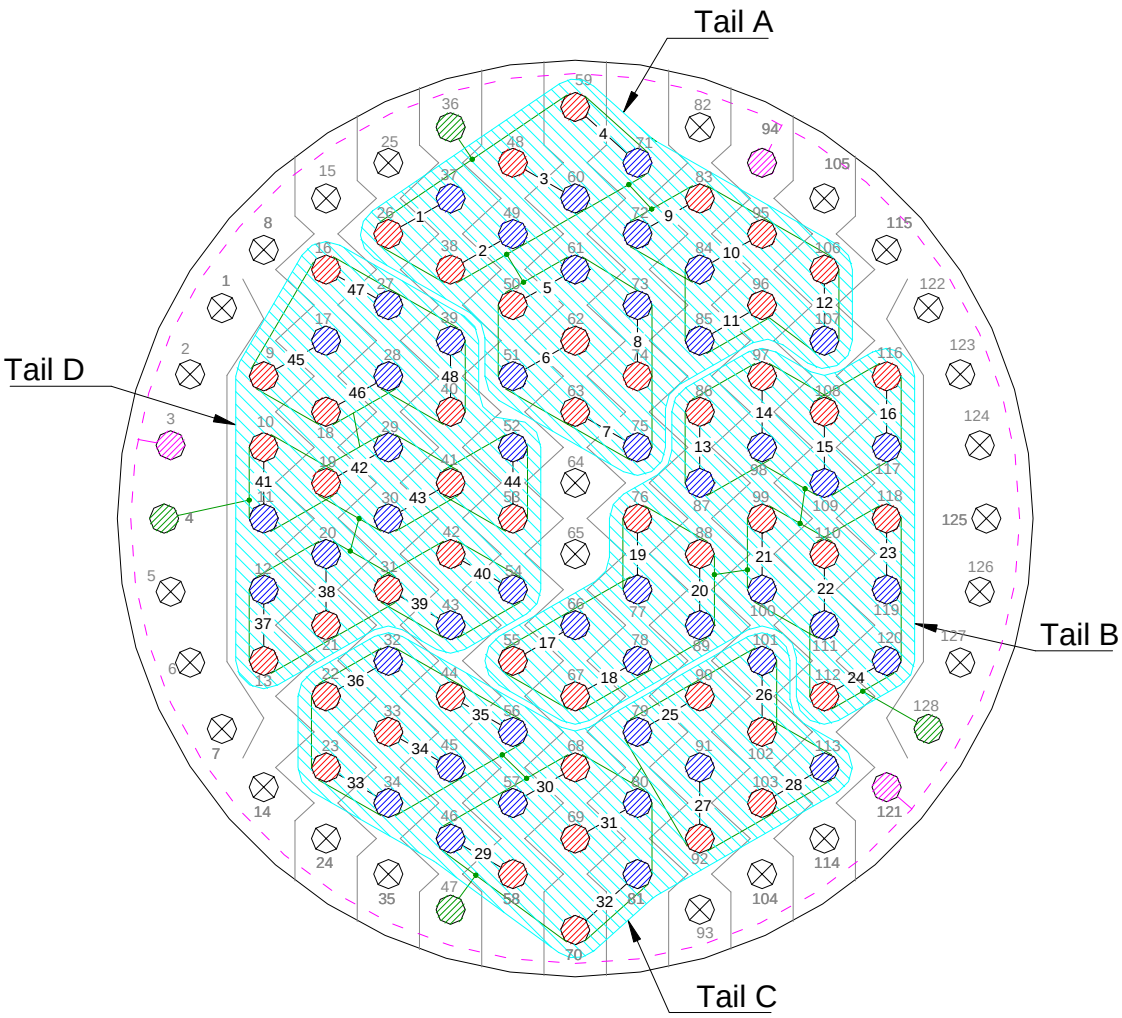

- Bolometer Signal +
- Bolometer Signal -
- Signal Ground
- FPU Faraday Shield Link
- No Connection
- Harness Tails
- Harness Overshield (Joined to FPU Faraday Shield Link Pins and isolated from connector chassis)

- Shields of 12-ax are commoned as indicated by signal ground connections and passed through the 128-way by a dedicated ground pin.

Contact Details

	Name	25way A	25wayB	25Way C	25way D	128Way #4
12-ax	Channel 1 +	1				26
	Channel 1 -	14				37
	Channel 1gnd	13 (A1)				36 (A1)
	Channel 2 +	2				38
	Channel 2 -	15				49
	Channel 2gnd	13 (A1)				36 (A1)
	Channel 3 +	3				48
	Channel 3 -	16				60
	Channel 3gnd	13 (A1)				36 (A1)
	Channel 4 +	4				59
	Channel 4 -	17				71
	Channel 4gnd	13 (A1)				36 (A1)
12-ax	Channel 5 +	5				50
	Channel 5 -	18				61
	Channel 5gnd	13 (A1)				36 (A1)
	Channel 6 +	6				62
	Channel 6 -	19				51
	Channel 6gnd	13 (A1)				36 (A1)
	Channel 7 +	20				63
	Channel 7 -	7				75
	Channel 7gnd	13 (A1)				36 (A1)
	Channel 8 +	21				74
	Channel 8 -	8				73
	Channel 8gnd	13 (A1)				36 (A1)
12-ax	Channel 9 +	22				83
	Channel 9 -	9				72
	Channel 9gnd	13 (A1)				36 (A1)
	Channel 10 +	23				95
	Channel 10 -	10				84
	Channel 10gnd	13 (A1)				36 (A1)
	Channel 11 +	24				96
	Channel 11 -	11				85
	Channel 11gnd	13 (A1)				36 (A1)
	Channel 12 +	25				36
	Channel 12 -	12				107
	Channel 12gnd	13 (A1)				36 (A1)
	FPU Faraday Shield Link	NC				94
12-ax	Channel 13 +		1			86
	Channel 13 -		14			87
	Channel 13gnd		13 (A2)			128 (A2)
	Channel 14 +		2			97
	Channel 14 -		15			98
	Channel 1gnd		13 (A2)			128 (A2)
	Channel 15 +		3			108
	Channel 15 -		16			109
	Channel 15gnd		13 (A2)			128 (A2)
	Channel 16 +		4			116
	Channel 16 -		17			117
	Channel 16gnd		13 (A2)			128 (A2)
12-ax	Channel 17 +		5			55
	Channel 17 -		18			66
	Channel 17gnd		13 (A2)			128 (A2)
	Channel 18 +		6			67
	Channel 18 -		19			78
	Channel 18gnd		13 (A2)			128 (A2)
	Channel 19 +		20			76
	Channel 19 -		7			77

	Name	25way A	25wayB	25Way C	25way D	128Way #4
	Channel 19gnd		13 (A2)			128 (A2)
	Channel 20 +		21			88
	Channel 20 -		8			89
	Channel 20gnd		13 (A2)			128 (A2)
12-ax	Channel 21 +		22			99
	Channel 21 -		9			100
	Channel 21gnd		13 (A2)			128 (A2)
	Channel 22 +		23			110
	Channel 22 -		10			111
	Channel 22gnd		13 (A2)			128 (A2)
	Channel 23 +		24			118
	Channel 23 -		11			119
	Channel 23gnd		13 (A2)			128 (A2)
	Channel 24 +		25			112
	Channel 24 -		12			120
	Channel 24gnd		13 (A2)			128 (A2)
12-ax	Channel 25 +			1		90
	Channel 25 -			14		79
	Channel 25gnd			13 (A3)		47 (A3)
	Channel 26 +			2		102
	Channel 26 -			15		101
	Channel 26gnd			13 (A3)		47 (A3)
	Channel 27 +			3		92
	Channel 27 -			16		91
	Channel 27gnd			13 (A3)		47 (A3)
	Channel 28 +			4		103
	Channel 28 -			17		113
	Channel 28gnd			13 (A3)		47 (A3)
12-ax	Channel 29 +			5		58
	Channel 29 -			18		46
	Channel 29gnd			13 (A3)		47 (A3)
	Channel 30 +			6		68
	Channel 30 -			19		57
	Channel 30gnd			13 (A3)		47 (A3)
	Channel 31 +			20		69
	Channel 31 -			7		80
	Channel 31gnd			13 (A3)		47 (A3)
	Channel 32 +			21		70
	Channel 32 -			8		81
	Channel 32gnd			13 (A3)		47 (A3)
12-ax	Channel 33 +			22		23
	Channel 33 -			9		34
	Channel 33gnd			13 (A3)		47 (A3)
	Channel 34 +			23		33
	Channel 34 -			10		45
	Channel 34gnd			13 (A3)		47 (A3)
	Channel 35 +			24		44
	Channel 35 -			11		56
	Channel 35gnd			13 (A3)		47 (A3)
	Channel 36 +			25		22
	Channel 36 -			12		32
	Channel 36gnd			13 (A3)		47 (A3)
	FPU Faraday Shield Link			NC		104
12-ax	Channel 37 +				1	13
	Channel 37 -				14	12
	Channel 37gnd				13 (A4)	4 (A4)
	Channel 38 +				2	21
	Channel 38 -				15	20
	Channel 38gnd				13 (A4)	4 (A4)

	Name	25way A	25wayB	25Way C	25way D	128Way #4
	Channel 39 +				3	31
	Channel 39 -				16	43
	Channel 39gnd				13 (A4)	4 (A4)
	Channel 40 +				4	42
	Channel 40 -				17	54
	Channel 40gnd				13 (A4)	4 (A4)
12-ax	Channel 41 +				5	10
	Channel 41 -				18	11
	Channel 41gnd				13 (A4)	4 (A4)
	Channel 42 +				6	19
	Channel 42 -				19	29
	Channel 42gnd				13 (A4)	4 (A4)
	Channel 43 +				20	41
	Channel 43 -				7	30
	Channel 43gnd				13 (A4)	4 (A4)
	Channel 44 +				21	53
	Channel 44 -				8	52
	Channel 44gnd				13 (A4)	4 (A4)
12-ax	Channel 45 +				22	9
	Channel 45 -				9	17
	Channel 45gnd				13 (A4)	4 (A4)
	Channel 46 +				23	18
	Channel 46 -				10	28
	Channel 46gnd				13 (A4)	4 (A4)
	Channel 47 +				24	16
	Channel 47 -				11	27
	Channel 47gnd				13 (A4)	4 (A4)
	Channel 48 +				25	40
	Channel 48 -				12	39
	Channel 48gnd				13 (A4)	4 (A4)
	Harness Overshield	EMC Backshell	EMC Backshell	EMC Backshell	EMC Backshell	Harness Overshield via Pins 3, 94, 121

4.4.6 C6 CVV6 to HSJFP Type1

Overall Mechanical Drawing

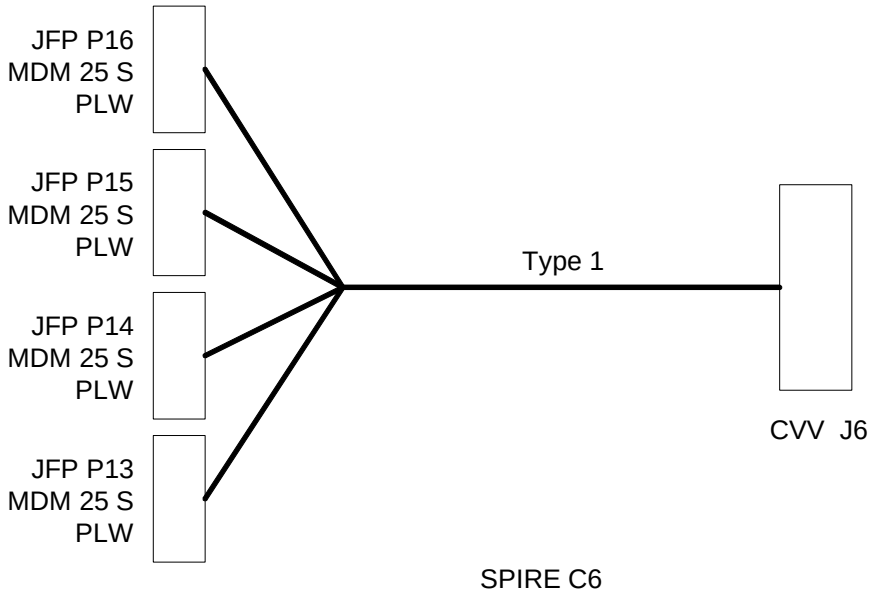

Connector/Backshell Details

MDM 25 S + Glenair 507 - T - 196 - M - 37	to	JFP J13	PLW Signals
MDM 25 S + Glenair 507 - T - 196 - M - 37	to	JFP J14	PLW Signals
MDM 25 S + Glenair 507 - T - 196 - M - 37	to	JFP J15	PLW Signals
MDM 25 S + Glenair 507 - T - 196 - M - 37	to	JFP J16	PLW Signals

Harness Layup

As C4.

Contact Details

As C4.

4.4.7 C7 CVV7 to HSJFP Type1

Overall Mechanical Drawing

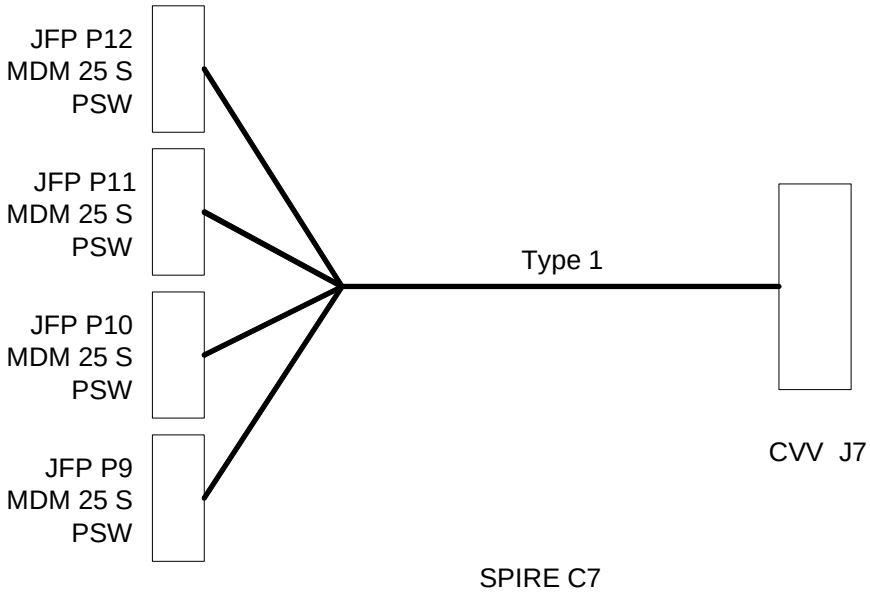

Connector/Backshell Details

MDM 25 S + Glenair 507 - T - 196 - M - 37	to	JFP J9	PSW Signals
MDM 25 S + Glenair 507 - T - 196 - M - 37	to	JFP J10	PSW Signals
MDM 25 S + Glenair 507 - T - 196 - M - 37	to	JFP J11	PSW Signals
MDM 25 S + Glenair 507 - T - 196 - M - 37	to	JFP J12	PSW Signals

Harness Layup

As C4.

Contact Details

As C4.

4.4.8 C8 CVV8 to HSJFP Type1

Overall Mechanical Drawing

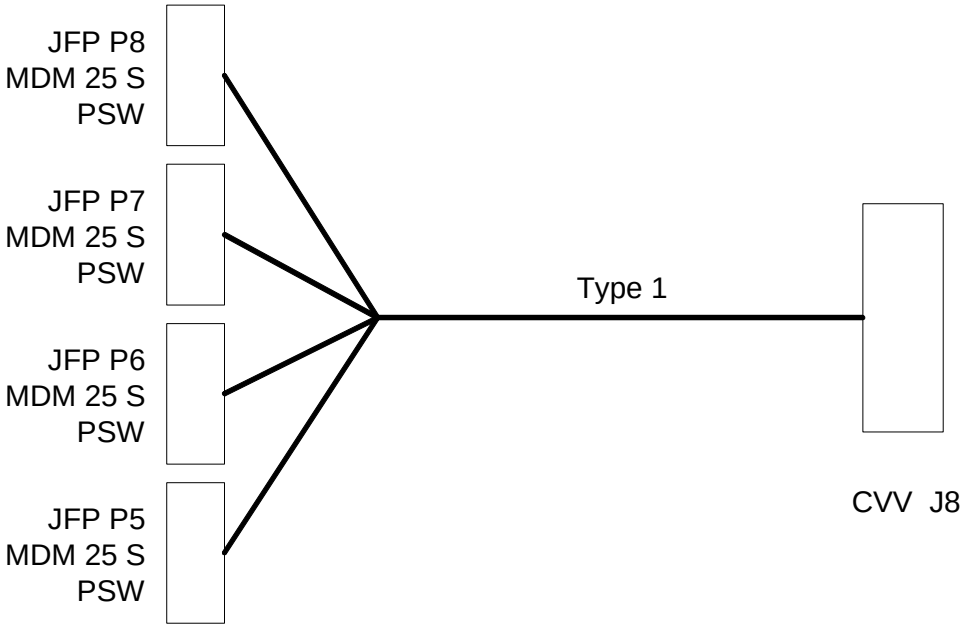

Connector/Backshell Details

MDM 25 S + Glenair 507 - T - 139 - M - 37	to	JFP J5	PSW Signals
MDM 25 S + Glenair 507 - T - 139 - M - 37	to	JFP J6	PSW Signals
MDM 25 S + Glenair 507 - T - 139 - M - 37	to	JFP J7	PSW Signals
MDM 25 S + Glenair 507 - T - 139 - M - 37	to	JFP J8	PSW Signals

Harness Layup

As C4.

Contact Details

As C4.

4.4.9 C9 CVV9 to HSJFP Type1

Overall Mechanical Drawing

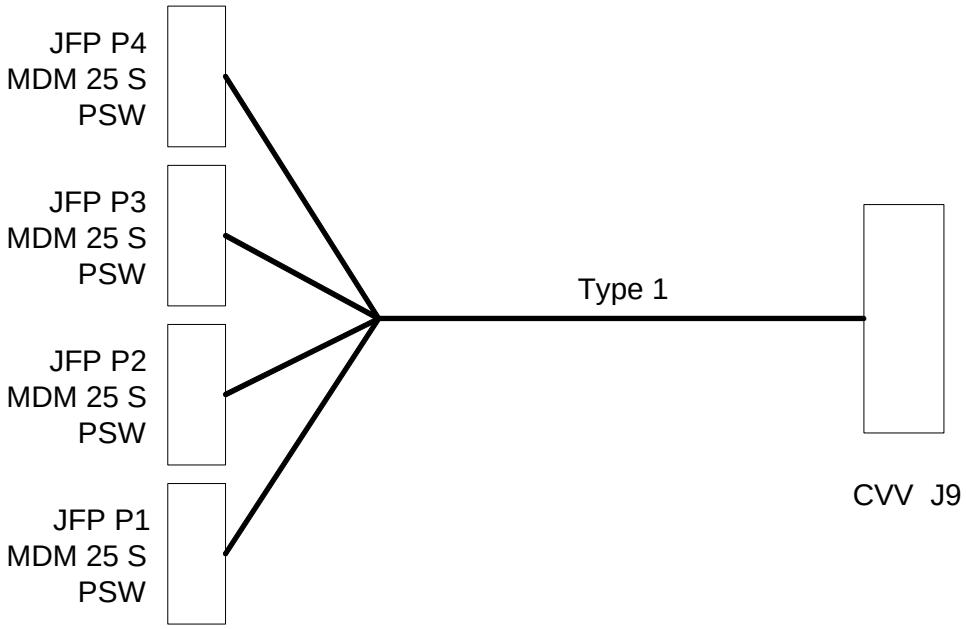

Connector/Backshell Details

MDM 25 S + Glenair 507 - T - 139 - M - 37	to	JFP J1	PSW Signals
MDM 25 S + Glenair 507 - T - 139 - M - 37	to	JFP J2	PSW Signals
MDM 25 S + Glenair 507 - T - 139 - M - 37	to	JFP J3	PSW Signals
MDM 25 S + Glenair 507 - T - 139 - M - 37	to	JFP J4	PSW Signals

Harness Layup

As C4.

Contact Details

As C4.

4.4.10 C10 CVV10 to HSFPU AUX-P

Overall Mechanical Drawing

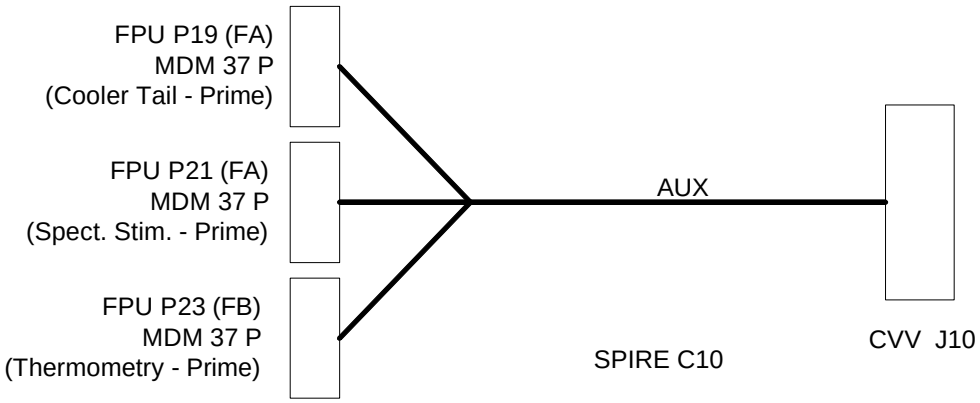

Connector/Backshell Details

Prime side harness

MDM 37 P + Glenair 507 - T - 139 - M - 37	to	FPU J19	FA - Cooler (P)
MDM 37 P + Glenair 507 - T - 139 - M - 37	to	FPU J21	FA – Spect. Stim. (P)
MDM 37 P + Glenair 507 - T - 139 - M - 37	to	FPU J23	FB – Therm. (P)

Harness Layup

Cooler Tail (FPU P19)

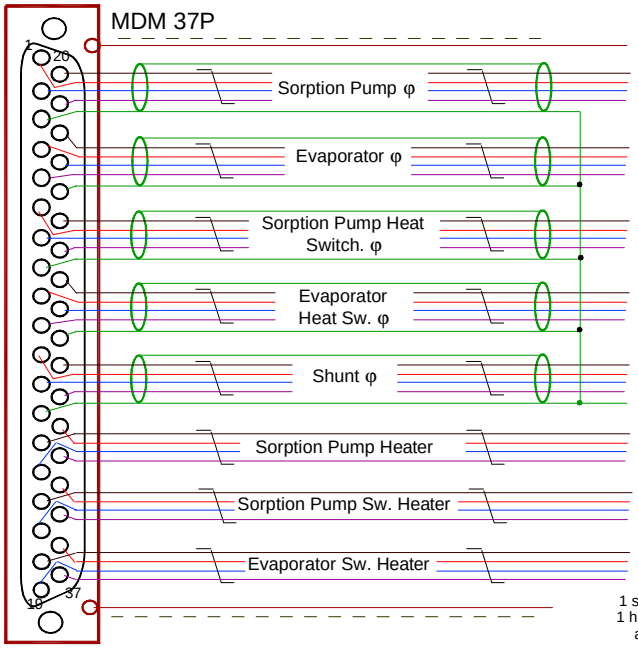

Sorption Cooler (FPU P19/P20)

· 5 Insulated STQs
· 3 Insulated TQs

· The whole harness bundle is overlain with an RF screen Indicated by: ——— which is connected to EMC backshells at the Shutter but NOT connected to the wall of the CVV.

· The dotted lines indicate insulation jacket covering the overshield. Only required at clamp points but could cover entire length of harness.

· Harness connector is a **Plug**. Drawing indicates pin allocation as seen from the rear, non-engaging face of the connector.

Spect. Stimulus Tail FPU P21/P22

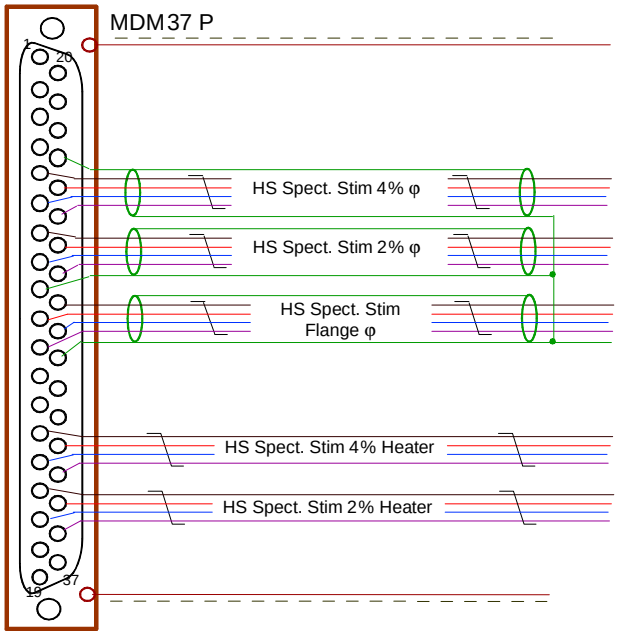

Spectrometer Stimulus Tails (FPU P21/P22)

· 3 Insulated STQs
· 2 Insulated TQs

· The whole harness bundle is overlain with an RF screen Indicated by: ——— which is connected to EMC backshells at the Shutter but NOT connected to the wall of the CVV.

· The dotted lines indicate insulation jacket covering the overshield. Only required at clamp points but could cover entire length of harness.

· Harness connector is a **Plug**. Drawing indicates pin allocation as seen from the rear, non-engaging face of the connector.

20 pins +
1 signal shield+
harness shield
at 100 way

HSFPU Thermometry Tail

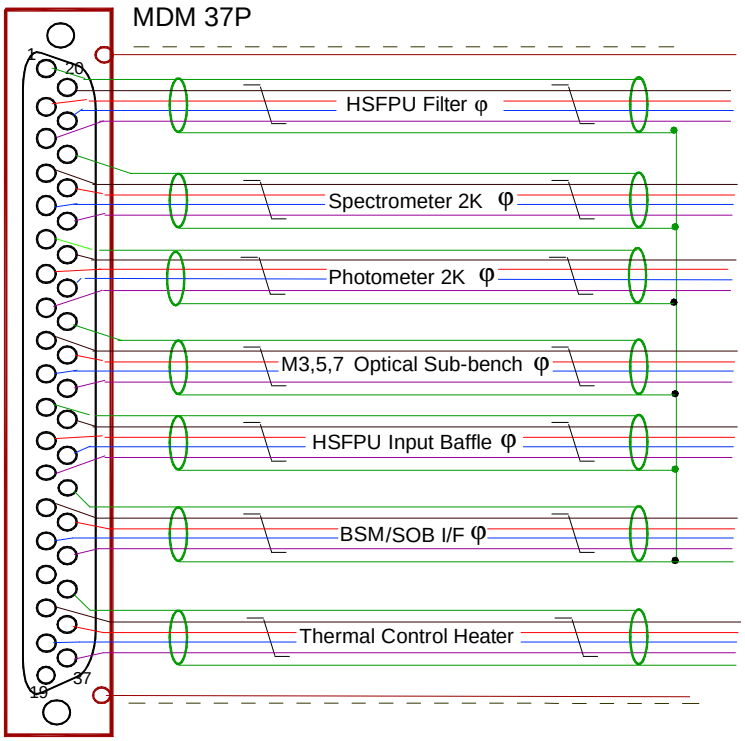

Thermometry Tails (FPU P23/P24)

· 7 Insulated STQs

· The whole harness bundle is overlain with an RF screen Indicated by: ——— which is connected to EMC backshells at the Shutter but NOT connected to the wall of the CVV.

· The dotted lines indicate insulation jacket covering the overshield. Only required at clamp points but could cover entire length of harness.

· Harness connector is a **Plug**. Drawing indicates pin allocation as seen from the rear, non-engaging face of the connector.

28 pins +
2signal grounds+
harness screeen
at 128way

CVV C10 128-Way Pin Allocations (View of wiring side of connector)

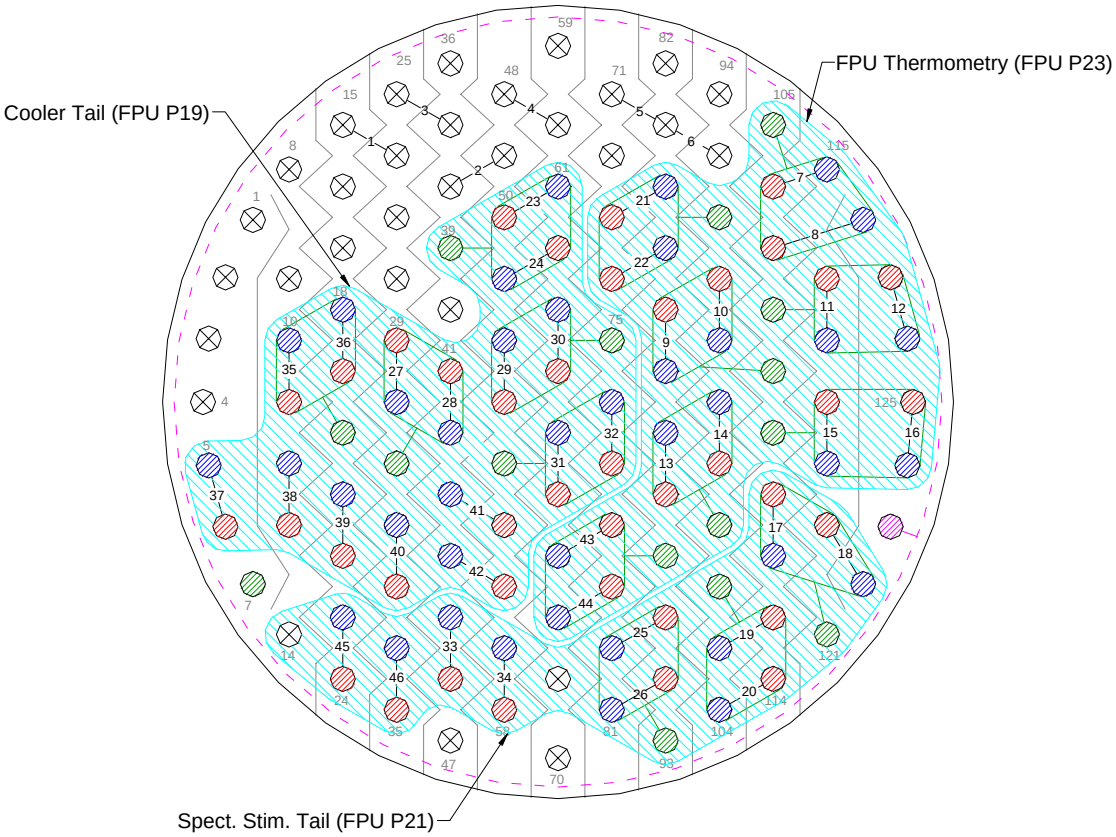

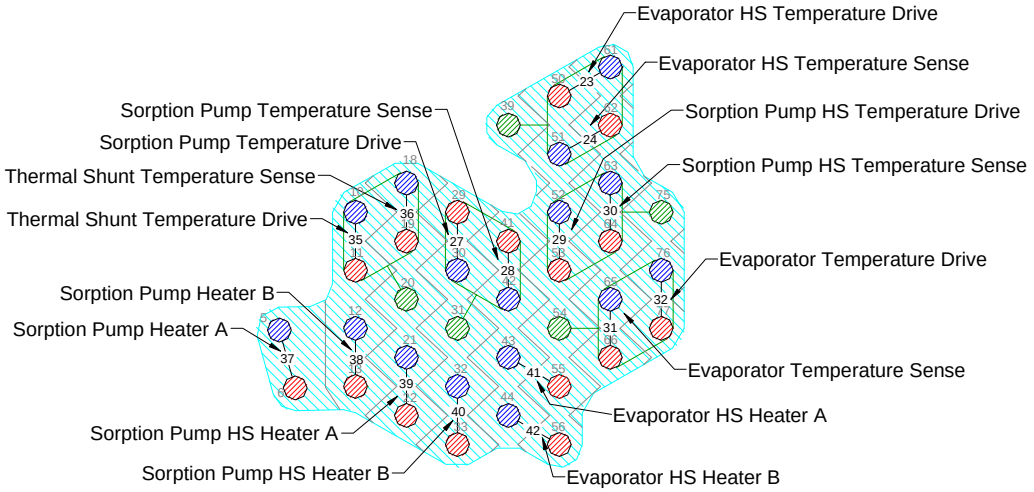

Cooler Tail (FPU P19)

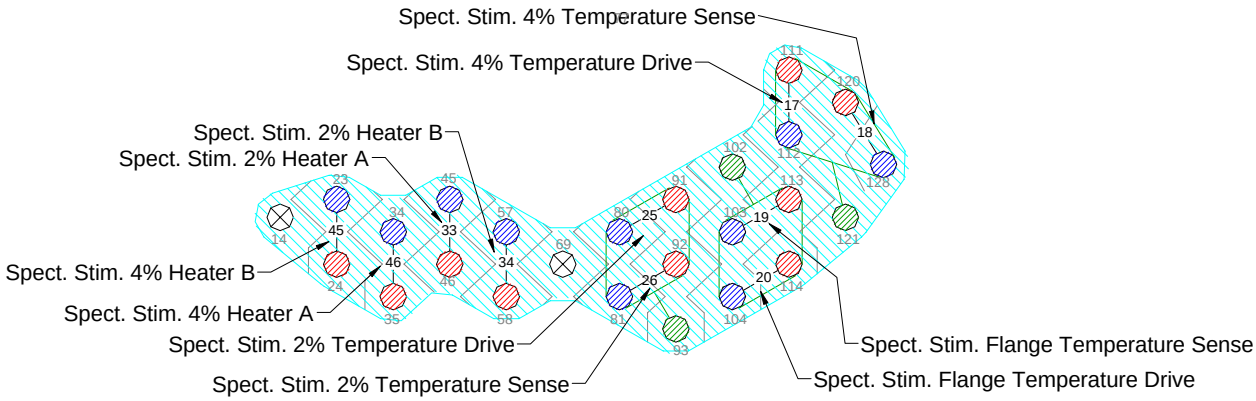

Spectrometer Stimulus Tail (FPU P21)

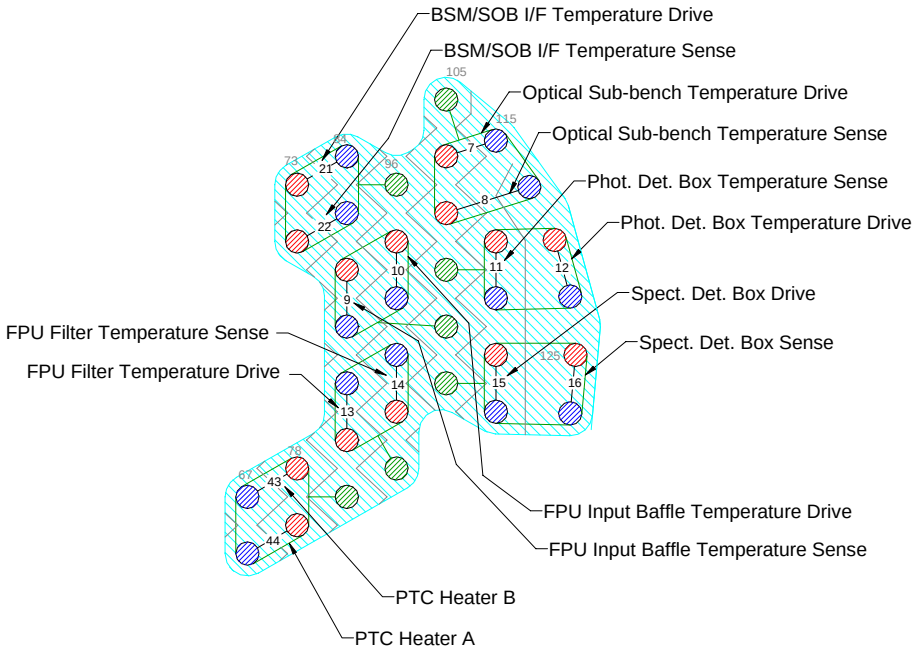

FPU Thermometry (FPU P23)

Cooler Tail Listing (FPU P19)

Function	37way P19	Max. current	Wire lay-up	Max Ohms	128Way #10
Sorption Pump temperature I+	20	1 µA	Insulated screened twisted quad	1000	29
Sorption Pump temperature V+	1	N/A		1000	41
Sorption Pump temperature V-	2	N/A		1000	42
Sorption Pump temperature I-	21	1 µA		1000	30
Sorption Pump temperature shld	3	N/A		N/A	31
Evaporator temperature I+	22	250 nA	Insulated screened twisted quad	1000	77
Evaporator temperature V+	4	N/A		1000	66
Evaporator temperature V-	5	N/A		1000	65
Evaporator temperature I-	23	250 nA		1000	76
Evaporator temperature shld	24	N/A		N/A	54
Sorption Pump Heat Switch temperature I+	25	1 µA	Insulated screened twisted quad	1000	53
Sorption Pump Heat Switch temperature V+	6	N/A		1000	64
Sorption Pump Heat Switch temperature V-	7	N/A		1000	63
Sorption Pump Heat Switch temperature I-	26	1 µA		1000	52
Sorption Pump Heat Switch temperature shld	8	N/A		N/A	75
Evaporator Heat Switch temperature I+	27	1 µA	Insulated screened twisted quad	1000	50
Evaporator Heat Switch temperature V+	9	N/A		1000	62
Evaporator Heat Switch temperature V-	10	N/A		1000	51
Evaporator Heat Switch temperature I-	28	1 µA		1000	61
Evaporator Heat Switch temperature shld	29	N/A		N/A	39
Thermal Shunt temperature I+_A	30	1 µA	Insulated screened twisted quad	1000	11
Thermal Shunt temperature V+_B	11	N/A		1000	19
Thermal Shunt temperature V- _A	12	N/A		1000	18
Thermal Shunt temperature I- _B	31	1 µA		1000	10
Thermal Shunt temperature shld	13	N/A		N/A	20
Sorption Pump Heater I+_A	14	25 mA	twisted quad	10	6
Sorption Pump Heater I+_B	32	25 mA		10	13
Sorption Pump Heater I-_A	15	25 mA		10	5
Sorption Pump Heater I-_B	33	25 mA		10	12
Sorption Pump Heat Switch Heater I+_A	16	1.5 mA	twisted quad	50	22
Sorption Pump Heat Switch Heater I+_B	34	1.5 mA		50	33
Sorption Pump Heat Switch Heater I-_A	17	1.5 mA		50	21
Sorption Pump Heat Switch Heater I-_B	35	1.5 mA		50	32
Evaporator Heat Switch Heater I+_A	18	1.5 mA	twisted quad	50	55
Evaporator Heat Switch Heater I+_B	36	1.5 mA		50	56
Evaporator Heat Switch Heater I-_A	19	1.5 mA		50	43
Evaporator Heat Switch Heater I-_B	37	1.5 mA		50	44

32 wires and 5 temperature sensor signal shield

Spectrometer Stimulus Tail Listing (FPU P21)

Function	37way P21	Max. current	Wire lay-up	Max Ohms	128Way #10
HS Spect. 4% temperature I+	5	1 µA	Insulated screened twisted quad	1000	111
HS Spect. 4% temperature V+	6	N/A		1000	120
HS Spect. 4% temperature V-	24	N/A		1000	128
HS Spect. 4% temperature I-	25	1 µA		1000	112
HS Spect. 4% temperature shld*	23	N/A		N/A	121
HS Spect. 2% temperature I+	7	1 µA	Insulated screened twisted quad	1000	91
HS Spect. 2% temperature V+	8	N/A		1000	92
HS Spect. 2% temperature V-	26	N/A		1000	81
HS Spect. 2% temperature I-	27	1 µA		1000	80
HS Spect. 2% temperature shld*	9	N/A		N/A	93
HS Spect. Stim Flange temperature I+	10	1 µA	Insulated screened twisted quad	1000	114
HS Spect. Stim Flange temperature V+	11	N/A		1000	113
HS Spect. Stim Flange temperature V-	28	N/A		1000	103
HS Spect. Stim Flange temperature I-	29	1 µA		1000	104
HS Spect. Stim Flange temperature shld*	30	N/A		N/A	102
HS Spect. 4% Heater I+_A	14	9 mA	Twisted quad	30	35
HS Spect. 4% Heater I+_B	15	9 mA		30	24
HS Spect. 4% Heater I-_A	33	9 mA		30	34
HS Spect. 4% Heater I-_B	34	9 mA		30	23
HS Spect. 2% Heater I+_A	16	7 mA	Twisted quad	30	46
HS Spect. 2% Heater I+_B	17	7 mA		30	58
HS Spect. 2% Heater I-_A	35	7 mA		30	45
HS Spect. 2% Heater I-_B	36	7 mA		30	57

20 wires + 1 temperature sensor signal shield

FPU Thermometry Listing

Function	37way P23	Max. current	Wire lay-up	Max Ohms	128Way #10
FPU Filter temperature I+	20	1 µA	Insulated screened twisted quad	1000	89
FPU Filter temperature V+	2	N/A		1000	100
FPU Filter temperature V-	3	N/A		1000	99
FPU Filter temperature I-	21	1 µA		1000	88
FPU Filter temperature shld	1	N/A		N/A	101
Spectrometer Det. Box temperature I+	4	1 µA	Insulated screened twisted quad	1000	118
Spectrometer Det. Box temperature V+	23	N/A		1000	125
Spectrometer Det. Box temperature V-	24	N/A		1000	126
Spectrometer Det. Box temperature I-	5	1 µA		1000	119
Spectrometer Det. Box temperature shld	22	N/A		N/A	110
Photometer Det. Box temperature I+	25	1 µA	Insulated screened twisted quad	1000	123
Photometer Det. Box temperature V+	7	N/A		1000	116
Photometer Det. Box temperature V-	8	N/A		1000	117
Photometer Det. Box temperature I-	26	1 µA		1000	124
Photometer Det. Box temperature shld	6	N/A		N/A	108
Optical Subench temperature I+	9	1 µA	Insulated screened twisted quad	1000	106
Optical Subench temperature V+	28	N/A		1000	107
Optical Subench temperature V-	29	N/A		1000	122
Optical Subench temperature I-	10	1 µA		1000	115
Optical Subench temperature shld	27	N/A		N/A	105

HSFPU Input Baffle temperature I+	30	1 µA	Insulated screened twisted quad	1000	97
HSFPU Input Baffle temperature V+	12	N/A		1000	86
HSFPU Input Baffle temperature V-	13	N/A		1000	87
HSFPU Input Baffle temperature I-	31	1 µA		1000	98
HSFPU Input Baffle temperature shld	11	N/A		N/A	109
BSM/SOB I/F temperature I+	14	1 µA	Insulated screened twisted quad	1000	73
BSM/SOB I/F temperature V+	33	N/A		1000	74
BSM/SOB I/F temperature V-	34	N/A		1000	85
BSM/SOB I/F temperature I-	15	1 µA		1000	84
BSM/SOB I/F temperature shld	32	N/A		N/A	96
PTC Heater I+_A	17	2mA	Insulated screened twisted quad	100	79
PTC Heater I+_B	18	2 mA		100	78
PTC Heater I-_A	36	2 mA		100	68
PTC Heater I-_B	37	2 mA		100	67
PTC Heater shld.	35	N/A		N/A	90

Total contacts 28 wires and 7 shields

4.4.11 C11 CVV11 to HSFPU DRV-P

Overall Mechanical Drawing

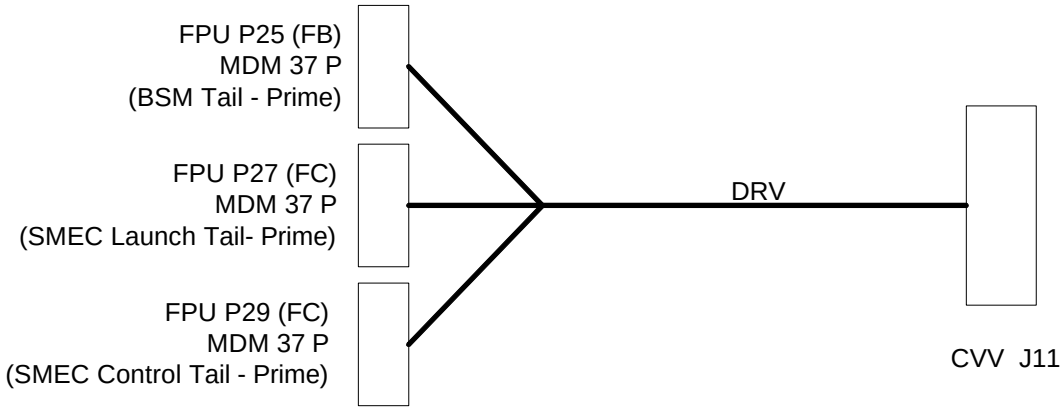

Connector/Backshell Details

MDM 37 P + Glenair 507 - T - 196 - M - 37	to	FPU J25	FB - BSM (P)
MDM 37 P + Glenair 507 - T - 186 - M - 37	to	FPU J27	FC - SMEC Launch (P)
MDM 37 P + Glenair 507 - T - 196 - M - 37	to	FPU J29	FC - SMEC Control (P)

Harness Layup

BSM Tail

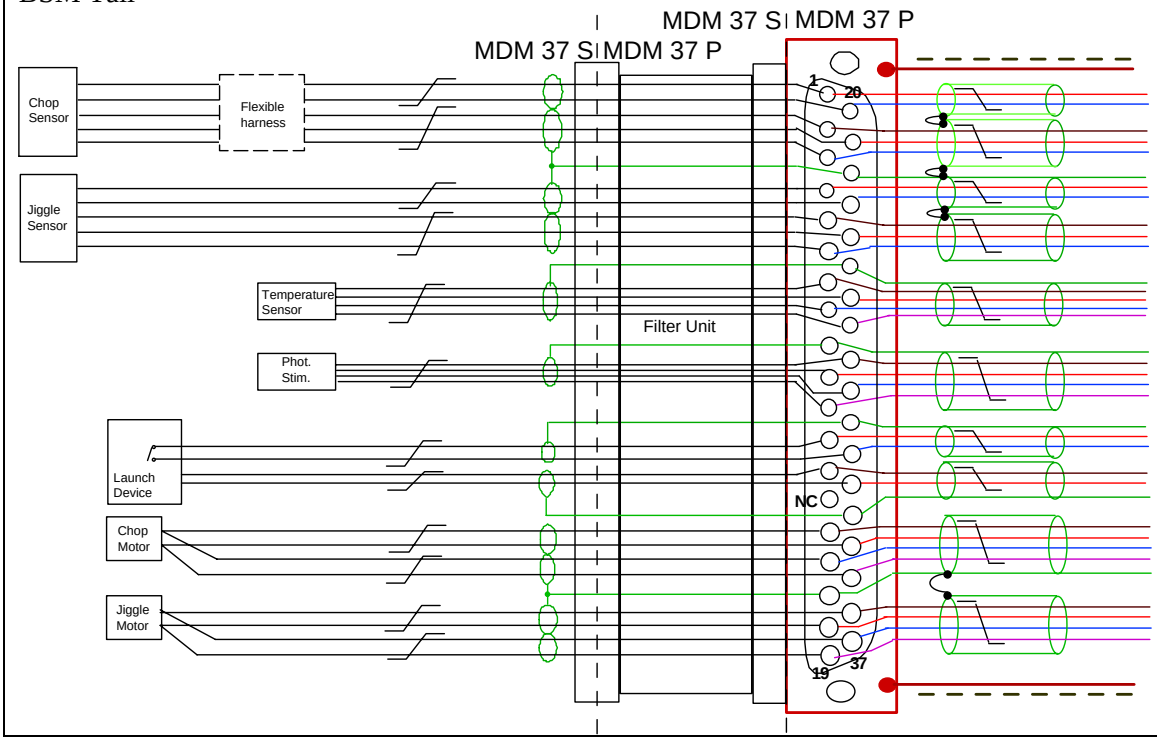

SMEC Launch/Thermal Tail

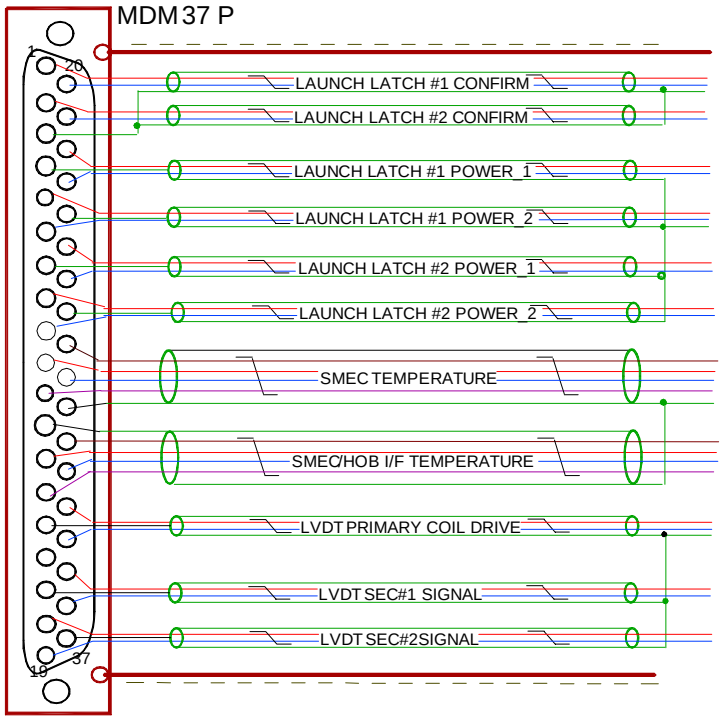

SMEC Launch/Thermal Tail

9(6) insulated screened twisted pairs and 2 insulated screenedtristed quads.

The whole overlain with RF screen shown: ——— NOT joined to backshell CVV end.

Dotted outer lines show insulation, probably put around bundles but only strictly needed at clamp points.

26 (20) signal pins + 4 signal grounds+ harness screeen at 100way

SMEC Control Tail

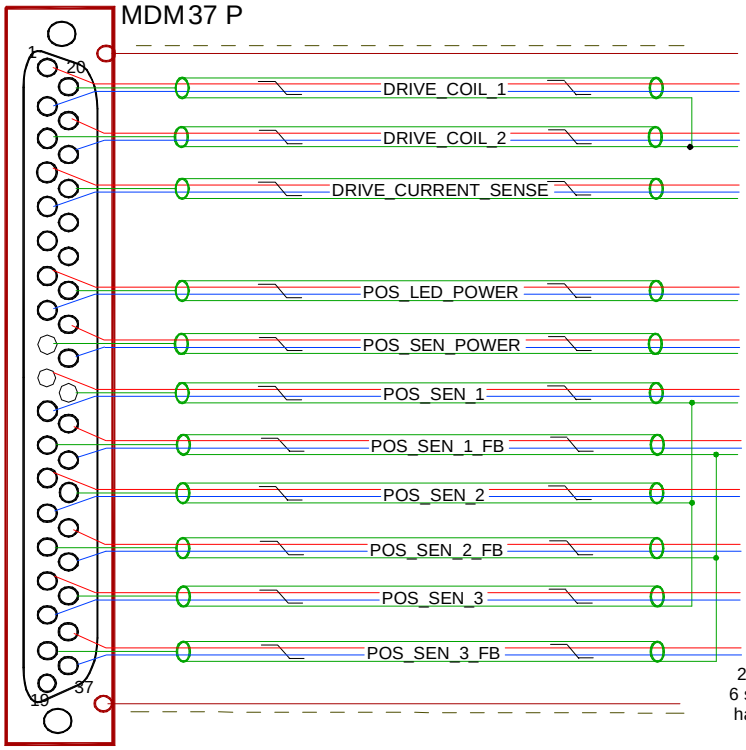

SMEC Control Tail

11 insulated screened twisted pairs.

The whole overlain with RF screen shown: ——— NOT joined to backshell CVV end.

Dotted lines show insulation, probably put around bundles but only strictly needed at clamp points.

22 signal pins + 6 signal grounds+ harness screeen at 100way

CVV C11 128-Way Pin Allocations (View of wiring side of connector)

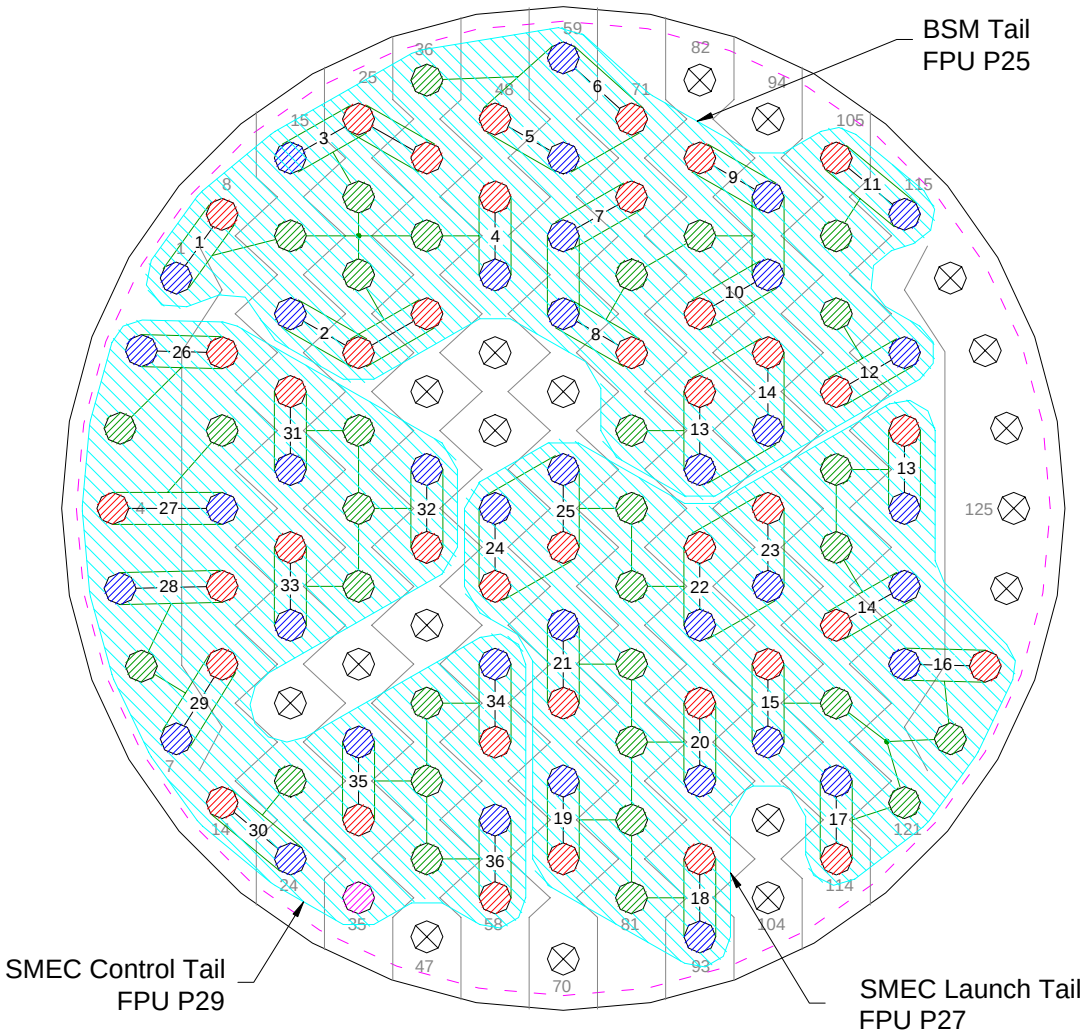

- Bolometer Signal +
- Bolometer Signal -
- Signal Ground
- FPU Faraday Shield Link
- No Connection
- Harness Bundle

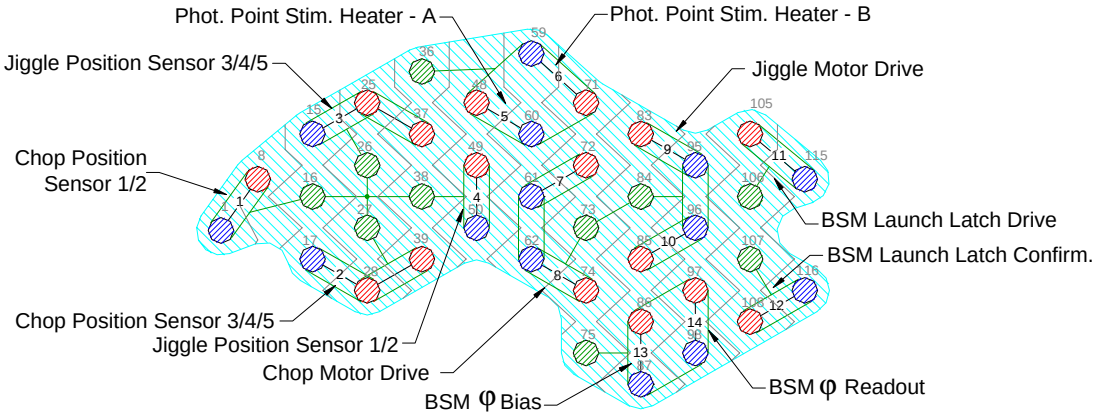

BSM Tail
FPU (P25)

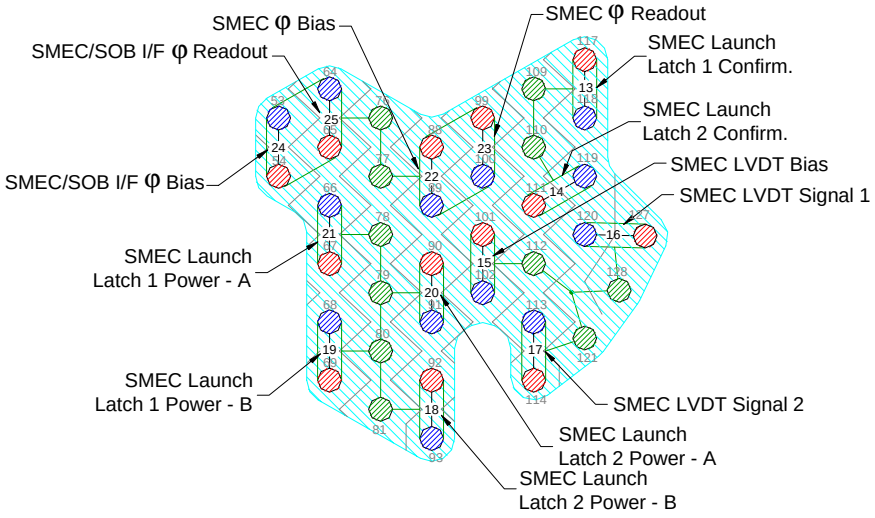

SMEC Launch Tail
FPU (P27)

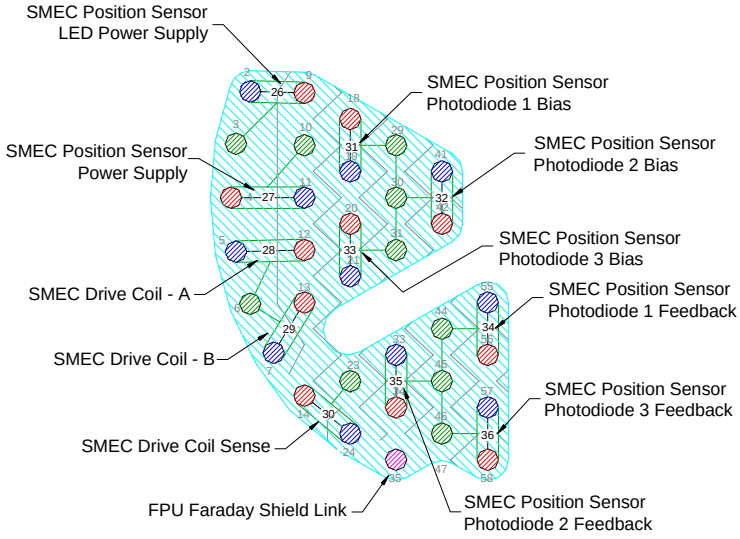

SMEC Control Tail
FPU (P29)

BSM Tail Listing (FPU P25)

Function	37way P25	Max. current	Wire lay-up	Max Ohms	128Way #11
Chop Position Sensor 1	1	1 µA	Insulated screened twisted pair	1000	8
Chop Position Sensor 2	20	N/A		1000	1
Chop Position Sensor shld1	to A	N/A		N/A	16 & Linked to 26, 27 & 38
Chop Position Sensor 3	2	250 nA	Insulated screened twisted triple	1000	39
Chop Position Sensor 4	21	N/A		1000	28
Chop Position Sensor 5	3	N/A		1000	17
Chop Position Sensor shld2=A	22	N/A		N/A	27 & Linked to 16, 26 & 38
Jiggle Position Sensor 1	4	1 µA	Insulated screened twisted pair	1000	49
Jiggle Position Sensor 2	23	N/A		1000	50
Jiggle Position Sensor shld1	to B	N/A		N/A	38 & Linked to 26, 27 & 16
Jiggle Position Sensor 3	5	250nA	Insulated screened twisted triple	1000	15
Jiggle Position Sensor 4	24	N/A		1000	25
Jiggle Position Sensor 5	6	N/A		1000	37
Jiggle Position Sensor shld2=B	22	N/A		N/A	26 & Linked to 16, 27 & 38
BSM temperature I+	7	1 µA	Insulated screened twisted quad	1000	86
BSM temperature V+	26	N/A		1000	97
BSM temperature V-	8	N/A		1000	98
BSM temperature I-	27	1 µA		1000	87
BSM temperature shld	25	N/A		N/A	75
Photometer Point Stim. Heater I+_A	28	7mA	Insulated screened twisted quad	10	48
Photometer Point Stim.Heater I+_B	10	7mA		10	71
Photometer Point Stim.Heater I-_A	29	7mA		10	60
Photometer Point Stim.Heater I-_B	11	7mA		10	59
Photometer Point Stim.Heater shld	9	N/A		N/A	36
BSM Launch latch confirmation 1	30	1mA	Insulated screened twisted pair	1000	108
BSM Launch latch confirmation 2	12	1mA		1000	116
Launch latch conf. shld to platform gnd	31	N/A		N/A	107
BSM Launch latch drive +	13	35mA	Insulated screened twisted pair	10	105
BSM Launch latch drive -	32	35mA		10	115
BSM Launch latch drive shld	33	N/A		N/A	106
Chop Motor Drive 1	15	40 mA	Insulated screened twisted quad	10	72
Chop Motor Drive 2	34	40 mA		10	61
Chop Motor Drive 3	16	40 mA		10	62
Chop Motor Drive 4	35	40 mA		10	74
Chop Motor Drive shld	17	N/A		N/A	73 and Linked to 84
Jiggle Motor Drive 1	36	40 mA	Insulated screened twisted quad	10	83
Jiggle Motor Drive 2	18	40 mA		10	95
Jiggle Motor Drive 3	37	40 mA		10	96
Jiggle Motor Drive 4	19	40 mA		10	85
Jiggle Motor Drive shld	17	N/A		N/A	84 and Linked to 73

This 37way connector is has 36 ways populated.

Commoning the Launch Latch Drive shield with that of the motor drives and reassigning launch latch drive 3 would give the BSM a slightly messy 2 wire cryoharness "contingency".

The photometer point stimulus Heater shield may be denied a contact on the 128Way depending on demand by the SMEC tails, TBC. In which case, and only this case, it would be grounded in the BSM.

SMEC Launch/Therm.Tail Listing (FPU P27)

Function	37way P27	Max. current	Wire lay-up	Max Ohms	128Way #11
SMEC launch latch # 1 confirmation +	1	1 mA	Insulated screened twisted pair	5	117
SMEC launch latch # 1 confirmation -	20	1 mA		5	118
SMEC launch latch # 1 confirmation Shield	3	N/A		N/A	109 A [noisy SVM]
SMEC launch latch # 2 confirmation + TBC	2	1 mA	Insulated screened twisted pair	5	111
SMEC launch latch # 2 confirmation - TBC	21	1 mA		5	119
SMEC launch latch # 2 confirmation Shld TBC	3	N/A		N/A	110 A[noisy SVM]
SMEC launch latch #1 power supply_1	21	400 mA / 50ms	Insulated screened twisted pair	5	67
SMEC launch latch #1 power return_1	22	400 mA / 50ms		5	66
SMEC launch latch #1 power Shield_1	4	N/A		N/A	B (78)
SMEC launch latch #1 power supply_2	5	400 mA / 50ms	Insulated screened twisted pair	5	69
SMEC launch latch #1 power return_2	6	400 mA / 50ms		5	68
SMEC launch latch #1 power Shield_2	23	N/A		N/A	B (80)
SMEC launch latch #2 power supply_1	24	400 mA / 50ms	Insulated screened twisted pair	5	90
SMEC launch latch #2 power return_1	25	400 mA / 50ms		5	91
SMEC launch latch #2 power Shield_1	7	N/A		N/A	B (79)
SMEC launch latch #2 power supply_2 TBC	8	400 mA / 50ms	Insulated screened twisted pair	5	92
SMEC launch latch #2 power return_2 TBC	9	400 mA / 50ms		5	93
SMEC launch latch #2 power Shield_2 TBC	26	N/A		N/A	B (81)
SMEC temperature I+	27	1 µA	Insulated screened twisted quad	1000	88
SMEC temperature V+	10	N/A		1000	99
SMEC temperature V-	28	N/A		1000	100
SMEC temperature I-	11	1 µA		1000	89
SMEC temperature shld	29	N/A		N/A	C
SMEC/SOB I/F temperature I+	30	1 µA	Insulated screened twisted quad	1000	54
SMEC/SOB I/F temperature V+	13	N/A		1000	65
SMEC/SOB I/F temperature V-	31	N/A		1000	64
SMEC/SOB I/F temperature I-	14	1 µA		1000	53
SMEC/SOB I/F temperature shld	12	N/A		N/A	C
SMEC LVDT primary coil power supply (P)	32	5 mA	Insulated screened twisted pair	5	101
SMEC LVDT primary coil power supply (N)	33	5 mA		5	102
SMEC LVDT primary coil power supply Shld	15	N/A		N/A	D (112)
SMEC LVDT secondary coil # 1signal (P)	35	50 µA	Insulated screened twisted pair	5	127
SMEC LVDT secondary coil # 1 signal (N)	36	50 µA		5	120
SMEC LVDT secondary coil # 1 signal Shield	17	N/A		N/A	D (128)
SMEC LVDT secondary coil # 2 signal (P)	18	50 µA	Insulated screened twisted pair	5	114
SMEC LVDT secondary coil # 2 signal (N)	19	50 µA		5	113
SMEC LVDT secondary coil # 2 signal Shield	37	N/A		N/A	D (121)

31 contacts used

SMEC Control Tail Listing (FPU J29)

Function	37way J29	Max. current	Wire lay-up	Max Ohms	128Way #11
SMEC Drive Coil I+	1	100mA	Insulated screened twisted pair	5	12
SMEC Drive Coil I-	2	100mA		5	5
SMEC Drive Coil shld	20	N/A		N/A	A (6)
SMEC Drive Coil (Rob) I+	21	100mA	Insulated screened twisted pair	5	13
SMEC Drive Coil (Rob) I-	22	100mA		5	7
SMEC Drive Coil (Rob) shld	3	N/A		N/A	A (6)
SMEC Drive Coil Sense+	4	10 µA	Insulated screened twisted pair	500	14
SMEC Drive Coil Sense-	5	10 µA		500	24
SMEC Drive Coil shld	23	N/A		N/A	23
SMEC position sensor Led power supply	7	1mA	Insulated screened twisted pair	100	9
SMEC position sensor Led power return	8	1mA		100	2
SMEC position sensor Led power Shield	26	N/A		N/A	3
SMEC position sensor power supply	27	1mA	Insulated screened twisted pair	100	11
SMEC position sensor power return	28	1mA		100	4
SMEC position sensor power Shield	9	N/A		N/A	10
SMEC position sensor photodiode #1 I+	10	20 µA	Insulated screened twisted pair	1000	18
SMEC position sensor photodiode #1 I-	11	20 µA		1000	19
SMEC position sensor photodiode Shield	29	N/A		N/A	B (29)
SMEC pos. sensor photodiode #1 feedback +	30	10 µA	Insulated screened twisted pair	1000	56
SMEC pos. sensor photodiode #1 feedback -	31	10 µA		1000	55
SMEC pos. sensor photodiode feedback Shld	12	N/A		N/A	C (44)
SMEC position sensor photodiode #2 I+	13	20 µA	Insulated screened twisted pair	1000	42
SMEC position sensor photodiode #2 I-	14	20 µA		1000	41
SMEC position sensor photodiode Shield	32	N/A		N/A	B (30)
SMEC pos. sensor photodiode #2 feedback +	33	10 µA	Insulated screened twisted pair	1000	34
SMEC pos. sensor photodiode #2 feedback -	34	10 µA		1000	33
SMEC pos. sensor photodiode feedback Shld	15	N/A		N/A	C (45)
SMEC position sensor photodiode #3 I+	16	20 µA	Insulated screened twisted pair	1000	20
SMEC position sensor photodiode #3 I-	17	20 µA		1000	21
SMEC position sensor photodiode Shield	35	N/A		N/A	B (31)
SMEC pos. sensor photodiode #3 feedback +	36	10 µA	Insulated screened twisted pair	1000	58
SMEC pos. sensor photodiode #3 feedback -	37	10 µA		1000	57
SMEC pos. sensor photodiode feedback Shld	18	N/A		N/A	C (46)

29 contacts used.

Total used through 128 Way = 36 + 31+ 29 = 96.

SMEC above based on "Cryo_harness_010906.doc".

4.4.12 C12 CVV12 to HSFPU AUX-R

Overall Mechanical Drawing

Redundant version of C10, and the same as it

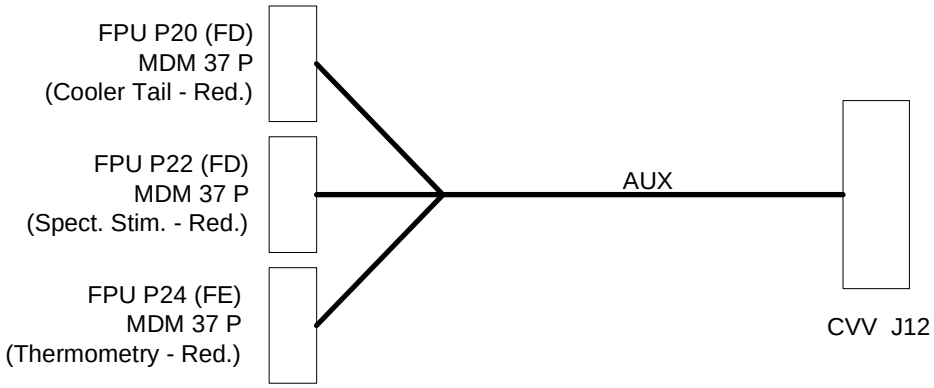

SPIRE C12

Connector/Backshell Details

Redundant side harness

MDM 37 P	+ Glenair 507-T-139-M-37	to	FPU J20	FD - Cooler (R)
MDM 37 P	+ Glenair 507-T-139-M-37	to	FPU J22	FD - Spect. Stim (R)
MDM 37 P	+ Glenair 507-T-139-M-37	to	FPU J24	FE - Therm. (R)

Harness Layup

Redundant/identical version of C10

Add one to all the connector numbers compared to C10.

4.4.13 C13 CVV13 to HSFPU DRV-R

Overall Mechanical Drawing

Format as C11, maybe differing length.

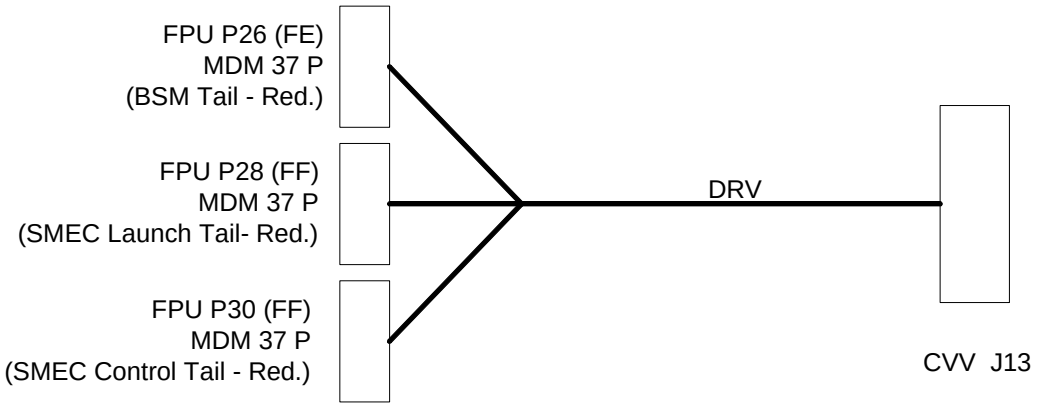

SPIRE C13

Connector/Backshell Details

Redundant side harness

MDM 37 P + Glenair 507 - T - 139 - M - 37 - F - H	to	FPU J26	FE - BSM (R)
MDM 37 P + Glenair 507 - T - 139 - M - 37 - F - H	to	FPU J28	FF - SMEC Launch (R)
MDM 37 P + Glenair 507 - T - 139 - M - 37 - F - H	to	FPU J30	FF - SMEC Control (R)

Harness Layup

As C11.

Contact Details

As C11, but add one to all the connector numbers compared to C11.

4.5 FPU Harnesses

4.5.1 F1 PSW J01 to HSJFP J29

Harnesses F1 thru F6 passing from HSJFP to the PSW BDA are potted into a single feedthru mounted on the FPU Photometer Connector Bracket as illustrated below in the mechanical drawing.

Overall Mechanical Drawing

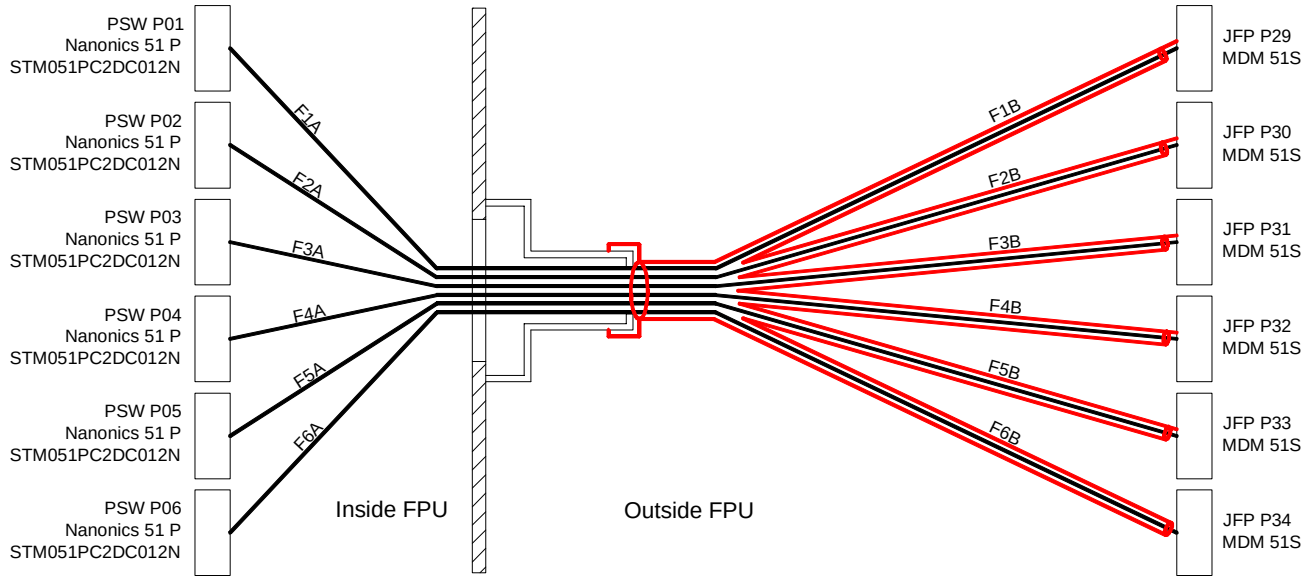

JPL configured Photometer BDA lead, maintaining Faraday cage HSJFP to FPU, and keeping signal ground separate from chassis ground. Sequence of harnesses through flange subject to detailed design.

Connector/Backshell Details
A section: Nanonics STM50PC2DC012N with non RF-tight, potted backshell
B section: MDM51S with RF-tight, potted backshell

Harness Layup
B section requires outer RF shield, **A** section does not.
B section may have thermal heatsink attachments, TBD.

Length and tie-downs optimised to minimise capacitance and microphony.
Consists of 6 x 12-ax, each carrying 4 channels, making 24 channels in all plus a screened twisted pair for bias. Careful control of those screens that cannot have their own contact assignment.

Contact Details

Function	MDM51 contact	Cable	Nanonics contact
Channel A +	35	12-ax	1
Channel A -	51		26
Channel Agnd	To 12-ax shield one end		To 12-ax shield one end
Channel B +	17		2
Channel B -	18		27
Channel Bgnd	To 12-ax shield one end		To 12-ax shield one end
Channel C +	15		3
Channel C -	16		28
Channel Cgnd	To 12-ax shield one end		To 12-ax shield one end
Channel D +	34		4
Channel D -	50		29
Channel Dgnd	To 12-ax shield one end		To 12-ax shield one end

Function	MDM51 contact	Cable	Nanonics contact
Channel E +	33		5
Channel E -	49		30
Channel Egnd	To 12-ax shield one end		To 12-ax shield one end
Channel F +	13		6
Channel F -	14		31
Channel Fgnd	To 12-ax shield one end	12-ax	To 12-ax shield one end
Channel G +	32		7
Channel G -	48		32
Channel Ggnd	To 12-ax shield one end		To 12-ax shield one end
Channel H +	31		8
Channel H-	47		33
Channel Hgnd	To 12-ax shield one end		To 12-ax shield one end
Channel I +	30		9
Channel I-	46		34
Channel Ignd	To 12-ax shield one end		To 12-ax shield one end
Channel J +	29		10
Channel J-	45		35
Channel Jgnd	To 12-ax shield one end	12-ax	To 12-ax shield one end
Channel K +	28		11
Channel K -	44		36
Channel Kgnd	To 12-ax shield one end		To 12-ax shield one end
Channel L +	11		12
Channel L -	12		37
Channel Lgnd	To 12-ax shield one end		To 12-ax shield one end
Channel M +	27		13
Channel M-	43		38
Channel Mgnd	To 12-ax shield one end		To 12-ax shield one end
Channel N +	26		14
Channel N -	42		39
Channel Ngnd	To 12-ax shield one end	12-ax	To 12-ax shield one end
Channel P +	9		15
Channel P -	10		40
Channel Pgnd	To 12-ax shield one end		To 12-ax shield one end
Channel R +	25		16
Channel R-	41		41
Channel Rgnd	To 12-ax shield one end		To 12-ax shield one end
Channel S+	24		17
Channel S -	40		42
Channel Sgnd	To 12-ax shield one end		To 12-ax shield one end
Channel T+	7		18
Channel T -	8		43
Channel Tgnd	To 12-ax shield one end	12-ax	To 12-ax shield one end
Channel U +	23		19
Channel U -	39		44
Channel Ugnd	To 12-ax shield one end		To 12-ax shield one end
Channel V +	22		20
Channel V-	38		45
Channel Vgnd	To 12-ax shield one end		To 12-ax shield one end
Channel W +	5		21
Channel W -	6		46
Channel Wgnd	To 12-ax shield one end		To 12-ax shield one end
Channel X +	21		22
Channel X -	37		47
Channel Xgnd	To 12-ax shield one end	12-ax	To 12-ax shield one end
Channel Y +	20		23
Channel Y -	36		48

Function	MDM51 contact	Cable	Nanonics contact
Channel Ygnd	To 12-ax shield one end		To 12-ax shield one end
Channel Z+	3		24
Channel Z -	4		49
Channel Zgnd	To 12-ax shield one end		To 12-ax shield one end
Bias +	1		25
Bias_	2	STT	50
Bias gnd	19+commoned shlds		51+commoned shlds

N.B. None of the gnds./braids in the above shall be connected to backshell and hence chassis.

4.5.2 F2 PSW J02 to HSJFP J30

See §4.5.1 F1 PSW J01 to HSJFP

4.5.3 F3 PSW J03 to HSJFP J31

See §4.5.1 F1 PSW J01 to HSJFP

4.5.4 F4 PSW J04 to HSJFP J32

See §4.5.1 F1 PSW J01 to HSJFP

4.5.5 F5 PSW J05 to HSJFP J33

See §4.5.1 F1 PSW J01 to HSJFP

4.5.6 F6 PSW J06 to HSJFP J34

See §4.5.1 F1 PSW J01 to HSJFP

4.5.7 F7 PLW J01 to HSJFP J35

Overall Mechanical Drawing

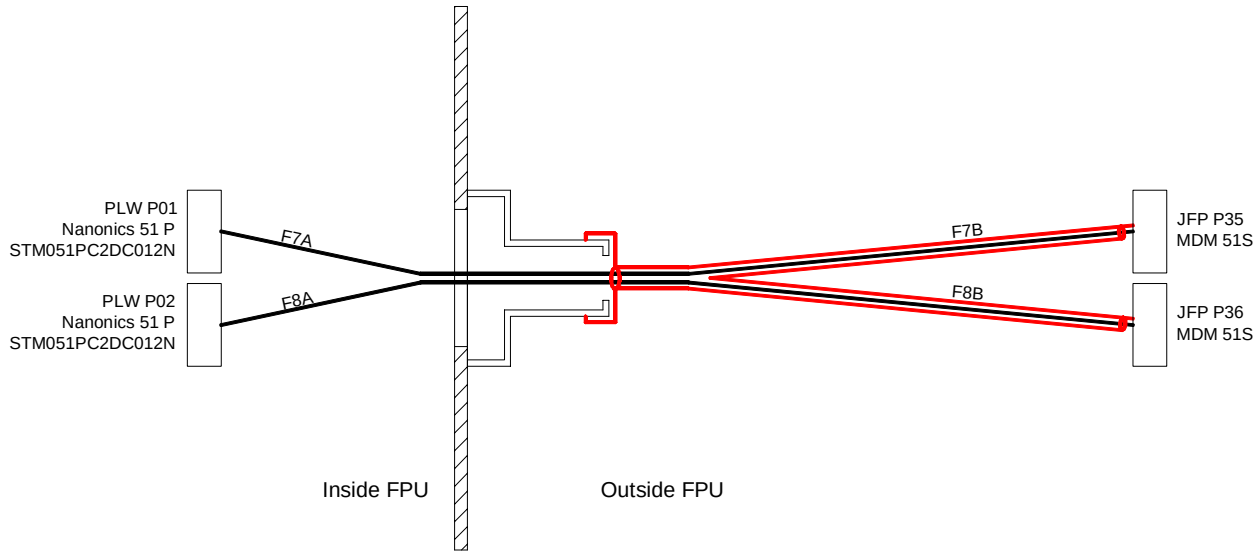

JPL configured Photometer BDA lead, maintaining Faraday cage HSJFP to FPU, and keeping signal ground separate from chassis ground. Sequence of harnesses through flange subject to detailed design.

Connector/Backshell Details
A section: Nanonics STM50PC2DC012N with non RF-tight, potted backshell
B section: MDM51S with RF-tight, potted backshell

Harness Layup
B section requires outer RF shield, **A** section does not.
B section may have thermal heatsink attachments, TBD.

As F1, length a variable

Contact Details

as F1

4.5.8 F8 PLW J02 to HSJFP J36

See §4.5.7 F7 PLW J01 to HSJFP

4.5.9 F9 PMW J01 to HSJFP J37

Overall Mechanical Drawing

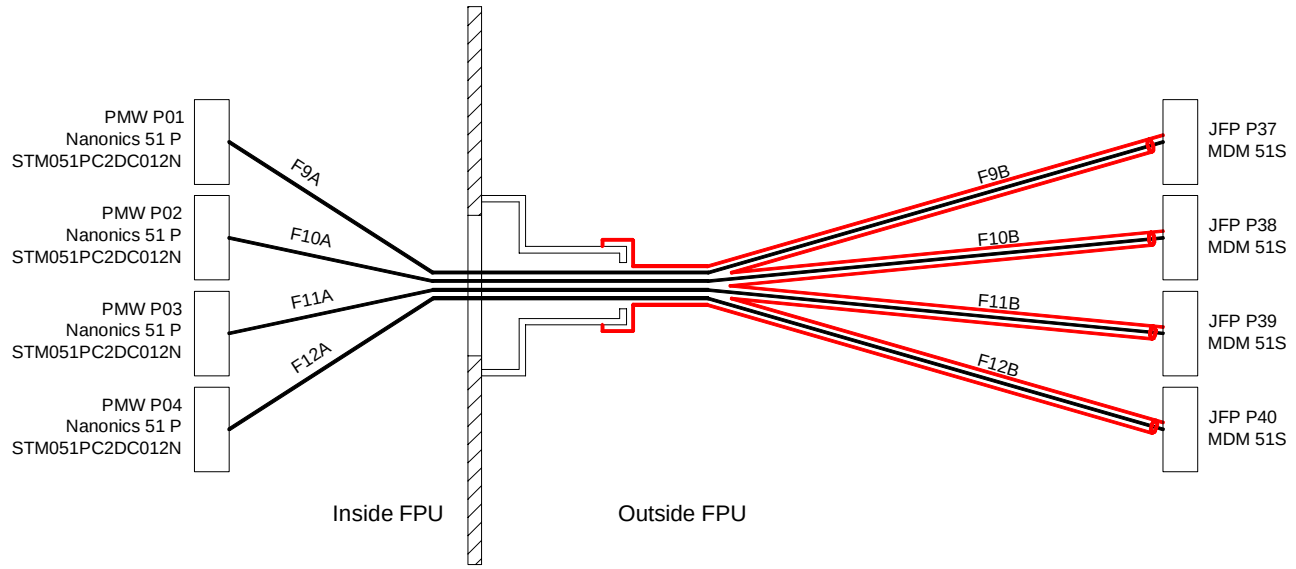

JPL configured Photometer BDA lead, maintaining Faraday cage HSJFP to FPU, and keeping signal ground separate from chassis ground. Sequence of harnesses through flange subject to detailed design.

Connector/Backshell Details
A section: Nanonics STM50PC2DC012N with non RF-tight, potted backshell
B section: MDM51S with RF-tight, potted backshell

Harness Layup
B section requires outer RF shield, **A** section does not.
B section may have thermal heatsink attachments, TBD.

As F1, length a variable

Contact Details

as F1

4.5.10 F10 PMW J02 to HSJFP to J38

See §4.5.9 F9 PMW J01 to HSJFP

4.5.11 F11 PLW J03 to HSJFP to J39

See §4.5.9 F9 PMW J01 to HSJFP

4.5.12 F12 PLW J04 to HSJFP to J40

See §4.5.9 F9 PMW J01 to HSJFP

4.5.13 F13 SSW J05 to HSJFS J11

Overall Mechanical Drawing

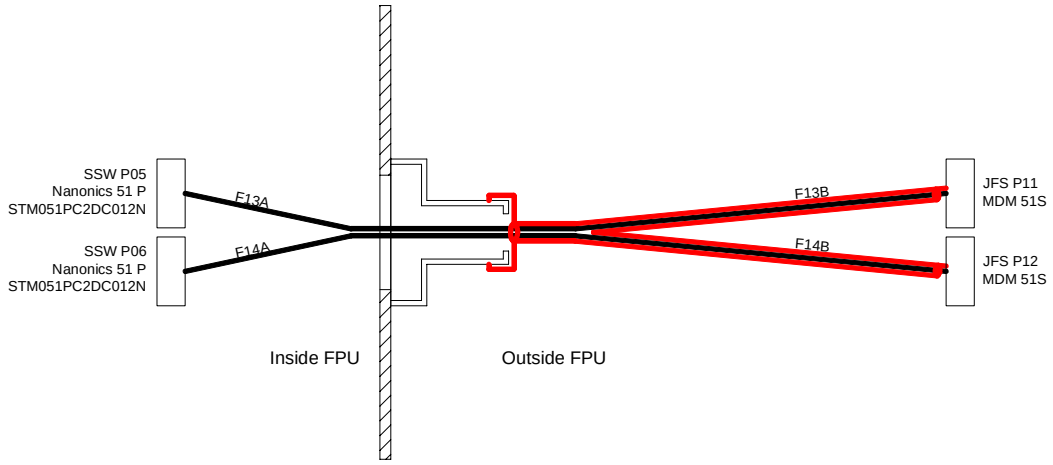

JPL configured Photometer BDA lead, maintaining Faraday cage HSJFP to FPU, and keeping signal ground separate from chassis ground. Sequence of harnesses through flange subject to detailed design.

Connector/Backshell Details
A section: Nanonics STM50PC2DC012N with non RF-tight, potted backshell
B section: MDM51S with RF-tight, potted backshell

Harness Layup
B section requires outer RF shield, **A** section does not.
B section may have thermal heatsink attachments, TBD.

As F1, length a variable

Contact Details

as F1

4.5.14 F14 SSW J06 to HSJFS J12

See §4.5.13 F13 SSW J05 to HSJFS J11

4.5.15 F15 SLW J01 to HSJFS J13

Overall Mechanical Drawing

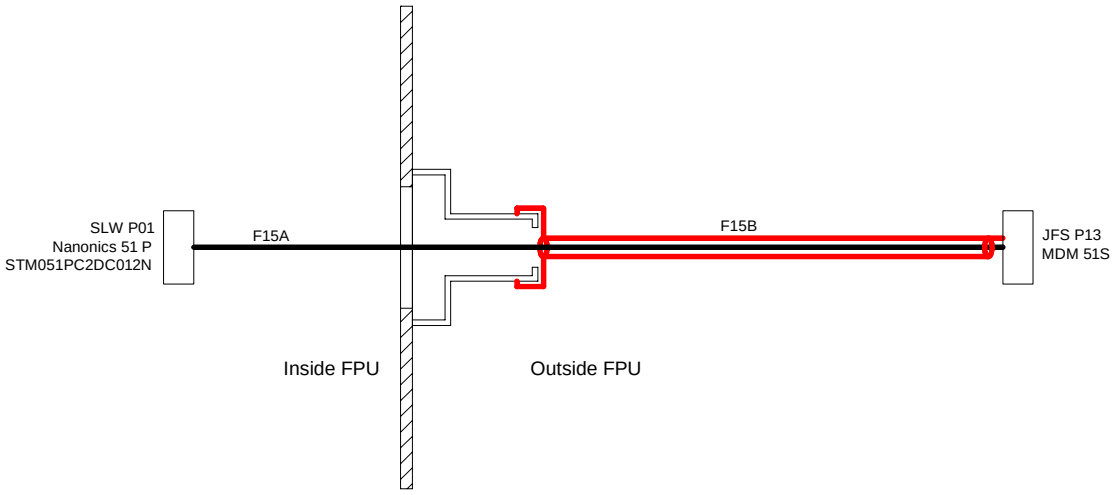

JPL configured Photometer BDA lead, maintaining Faraday cage HSJFP to FPU, and keeping signal ground separate from chassis ground.

Connector/Backshell Details
A section: Nanonics STM50PC2DC012N with non RF-tight, potted backshell
B section: MDM51S with RF-tight, potted backshell

Harness Layup
B section requires outer RF shield, **A** section does not.
B section may have thermal heatsink attachments, TBD.

As F1, length a variable

Contact Details

as F1

4.5.16 F16 COOLER-P to FA

Overall Mechanical Drawing

Connector/Backshell Details

FPU FA P1 Glenair 500-047 M 37
SCO P1 Glenair 500-047 M 37

Harness Layup

- As per C10 FPU P19
  - Five 30AWG Copper STQ,
  - Three 30AWG Copper UTQ (may be STQ if more convenient)
- EMI braid over harness bundle terminated at the backshells
- No overall harness insulation required

Contact Details

4.5.17 F17 COOLER-R to FD

Overall Mechanical Drawing

Connector/Backshell Details

FPU FD P1 Glenair 500-047 M 37
SCO P2 Glenair 500-E-010 M 37

Harness Layup

- As per C10 FPU P19
  - Five 30AWG Copper STQ,
  - Three 30AWG Copper UTQ (may be STQ if more convenient)
- EMI braid over harness bundle terminated at the backshells
- No overall harness insulation required

Contact Details

4.5.18 F18 SPECT_STIM-P to FA

Overall Mechanical Drawing

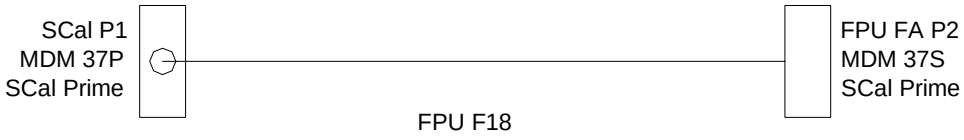

Connector/Backshell Details

FPU FA P2 Glenair 500-047 M 37
Scal P1Glenair 500-S-010 M 37

Harness Layup

- As per C10 FPU P21
  - Three 30 AWG Copper STQ
  - Two 30 AWG Copper UTQ (may be STQ if more convenient)
- EMI braid over harness bundle terminated at the backshells
- No overall harness insulation required

Contact Details

4.5.19 F19 SPECT_STIM-R to FD

Overall Mechanical Drawing

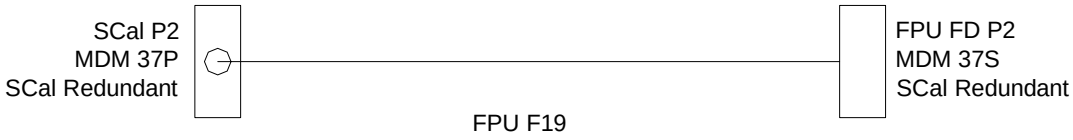

Connector/Backshell Details

FPU FA P2 Glenair 500-047 M 37
Scal P1Glenair 500-S-010 M 37

Harness Layup

- As per C10 FPU P21
  - Three 30 AWG Copper STQ
  - Two 30 AWG Copper UTQ (may be STQ if more convenient)
- EMI braid over harness bundle terminated at the backshells
- No overall harness insulation required

Contact Details

4.5.20 F20 THERM-P from FB

Overall Mechanical Drawing

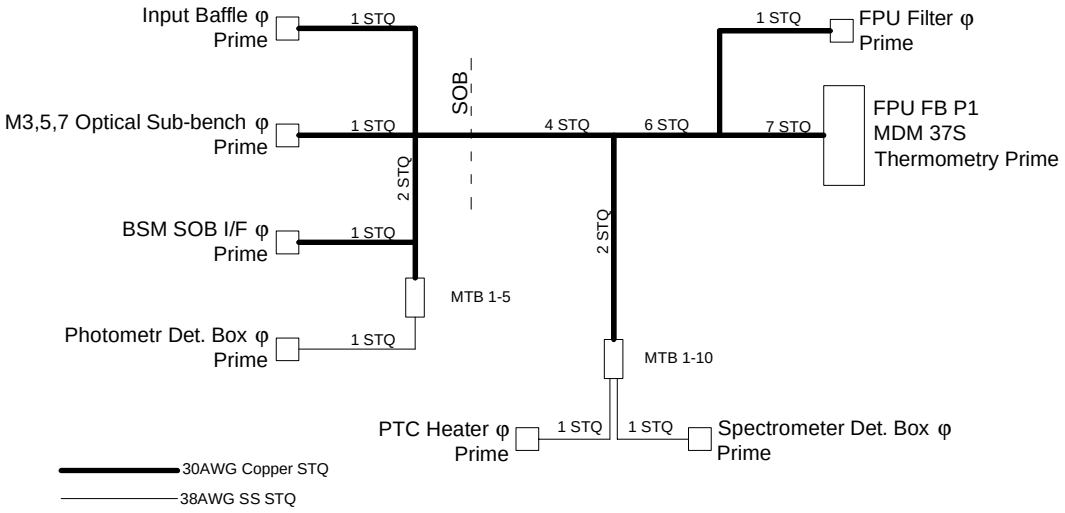

FPU F20

Connector/Backshell Details

FPU FB P1 Glenair 500-T-010 M 37
+ Cannon ITT MTB 1-5
+ Cannon ITT MTB 1-10
+ Cernox four wire thermistors with flying leads
+ Four wire heater

Harness Layup

- As per C10 FPU P23
  - Seven 28 AWG Copper STQ
  - Three of these become 38 AWG Stainless STQ
- EMI braid over harness bundle terminated at the backshells
- No overall harness insulation required

Contact Details

4.5.21 F21 THERM-R from FE

Overall Mechanical Drawing

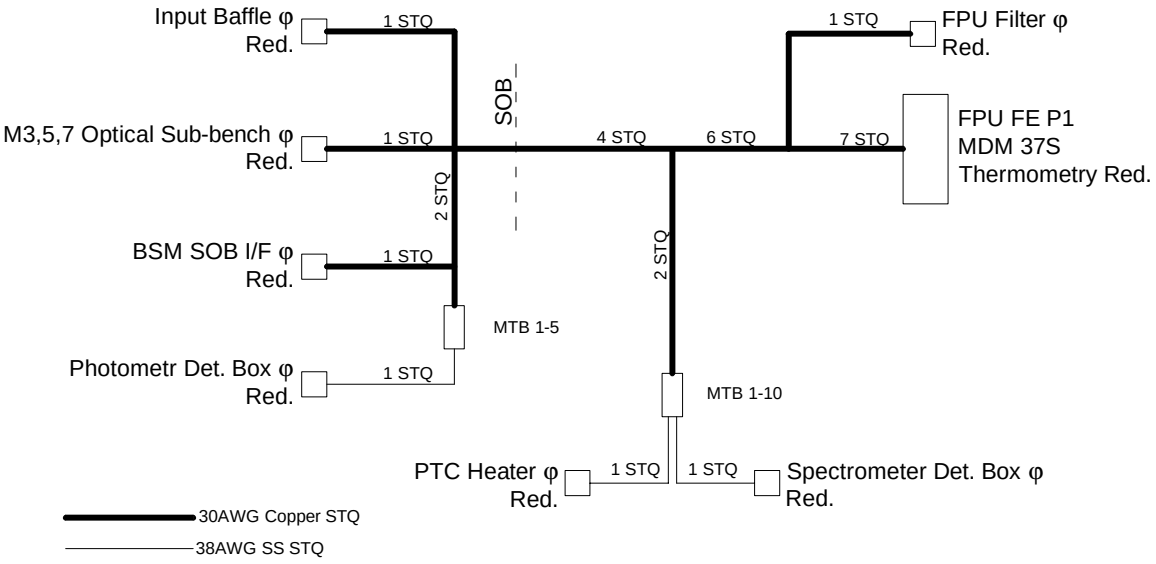

FPU F21

Connector/Backshell Details

FPU FE P1 Glenair 500-T-010 M 37
+ Cannon ITT MTB 1-5
+ Cannon ITT MTB 1-10
+ Cernox four wire thermistors with flying leads
+ Four wire heater

Harness Layup

- As per C10 FPU P23
  - Seven 28 AWG Copper STQ
  - Three of these become 38 AWG Stainless STQ
- EMI braid over harness bundle terminated at the backshells
- No overall harness insulation required

Contact Details

4.5.22 F22 BSM-P to FB

Overall Mechanical Drawing

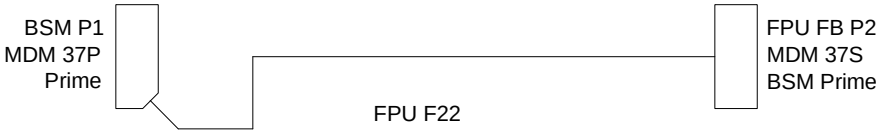

Connector/Backshell Details

FPU FB P2 Glenair 500-T-010 M 37
BSM P1 Glenair 500-E-010 M 37

Harness Layup

- As per C11 FPU P25
  - 4 30AWG Copper STP
  - 4 30 AWG Copper STQ
  - 2 30 AWG Copper STT
- EMI braid over harness bundle terminated at the backshells
- No overall harness insulation required

Contact Details

4.5.23 F23 BSM-R to FE

Overall Mechanical Drawing

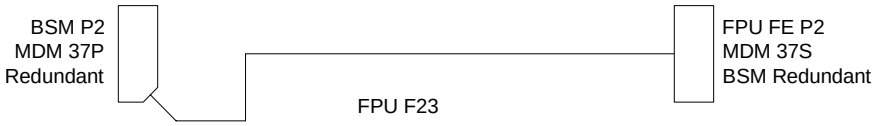

Connector/Backshell Details

FPU FE P2 Glenair 500-T-010 M 37
BSM P2 Glenair 500-E-010 M 37

Harness Layup

- As per C11 FPU P25
  - 4 30AWG Copper STP
  - 4 30 AWG Copper STQ
  - 2 30 AWG Copper STT
- EMI braid over harness bundle terminated at the backshells
- No overall harness insulation required

Contact Details

4.5.24 F24 SMEC Launch (Prime) connected to FPU FC J1

Overall Mechanical Drawing

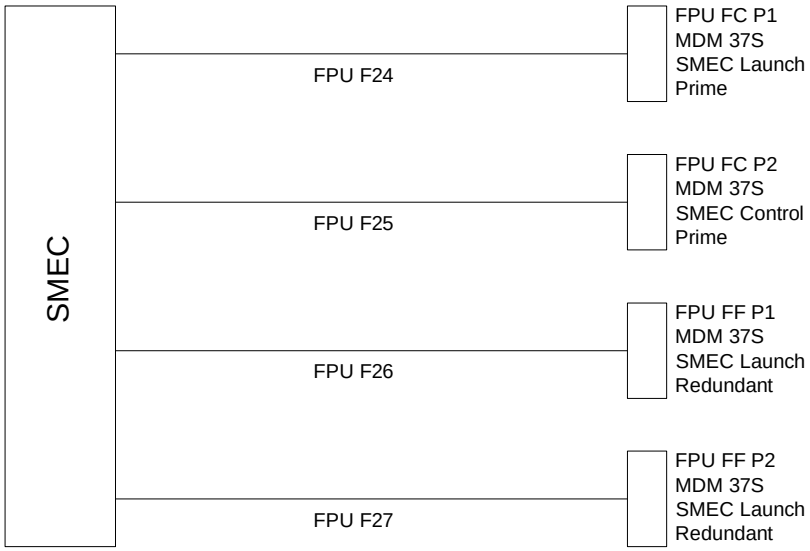

SMEC has four flying leads

Connector/Backshell Details

FPU FC P1 Glenair 500-T-010 M 37

Harness Layup

- As per C11 FPU P27
  - 9 30AWG Copper STP
  - 2 30AWG Copper STQ
- EMI braid over harness bundle terminated at the backshells
- No overall harness insulation required

Contact Details

4.5.25 F25 SMEC Control (Prime) connected to FPU FC J2

Overall Mechanical Drawing

See 4.5.24 - F24 SMEC Launch

Connector/Backshell Details

FPU FC P2 Glenair 500-T-010 M 37

Harness Layup

- As per C11 FPU P29
  - 11 30AWG STP
- EMI braid over harness bundle terminated at the backshells
- No overall harness insulation required

Contact Details

4.5.26 F26 SMEC Launch (Red.) connected to FPU FF J1

Overall Mechanical Drawing

See 4.5.24 F24 SMEC Launch

Connector/Backshell Details

FPU FF P1 Glenair 500-T-010 M 37

Harness Layup

- As per C11 FPU P27
  - 9 30AWG Copper STP
  - 2 30AWG Copper STQ
- EMI braid over harness bundle terminated at the backshells
- No overall harness insulation required

Contact Details

4.5.27 F27 SMEC Control (Red.) connected to FPU FF J2

Overall Mechanical Drawing

See 4.5.24 F24 SMEC Launch

Connector/Backshell Details

FPU FF P2 Glenair 500-T-010 M 37

Harness Layup

- As per C11 FPU P29
  - 11 30AWG STP
- EMI braid over harness bundle terminated at the backshells
- No overall harness insulation required

Contact Details

4.5.28 F28 Photometer Thermal Control to HSJFS J14

Overall Mechanical Drawing

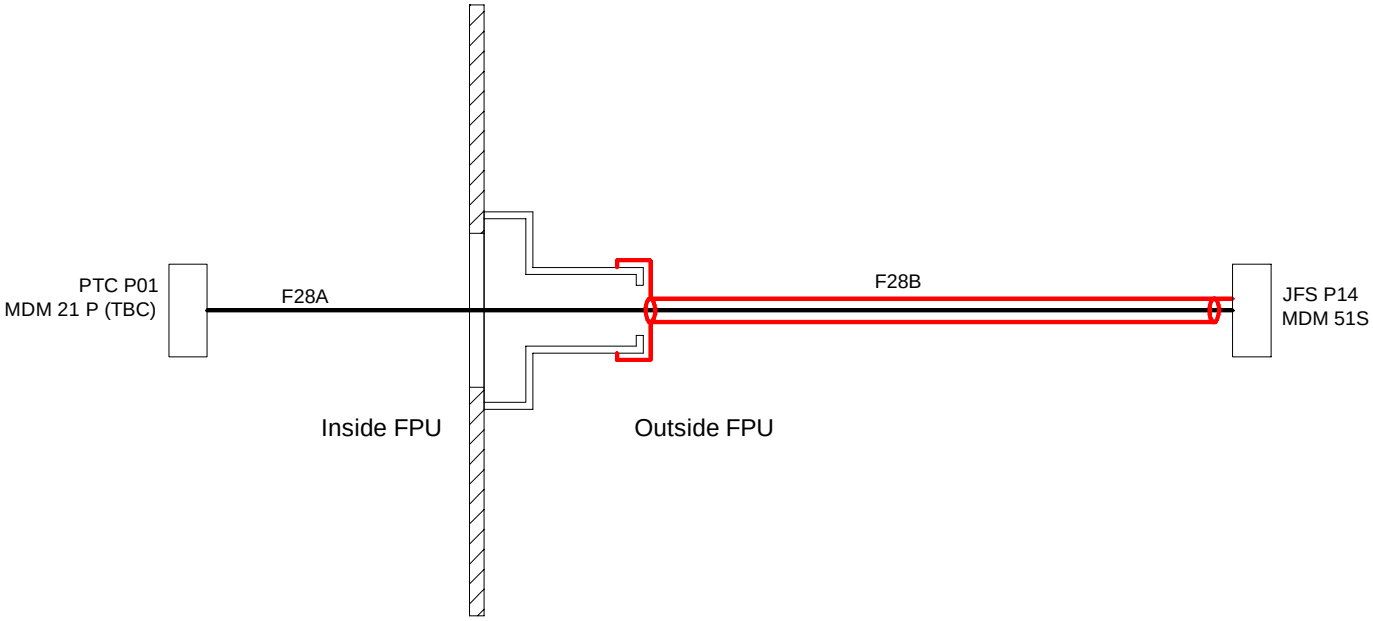

Connector/Backshell Details

21 Way MDM (TBC) to 51 Way MDM at JFS

Harness Layup

TBD

Contact Details

TBD

4.6 JFET unit Back-Harnesses

4.6.1 Overview

Updated to reflect removal of separate RF filter units from baseline as in Spire Instrument Block Diagram 3.1 and following.

The Bolometer Back Harness provides the routing of wires from the JFET membrane 15way "service" connectors into the 37way connectors on harnesses C3 and half of C1.

The JFET 15ways each provide 7 double-wired functions on 14 pins as follows, all DC isolated from ground in the JFET box chassis except for 1MOhm antistatic resistors:

Function	A-wire	B-wire	
JFET V +	10	14	These colour codes are carried through to the drawing below Values agree with 30/7/01 JPL review
JFET V-	1	8	
JFET Vgnd	9	15	
Bias +	2	7	
Bias -	4	5	
Heater +	3	6	
Heater -	11	13	

For the photometer, the 4 x 37 = 148 C3 harness contacts cannot accommodate all the 12 x 14 =168 contacts from the JFET boxes. However not all these possible 168 at the 37 way filters can proceed through the 100(128) ways available in the C3 harness. A similar situation applies for the spectrometer. Appropriate commoning is build into splices in the BS and BP harnesses as shown in the diagram that follows: JPL consider this acceptable in copper multistrand harness and it avoids adaptor modules.

There is no splicing of functionality in the C or I series cryoharnesses. [Note that as specified earlier herein inner screens are linked in groups to reduce noise and not every inner shield proceeds on to a contact].

The philosophy of deciding which how to common up the functions in these harnesses was decided in issue 0.3 of this document with a view to failure control. If the supposedly impossible happened and both the A and B wires of a particular function were to break, that function should not take out a complete BDA array. This is accomplished on 4 BDAs by allocating them more than a single function, whilst on the 5th, one, the small SLW BDA, there is enough spare pin capacity to double up the wiring again. This provides the HSDCU with as many separately wired a.c. bias generator wires as can be fitted through the harnesses C/I3 and half of C/I1. Bias generator wiring may be paralleled on entry to the HSDCU, and the present baseline of just one powered bias generator scalar / O/P for each bolometer array results in just this.

Looking at the table above*, note that the A and B wires for each of these functions must be linked in the HSDCU to maintain cryoharness robustness against single wire breakage, *whether or not* they then split into two again and feed into Prime and Redundant DCU electronics functions. The A and B wires do not follow each other in the same harness tail and get linked inside the harness itself at the HSDCU because any mechanical distress to the cryoharness is likely to be on a tail-by-tail (connector-by-connector) basis and one does not want both the A and B wires of any function broken. They are bundled close together as shown in the Spire Instrument Block Diagram to minimise loop areas.

*Strictly speaking this paragraph applies to the grouped functions that get through the 37way linking, but it remains true for any particular BDA looking into the wiring.

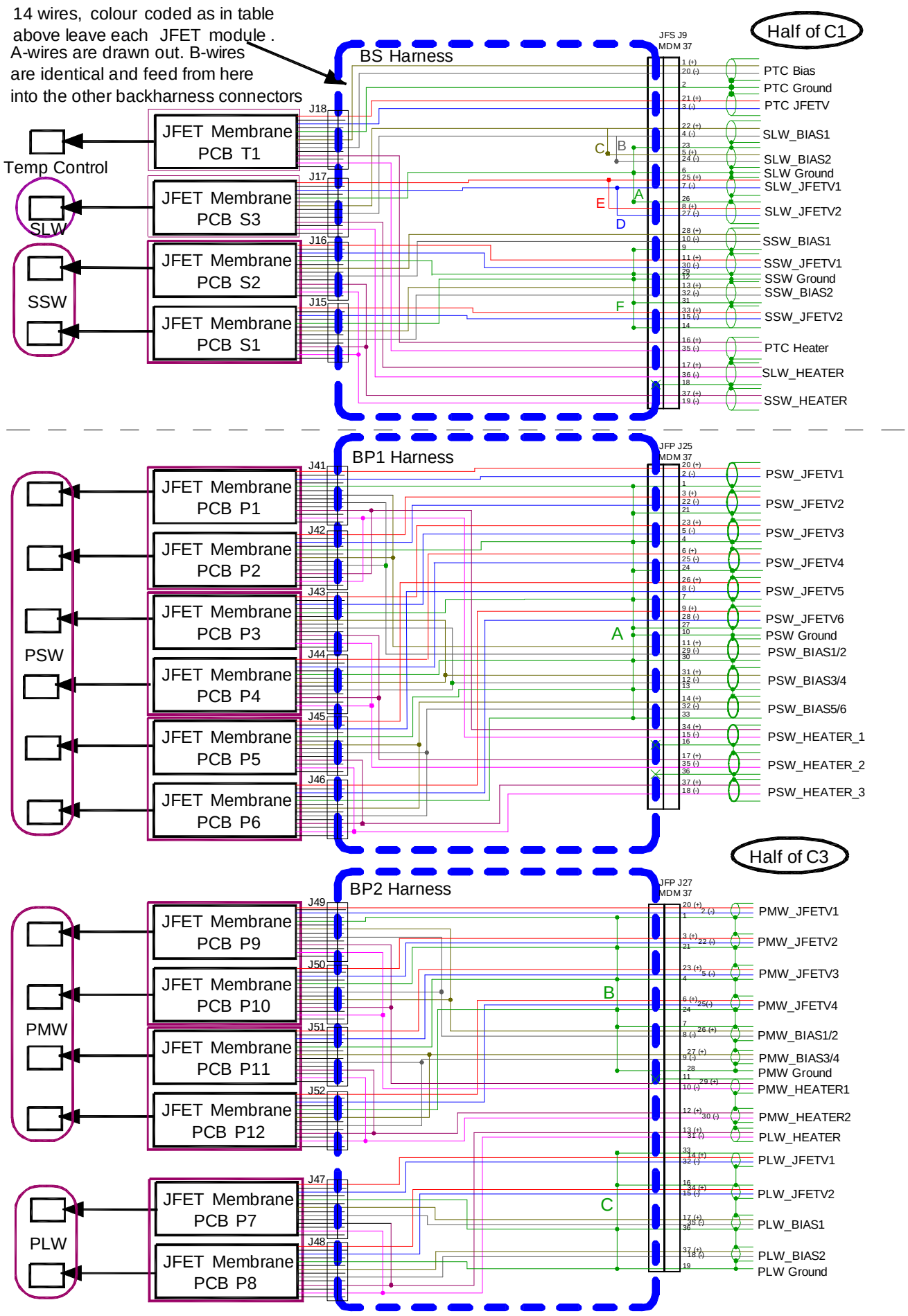
14 wires, colour coded as in table above leave each JFET module .
A-wires are drawn out. B-wires are identical and feed from here into the other backharness connectors
Half of C1
BS Harness
JFS J9
MDM 37
Temp Control
SLW
SSW
JFET Membrane PCB T1
JFET Membrane PCB S3
JFET Membrane PCB S2
JFET Membrane PCB S1
J18
J17
J16
J15
PTC Bias
PTC Ground
PTC JFETV
SLW_BIAS1
SLW_BIAS2
SLW Ground
SLW_JFETV1
SLW_JFETV2
SSW_BIAS1
SSW_JFETV1
SSW Ground
SSW_BIAS2
SSW_JFETV2
PTC Heater
SLW_HEATER
SSW_HEATER
BP1 Harness
JFP J25
MDM 37
PSW
JFET Membrane PCB P1
JFET Membrane PCB P2
JFET Membrane PCB P3
JFET Membrane PCB P4
JFET Membrane PCB P5
JFET Membrane PCB P6
J41
J42
J43
J44
J45
J46
PSW_JFETV1
PSW_JFETV2
PSW_JFETV3
PSW_JFETV4
PSW_JFETV5
PSW_JFETV6
PSW Ground
PSW_BIAS1/2
PSW_BIAS3/4
PSW_BIAS5/6
PSW_HEATER_1
PSW_HEATER_2
PSW_HEATER_3
Half of C3
BP2 Harness
JFP J27
MDM 37
PMW
PLW
JFET Membrane PCB P9
JFET Membrane PCB P10
JFET Membrane PCB P11
JFET Membrane PCB P12
JFET Membrane PCB P7
JFET Membrane PCB P8
J49
J50
J51
J52
J47
J48
PMW_JFETV1
PMW_JFETV2
PMW_JFETV3
PMW_JFETV4
PMW_BIAS1/2
PMW_BIAS3/4
PMW Ground
PMW_HEATER1
PMW_HEATER2
PLW_HEATER
PLW_JFETV1
PLW_JFETV2
PLW_BIAS1
PLW_BIAS2
PLW Ground

4.6.2 BP-Photometer

Overall Mechanical Drawing

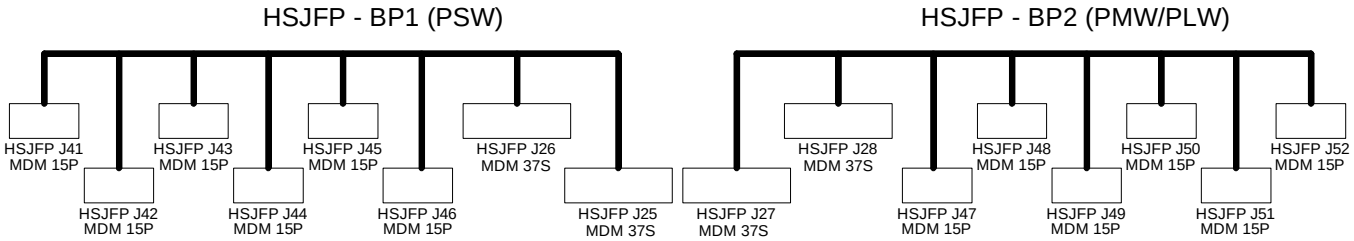

Connector/Backshell Details

JPL to specify.

Harness Layup

The BS harness is all at one temperature. Crimped 28AWG copper MDM?

Pairs of wires should at least be twisted, and some inter-function screens may be appropriate, JPL to specify.

This is definitely a harness to build on a dimensionally accurate horse!

Contact Details

Assigning grounds end to end in this harness is somewhat arbitrary because

i. Within the PSW Backplane Harness pins 1, 21, 4, 24, 7, 27, 10, 30, 13, 33 on the 37 Way connectors J25 are commoned as a PSW ground. These contacts are denoted by A in the table below.
ii. Within the PMW/PLW Backplane Harness pins 1, 22, 4, 24, 7, 28 on the 37 Way connectors J26 are commoned as a PMW ground. These contacts are denoted by B in the table below.
iii. Within the PMW/PLW Backplane Harness pins 33, 16, 36, 19 on the 37 Way connectors J26 are commoned as a PLW ground. These contacts are denoted by C in the table below.
iv. This wires within these harnesses are doubled up to improve the system robustness. The same pattern of commoning the pins in the J27/J28 harnesses for the PSW, PMW and PLW grounds is adopted and are denoted by A`, B` and C`

4.6.2.1 HSJFP – BP1 (PSW)

Contact Details (TBC by JPL)

	HSJFP		PSW Backplane Harness HSJFP BP1					
Name	**JFP J25 MDM 37**	**JFP J26 MDM 37**	**JFP J41 MDM 15 PSW**	**JFP J42 MDM 15 PSW**	**JFP J43 MDM 15 PSW**	**JFP J44 MDM 15 PSW**	**JFP J45 MDM 15 PSW**	**JFP J46 MDM 15 PSW**
PSW_JFETV1_A +	20		10					
PSW_JFETV1_A -	2		1					
PSW_JFETV1_A shld	1		9 (A)					
PSW_JFETV2_A +	3			10				
PSW_JFETV2_A -	22			1				
PSW_JFETV2_A shld	21		A					
PSW_JFETV3_A +	23				10			
PSW_JFETV3_A -	5				1			
PSW_JFETV3_A shld	4			9(A)				
PSW_JFETV4_A +	6					10		
PSW_JFETV4_A -	25					1		
PSW_JFETV4_A shld	24		A					
PSW_JFETV5_A +	26						10	
PSW_JFETV5_A -	8						1	
PSW_JFETV5_A shld	7				9(A)			
PSW_JFETV6_A +	9							10
PSW_JFETV6_A -	28							1
PSW_JFETV6_A shld	27		A					
PSW GRND_A	10		A					
PSW_BIAS1/2_A +	11		2	2				
PSW_BIAS1/2_A -	29		4	4				
PSW_BIAS1/2_A shld	30					9(A)		
PSW_BIAS3/4_A +	31				2	2		
PSW_BIAS3/4_A -	12				4	4		
PSW_BIAS3/4_A shld	13						9(A)	
PSW_BIAS5/6_A +	14						2	2
PSW_BIAS5/6_A -	32						4	4
PSW_BIAS5/6_A shld	33							9(A)
PSW_HEATER_A1 +	34		3	3				
PSW_HEATER_A1 -	15		11	11				
PSW_HEATER_A1 shld	16		No Connection (joined to PSW Heater Shields in C3)					
PSW_HEATER_A2 +	17				3	3		
PSW_HEATER_A2 -	35				11	11		
PSW_HEATER_A2 shld	36		No Connection (joined to PSW Heater Shields in C3)					
PSW_HEATER_A3 +	37						3	3
PSW_HEATER_A3 -	18						11	11
PSW_HEATER_A3 shld	36		No Connection (joined to PSW Heater Shields in C3)					
PSW_JFETV1_B +		20	14					
PSW_JFETV1_B -		2	8					
PSW_JFETV1_B shld		1	15(A`)					
PSW_JFETV2_B +		3		14				
PSW_JFETV2_B -		22		8				
PSW_JFETV2_B shld		21	A`					
PSW_JFETV3_B +		23			14			
PSW_JFETV3_B -		5			8			
PSW_JFETV3_B shld		4		15(A`)				

	HSJFP		PSW Backplane Harness HSJFP BP1					
Name	**JFP J25 MDM 37**	**JFP J26 MDM 37**	**JFP J41 MDM 15 PSW**	**JFP J42 MDM 15 PSW**	**JFP J43 MDM 15 PSW**	**JFP J44 MDM 15 PSW**	**JFP J45 MDM 15 PSW**	**JFP J46 MDM 15 PSW**
PSW_JFETV4_B +		6				14		
PSW_JFETV4_B -		25				8		
PSW_JFETV4_B shld		24	A`					
PSW_JFETV5_B +		26					14	
PSW_JFETV5_B -		8					8	
PSW_JFETV5_B shld		7			15(A`)			
PSW_JFETV6_B +		9						14
PSW_JFETV6_B -		28						8
PSW_JFETV6_B shld		27	A`					
PSW GRND_B		10	A`					
PSW_BIAS1/2_B +		11	7	7				
PSW_BIAS1/2_B -		29	5	5				
PSW_BIAS1/2_B shld		30				15(A`)		
PSW_BIAS3/4_B +		31			7	7		
PSW_BIAS3/4_B -		12			5	5		
PSW_BIAS3/4_B shld		13					15(A`)	
PSW_BIAS5/6_B +		14					7	7
PSW_BIAS5/6_B -		32					5	5
PSW_BIAS5/6_B shld		33						15(A`)
PSW_HEATER_B1 +		34	6	6				
PSW_HEATER_B1 -		15	13	13				
PSW_HEATER_B1 shld		16	No Connection (joined to PSW Heater Shields in C3)					
PSW_HEATER_B2 +		17			6	6		
PSW_HEATER_B2 -		35			13	13		
PSW_HEATER_B2 shld		36	No Connection (joined to PSW Heater Shields in C3)					
PSW_HEATER_B3 +		37					6	6
PSW_HEATER_B3 -		18					13	13
PSW_HEATER_B3 shld		36	No Connection (joined to PSW Heater Shields in C3)					

Note A: Commoned with HSJFP J25 pins 1, 21, 4, 24, 7, 27, 10, 30, 13, 33

Note A`: Commoned with HSJFP J26 pins 1, 21, 4, 24, 7, 27, 10, 30, 13, 33

4.6.2.2 HSJFP – BP2 (PMW/PLW)

Contact Details (TBC by JPL)

	HSJFP		PMW/PLW Backplane Harness HSJFP BP2					
Name	**JFP J27 MDM 37**	**JFP J28 MDM 37**	**JFP J47 15way** PLW	**JFP J48 15way** PLW	**JFP J49 15way** PMW	**JFP J50 15way** PMW	**JFP J51 15way** PMW	**JFP J52 15way** PMW
PMW_JFETV1_A +	20				10			
PMW_JFETV1_A -	2				1			
PMW_JFETV1_A shld	1				9(B)			
PMW_JFETV2_A +	3					10		
PMW_JFETV2_A -	22					1		
PMW_JFETV2_A shld	21					9(B)		
PMW_JFETV3_A +	23						10	
PMW_JFETV3_A -	5						1	
PMW_JFETV3_A shld	4						9(B)	
PMW_JFETV4_A +	6							10
PMW_JFETV4_A -	25							1
PMW_JFETV4_A shld	24							9(B)
PMW_BIAS1/2_A +	26				2	2		
PMW_BIAS1/2_A -	8				4	4		
PMW_BIAS1/2_A shld	7		B					
PMW_BIAS3/4_A +	27						2	2
PMW_BIAS3/4_A -	9						4	4
PMW_BIAS3/4_A shld	28		B					
PMW GND WIRE_A	28		B					
PMW HEATER A1 +	29				3	3		
PMW HEATER A1 -	10				11	11		
PMW HEATER A1 shld	11		No Connection (Joined to PMW and PLW heater shields in C Harness)					
PMW HEATER A2 +	12						3	3
PMW HEATER A2 -	30						11	11
PMW HEATER A2 shld	11		No Connection (Joined to PMW and PLW heater shields in C Harness)					
PLW HEATER A +	13		3	3				
PLW HEATER A -	31		11	11				
PLW HEATER A shld	11		No Connection (Joined to PMW and PLW heater shields in C Harness)					
PLW_JFETV1_A +	14		10					
PLW_JFETV1_A -	32		1					
PLW_JFETV1_A shld	33		C					
PLW_JFETV2_A +	34			10				
PLW_JFETV2_A -	15			1				
PLW_JFETV2_A shld	16		C					
PLW_BIAS1_A +	17		2					
PLW_BIAS1_A -	35		4					
PLW_BIAS1_A shld	36		9 (C)					
PLW_BIAS2_A +	37			2				
PLW_BIAS2_A -	18			4				
PLW_BIAS2_A shld	19		C					
PLW GROUND WIRE A	19		C (9)					
PMW_JFETV1_B +		20			14			
PMW_JFETV1_B -		2			8			
PMW_JFETV1_B shld		1			15(B`)			
PMW_JFETV2_B +		3				14		
PMW_JFETV2_B -		22				8		

	HSJFP		PMW/PLW Backplane Harness HSJFP BP2					
Name	**JFP J27 MDM 37**	**JFP J28 MDM 37**	**JFP J47 15way** PLW	**JFP J48 15way** PLW	**JFP J49 15way** PMW	**JFP J50 15way** PMW	**JFP J51 15way** PMW	**JFP J52 15way** PMW
PMW_JFETV2_B shld		21				15(B`)		
PMW_JFETV3_B +		23					14	
PMW_JFETV3_B -		5					8	
PMW_JFETV3_B shld		4					15(B`)	
PMW_JFETV4_B +		6						14
PMW_JFETV4_B -		25						8
PMW_JFETV4_B shld		24						15(B`)
PMW_BIAS1/2_B +		26			7	7		
PMW_BIAS1/2_B -		8			5	5		
PMW_BIAS1/2_B shld		7	B`					
PMW_BIAS3/4_B +		27					7	7
PMW_BIAS3/4_B -		9					5	5
PMW_BIAS3/4_B shld		28	B`					
PMW GND WIRE_B		28	B`					
PMW HEATER B1 +		29			6	6		
PMW HEATER B1 -		10			13	13		
PMW HEATER B1 shld		11	No Connection (Joined to PMW and PLW heater shields in C Harness)					
PMW HEATER B2 +		12					6	6
PMW HEATER B2 -		30					13	13
PMW HEATER B2 shld		11	No Connection (Joined to PMW and PLW heater shields in C Harness)					
PLW HEATER B +		13	6	6				
PLW HEATER B -		31	13	13				
PLW HEATER B shld		11	No Connection (Joined to PMW and PLW heater shields in C Harness)					
PLW_JFETV1_B +		14	14					
PLW_JFETV1_B -		32	8					
PLW_JFETV1_B shld		33	C`					
PLW_JFETV2_B +		34		14				
PLW_JFETV2_B -		15		8				
PLW_JFETV2_B shld		16	C`					
PLW_BIAS1_B +		17	7					
PLW_BIAS1_B -		35	5					
PLW_BIAS1_B shld		36	15 (C`)					
PLW_BIAS2_B +		37		7				
PLW_BIAS2_B -		18		5				
PLW_BIAS2_B shld		19	C`					
PLW GROUND WIRE B		19	C` (15)					

Note B: Commoned with HSJFP J 27 pins 1, 21, 4, 24, 7, 28

Note C: Commoned with HSJFP J 27 pins 33, 16 , 36, 19

Note B`: Commoned with HSJFP J 28 pins 1, 21, 4, 24, 7, 28

Note C`: Commoned with HSJFP J 28 pins 33, 16 , 36, 19

4.6.3 BS-Spectrometer

Overall Mechanical Drawing

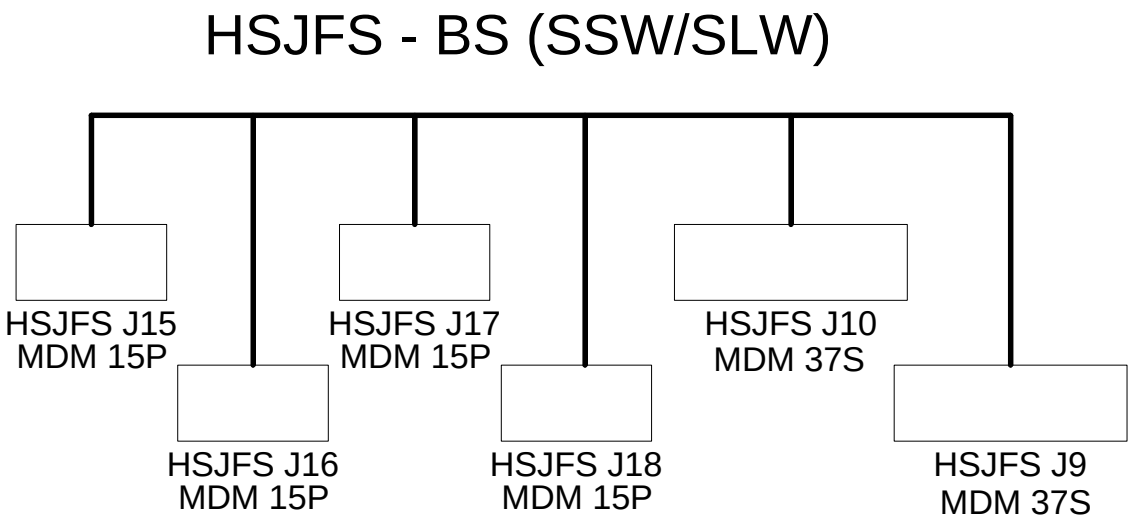

Connector/Backshell Details

JPL to specify.

Harness Layup

The BS harness is all at one temperature. Crimped 28AWG copper MDM

Pairs of wires should at least be twisted, and some inter-function screens may be appropriate, JPL to specify.

The whole harness must be very well RF screened to all its backshells.

Contact Details (TBC by JPL)

Function	HSJFS		HSJFS SSW/SLW Backplane Harness			
	HSJFS J9 MDM 37	HSJFS J10 MDM 37	HSJFS 15 MDM 15 SSW	HSJFS 16 MDM 15 SSW	HSJFS 17 MDM 15 SLW	HSJFS 18 MDM 15 PTC
PTC Bias_A +ve	1					2
PTC Bias_A –ve	20					4
PTC Bias_A Shield	NC		No Connection (Joined in C1 to PTC Ground A)			
PTC Ground A	2					9
PTC JFETV Bias_A +ve	21					10
PTC JFETV Bias_A -ve	3					1
PTC JFETV Bias_A Shield	NC		No Connection (Joined in C1 to PTC Ground A)			
SLW_BIAS_A1+ve	22				2 (C)	
SLW_BIAS_A1-ve	4				4 (B)	
SLW_BIAS_A1 shld	NC		N.C. (Joined in C1 to SLW Ground A)			
SLW_BIAS_A2 +ve	5		C (Joined to JFS J9 Pin 22)			
SLW_BIAS_A2 -ve	24		B (Joined to JFS J9 Pin 4)			
SLW_BIAS_A2 shld	23		A (Joined to JFS J9 Pins 6, 26)			
SLW Ground A	6				9 (A)	
SLW_JFETV_A1 +ve	25				10 (E)	
SLW_JFETV_A1 -ve	7				1 (D)	
SLW_JFETV_A1 shld	NC		N.C. (Joined in C1 to SLW Ground A)			
SLW_JFETV_A2 +ve	8		E (Joined to JFS J9 Pin 25)			
SLW_JFETV_A2 -ve	27		D (Joined to JFS J9 Pin 7)			
SLW_JFETV_A2 shld	6		A (Joined to JFS J9 Pins 6, 23)			
SSW_BIAS1_A +ve	28			2		
SSW_BIAS1_A –ve	10			4		
SSW_BIAS1_A shld	9		F (Joined to JFS J9 29,12, 31, 14)			
SSW_JFETV1_A +ve	11			10		
SSW_JFETV1_A -ve	30			1		
SSW_JFETV1_A shld	29			9 (F)		
SSW Ground A	12		9 (F)			
SSW_BIAS2_A +ve	13		2			
SSW_BIAS2_A –ve	32		4			
SSW_BIAS2_A shld	31		F (Joined to JFS J9 9, 29, 12, 14)			
SSW_JFETV2_A +ve	33		10			
SSW_JFETV2_A -ve	15		1			
SSW_JFETV2_A shld	14		F (Joined to JFS J9 9, 29, 12, 31)			
PTC JFET_HTR_A +ve	16					3
PTC JFET_HTR_A -ve	35					11
PTC JFET_HTR_A shld	NC		No Connection			
SLW_JFET_HEATER_A +ve	17				3	
SLW_JFET_HEATER_A -ve	36				11	
SLW_JFET_HEATER_A shld	18		No Connection			
SSW_JFET_HEATER_A +ve	37		3	3		
SSW_JFET_HEATER_A -ve	19		11	11		
SSW_JFET_HEATER_A shld	NC		No Connection			
PTC Bias_B +ve		1				7
PTC Bias_B –ve		20				5
PTC Bias_B Shield		2	No Connection (Joined in C1 to PTC Ground A)			
PTC JFETV Bias_B +ve		21				15
PTC JFETV Bias_B –ve		3				14
PTC JFETV Bias_B Shield		2				8
PTC Ground B			No Connection (Joined in C1 to PTC Ground A)			
SLW_BIAS_B1+ve		22			7 (C`)	
SLW_BIAS_B1-ve		4			5 (B`)	

Function	HSJFS		HSJFS SSW/SLW Backplane Harness			
	HSJFS J9 MDM 37	HSJFS J10 MDM 37	HSJFS 15 MDM 15	HSJFS 16 MDM 15	HSJFS 17 MDM 15	HSJFS 18 MDM 15
			SSW	SSW	SLW	PTC
SLW_BIAS_B1 shld		6	N.C. (Joined in C1 to SLW Ground A)			
SLW_BIAS_B2 +ve		5	C` (Joined to JFS J10 Pin 22)			
SLW_BIAS_B2 –ve		24	B` (Joined to JFS J10 Pin 4)			
SLW_BIAS_B2 shld		23	A` (Joined to JFS J10 Pins 6, 26)			
SLW Ground B		6			15 (A`)	
SLW_JFETV_B1 +ve		25			14 (E`)	
SLW_JFETV_B1 –ve		7			8 (D`)	
SLW_JFETV_B1 shld		6	N.C. (Joined in C1 to SLW Ground B)			
SLW_JFETV_B2 +ve		8	E` (Joined to JFS J10 Pin 25)			
SLW_JFETV_B2 –ve		27	D` (Joined to JFS J10 Pin 7)			
SLW_JFETV_B2 shld		6	A` (Joined to JFS J10 Pins 6, 23)			
SSW_BIAS1_B +ve		28		7		
SSW_BIAS1_B –ve		10		5		
SSW_BIAS1_B shld		9	F` (Joined to JFS J10 29,12, 31, 14)			
SSW_JFETV1_B +ve		11		14		
SSW_JFETV1_B -ve		30		8		
SSW_JFETV1_B shld		29		15 (F`)		
SSW Ground B		12	15 (F`)			
SSW_BIAS2_B +ve		13	7			
SSW_BIAS2_B –ve		32	5			
SSW_BIAS2_B shld		31	F` (Joined to JFS J10 9, 29, 12, 14)			
SSW_JFETV2_B +ve		33	14			
SSW_JFETV2_B -ve		15	8			
SSW_JFETV2_B shld		14	F` (Joined to JFS J10 9, 29, 12, 31)			
SLW_HEATER_B +ve		17				6
SLW_HEATER_B -ve		36				13
SLW_HEATER_B shld		18	No Connection			
SSW_HEATER_B +ve		37			6	
SSW_HEATER_B -ve		19			13	
SSW_HEATER_B shld		NC	No Connection			
PTC JFET_HTR_B +ve		16	6	6		
PTC JFET_HTR_B -ve		35	13	13		
PTC JFET_HTR_B shld		NC	No Connection			

4.7 Test Harnesses

4.7.1 T1 1553 Bus A

Overall Mechanical Drawing

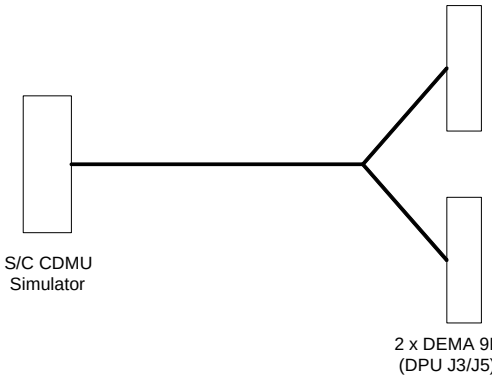

Connector/Backshell Details

DEMA 9 P + Glenair 550 - T - 039 - M - 1 - TBD - H - 0 - TBD to DPU J3
DEMA 9 P + Glenair 550 - T - 039 - M - 1 - TBD - H - 0 - TBD to DPU J5

Harness Layup

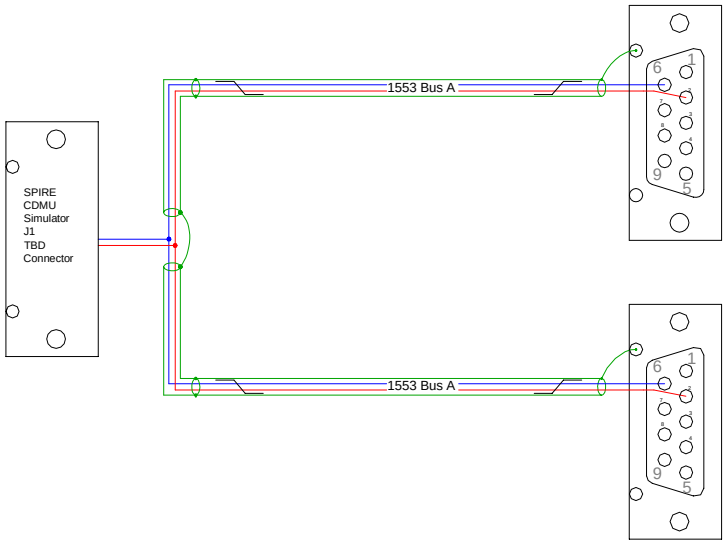

Contact Details

4.7.2 T2 1553 Bus B

Overall Mechanical Drawing

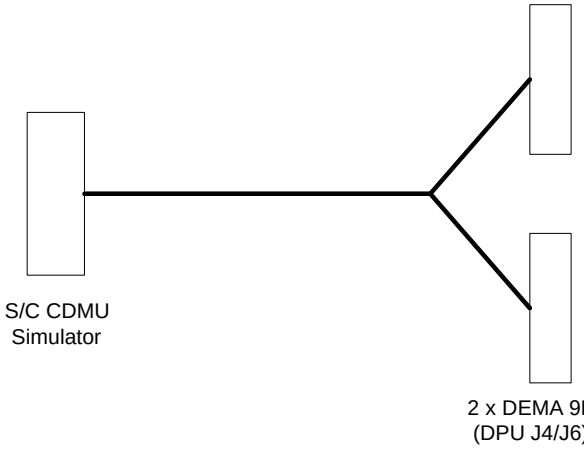

Connector/Backshell Details

DEMA 9 P + Glenair 550 - T - 039 - M - 1 - TBD - H - 0 - TBD to DPU J4
DEMA 9 P + Glenair 550 - T - 039 - M - 1 - TBD - H - 0 - TBD to DPU J6

Contact Details

Harness Layup

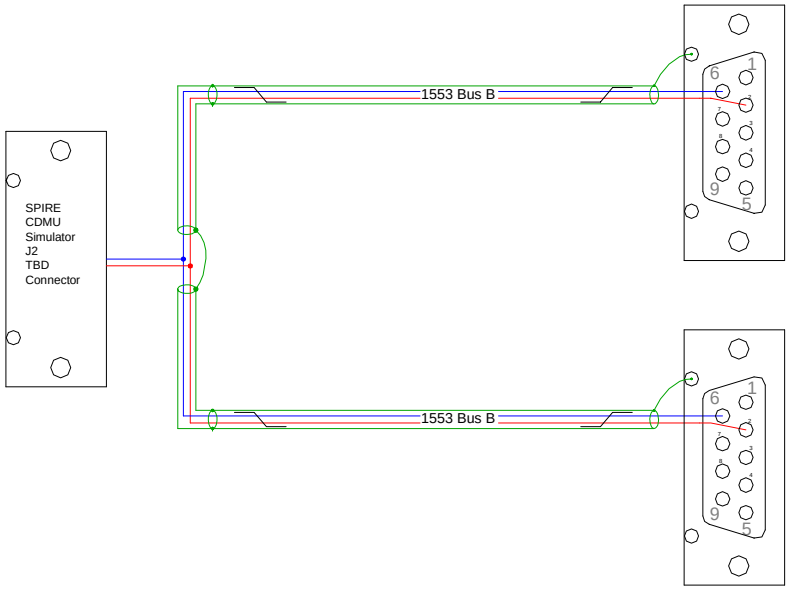

4.7.3 T3 DPU-P Power

Overall Mechanical Drawing

Connector/Backshell Details

To HSDPU J1

Harness Layup

Contact Details
As per SPIRE-RAL-COM-000562 Iss2

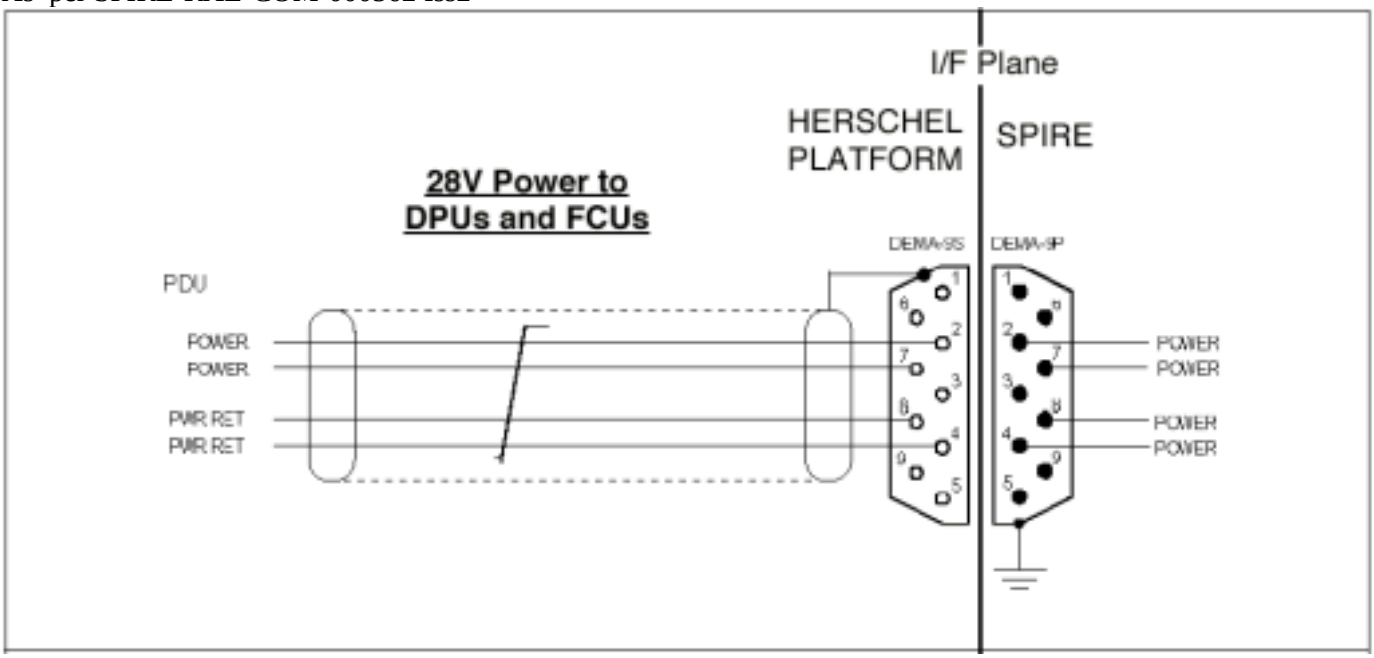

4.7.4 T4 DPU-R Power

Overall Mechanical Drawing

Connector/Backshell Details

To HSDPU J2

Harness Layup

Contact Details
As per SPIRE-RAL-COM-000562 Iss2

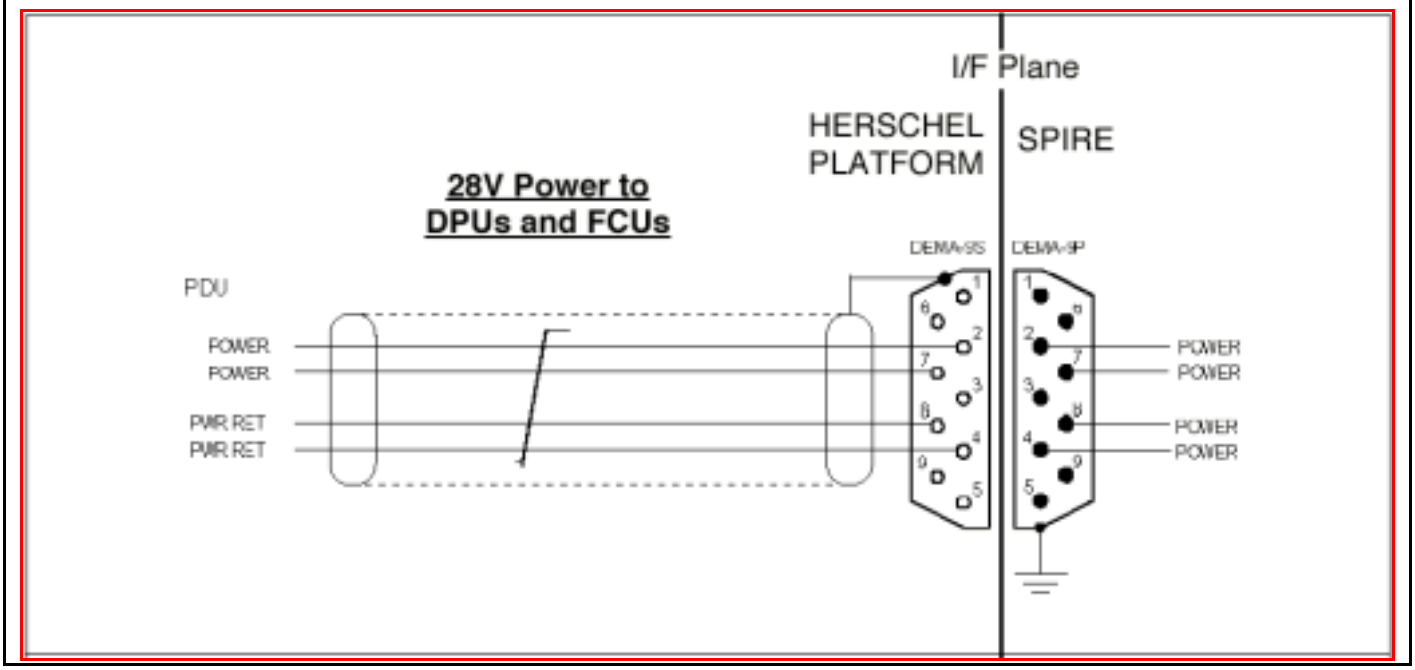

4.7.5 T5 FCU-P Power

Overall Mechanical Drawing

1:1

Connector/Backshell Details

To HSFCU J5

Harness Layup

Contact Details
As per SPIRE-RAL-COM-000562 Iss2

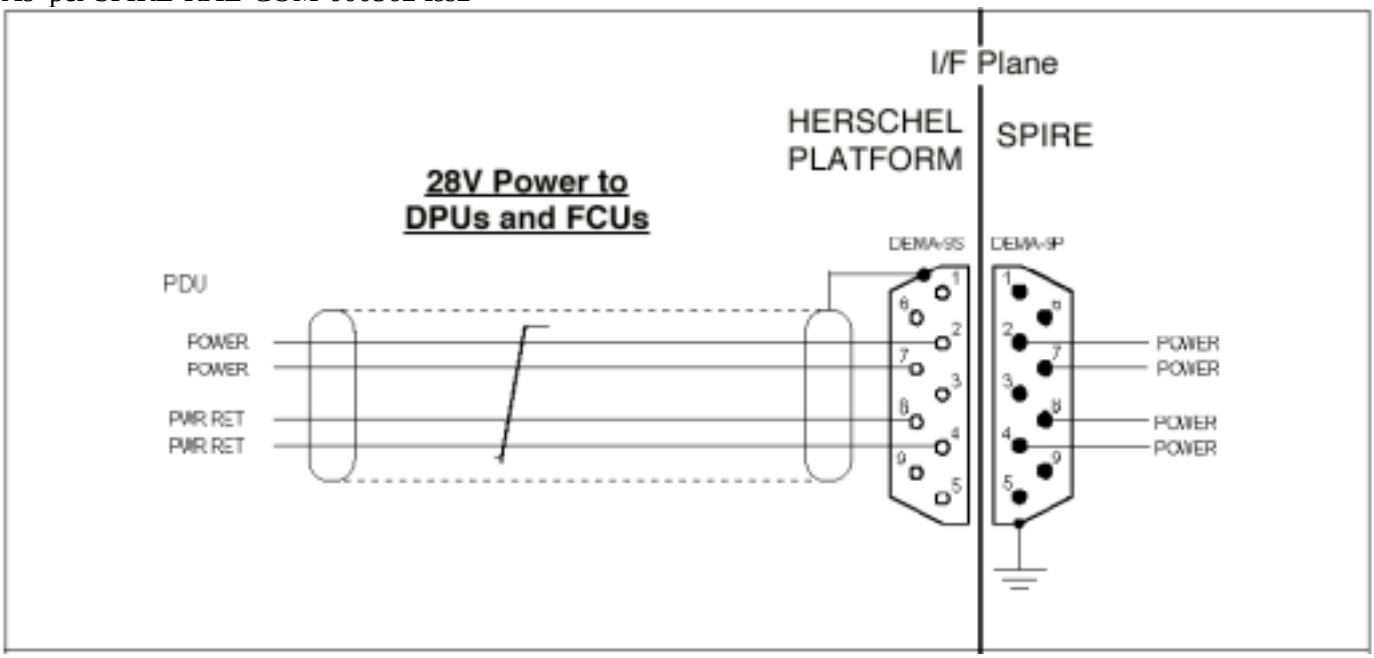

4.7.6 T6 FCU-R Power

Overall Mechanical Drawing

1:1

Connector/Backshell Details

To HSFCU J6

Harness Layup

Contact Details
As per SPIRE-RAL-COM-000562 Iss2

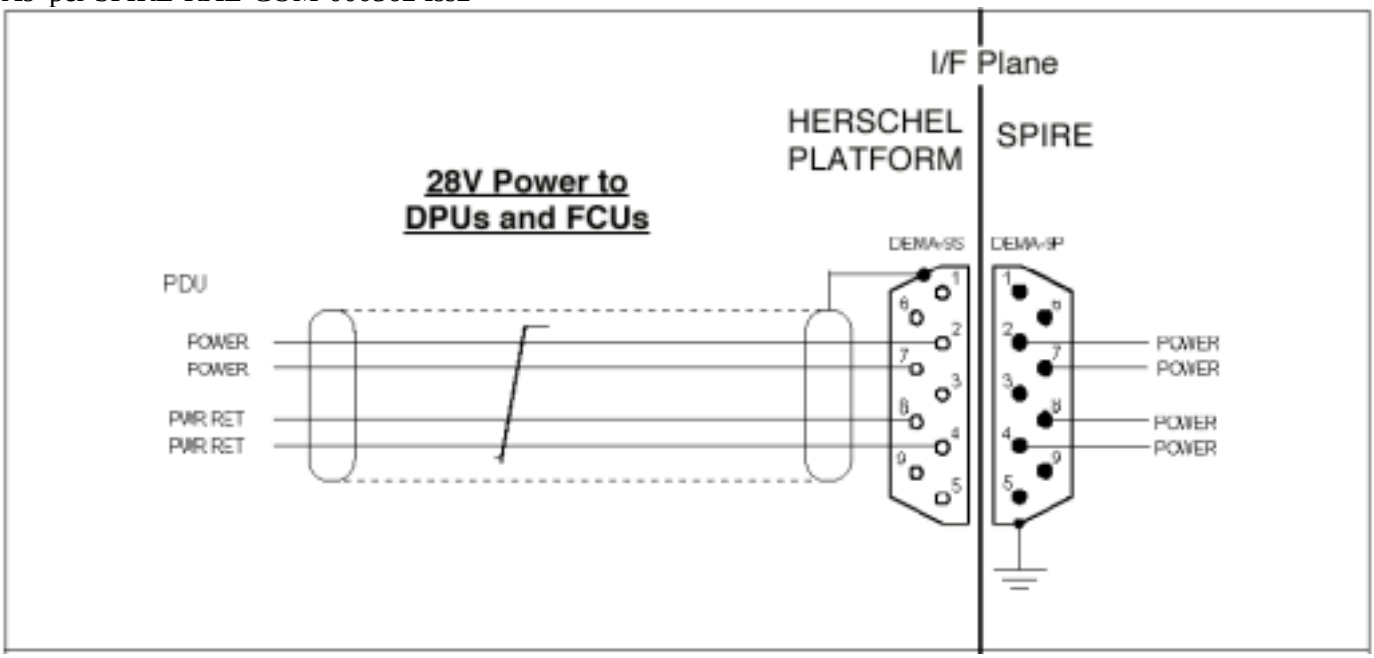

4.7.7 T7 Mechanisms Launch Lock Confirm (Prime)

4.7.8 T8 Mechanisms Launch Lock Confirm (Redundant)

4.8 STM Thermometry Harnesses

4.8.1 External STM

Mechanical Drawing

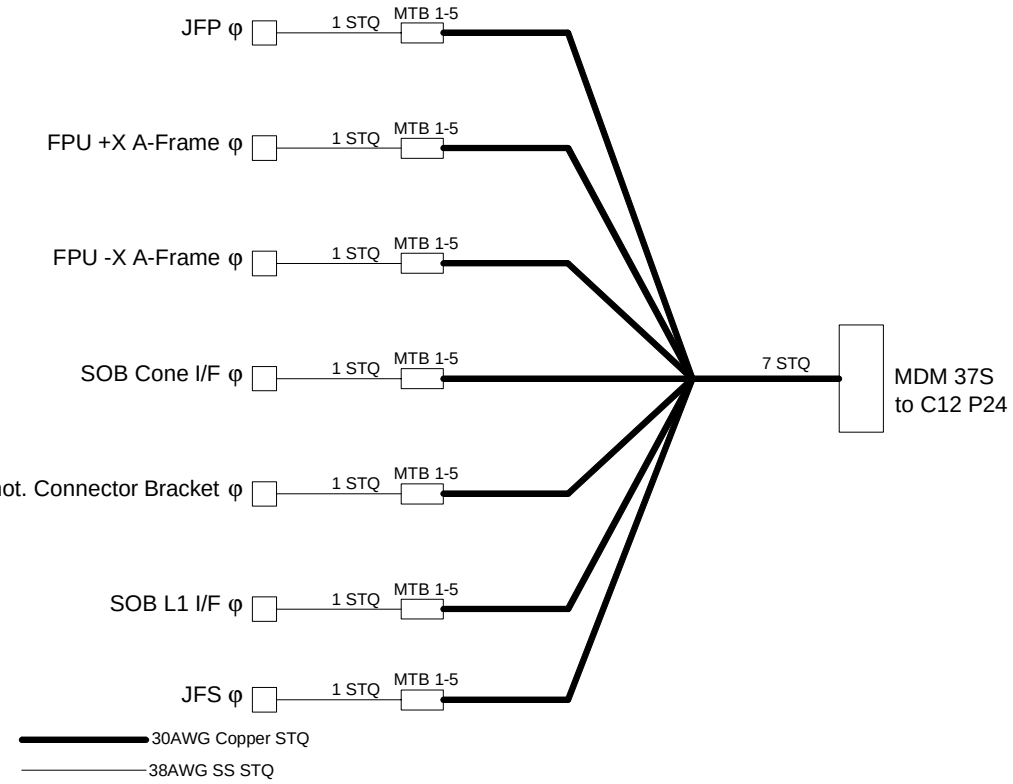

Connector Backshell Details

Glenair 500-T-010 M 37 to Four Wire Cernox Thermistors (Five Cannon ITT MTB 1-5)

Harness Layup

Seven 30AWG Copper STQ
Seven 38AWG Stainless Steel STQ

Connector Details

TBD

4.8.2 Internal STM

Mechanical Drawing

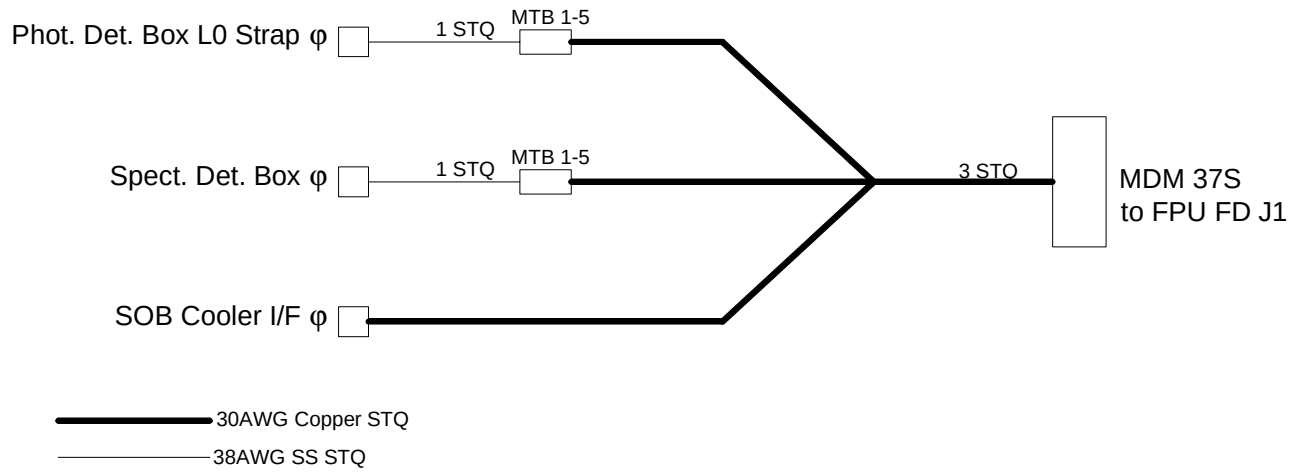

Connector Backshell Details

Glenair 500-T-010 M 37 to Four Wire Cernox Thermistors (Two Cannon ITT MTB 1-5)

Harness Layup

Three 30AWG Copper STQ
Two 38AWG Stainless Steel STQ

Connector Details

TBD

ANNEX 1 – Internal Cryostat Wiring List

Notes:

- The column headed "Implementation" is intended to indicate the screening configuration around functions necessary for the SPIRE instrument. The terms used are as if each function were implemented as a single conductor (STP="Screened Twisted Pair") but this is not a requirement on the number of conductors used for the actual physical construction. Thus, individual functions can in principle be multiple wires if the harness fabricator so requires.
- 12-ax is a particular implementation as shown in Annex 4
- The resistance value for each individual function is to be considered as the starting point for the design and can be optimised by negotiation on a case-by-case basis.
- The resistance values are assumed to be the values applicable to normal operation in flight.

Name	128 Way Connector	FPU/JFS/JFP Connector Label	Unit Connector Type	Harness Connector Label	Harness Connector Type	Description	Number of Conductors excl. shields	Number of inner Shields	Implementation	Max. Impedance Requirements R (Ω)	C(pF)	L(uH)	Max.Current per Conductor	Average Current (see note 9)	Operating Mode P	Sp	CR	Max. Volts
C1 Type 3	CVV 1	HSJFS J5	MDM 25 P	HSJFS P5	MDM 25 S	Bolometer signals from JFS (SLW 1-12)	24	3	12-ax	500	1000pF	0.08uH	1.0E-09	5.0E-10	0	1	0	0.1
						Anti-cross talk ground wires.	12	NA		500	1000pF	0.08uH	0.0E+00	0.0E+00	0	0	0	0.1
		HSJFS J6	MDM 25 P	HSJFS P6	MDM 25S	Bolometer signals from JFS (SLW 13-24)	24	3	12-ax	500	1000pF	0.08uH	1.0E-09	5.0E-10	0	1	0	0.1
						Anti-cross talk ground wires.	12	NA		500	1000pF	0.08uH	0.0E+00	0.0E+00	0	0	0	0.1
		HSJFS J9	MDM 37 S	HSJFS P9	MDM 37P	PTC Bias	2	1	STP	200	1000pF	0.08	3.2E-08	8.0E-09	1	0	0	10
						PTC Ground wire	1	0	S	50	1000pF	0.08uH	0	0	0	0	0	10
						PTC JFET Bias	2	1	STP	100	1000pF	0.08uH	5.0E-03	2.0E-04	1	0	0	10
						SLW Bolometer Bias	4	2	STP	200	1000pF	0.08uH	9.6E-08	2.4E-08	0	1	0	10
						SLW JFET Bias	4	2	STP	100	1000pF	0.08uH	2.5E-03	6.0E-04	0	1	0	10
						SLW Ground wire	1	0	S	50	1000pF	0.08uH	0	0	0	0	0	10
						SSW Bolometer Bias	4	2	STP	200	1000pF	0.08uH	1.2E-03	4.8E-08	0	1	0	10
						SSW JFET Bias	4	2	STP	100	1000pF	0.08uH	5.0E-03	1.2E-03	0	1	0	10
						SSW Ground Wire	1	0	S	50	1000pF	0.08uH	0	0	0	0	0	10
						PTC JFET Heater	2	1	STP	200	1000pF	0.08uH	1.9E-03	4.8E-04	0	0	0	10
						SLW JFET Heater	2	1	STP	200	1000pF	0.08uH	3.3E-03	8.3E-04	0	0	0	10
						SSW JFET Heater	2	1	STP	200	1000pF	0.08uH	6.7E-03	1.7E-03	0	0	0	10
		HSJFS J10	MDM 37 S	HSJFS P10	MDM 37P	PTC Bias	2	1	STP	200	1000pF	0.08	3.2E-08	8.0E-09	0	0	0	10
						PTC Ground wire	1	0	S	50	1000pF	0.08uH	0	0	0	0	0	10
						PTC JFET Bias	2	1	STP	100	1000pF	0.08uH	5.0E-03	2.0E-04	0	0	0	10
						SLW Bolometer Bias	4	2	STP	200	1000pF	0.08uH	9.6E-08	2.4E-08	0	0	0	10
						SLW JFET Bias	4	2	STP	100	1000pF	0.08uH	2.5E-03	6.0E-04	0	0	0	10
						SLW Ground wire	1	0	S	50	1000pF	0.08uH	0	0	0	0	0	10
						SSW Bolometer Bias	4	2	STP	200	1000pF	0.08uH	1.2E-03	4.8E-08	0	0	0	10
						SSW JFET Bias	4	2	STP	100	1000pF	0.08uH	5.0E-03	1.2E-03	0	0	0	10
						SSW Ground Wire	1	0	S	50	1000pF	0.08uH	0	0	0	0	0	10
						PTC JFET Heater	2	1	STP	200	1000pF	0.08uH	1.9E-03	4.8E-04	0	0	0	10
						SLW JFET Heater	2	1	STP	200	1000pF	0.08uH	3.3E-03	8.3E-04	0	0	0	10
						SSW JFET Heater	2	1	STP	200	1000pF	0.08uH	6.7E-03	1.7E-03	0	0	0	10
						FPU Faraday Shield Link #			#	50		0.01uH						no
C2 Type4	CVV 2	HSJFS J7	MDM 25 P	HSJFS P7	MDM 25S	Bolometer signals from JFS (PTC 1-3)	8	1	12-ax	500	1000pF	0.08uH	1.0E-09	5.0E-10	1	0	0	0.1
						Anti-cross talk ground wires.	4	NA		500	1000pF	0.08uH	0.0E+00	0.0E+00	0	0	0	0.1
		HSJFS J1	MDM 25 P	HSJFS P1	MDM 25S	Bolometer signals from JFS (SSW 1-12)	24	3	12-ax	500	1000pF	0.08uH	1.0E-09	5.0E-10	0	1	0	0.1
						Anti-cross talk ground wires.	12	NA		500	1000pF	0.08uH	0.0E+00	0.0E+00	0	0	0	0.1
		HSJFS J2	MDM 25 P	HSJFS P2	MDM 25S	Bolometer signals from JFS (SSW 13-24)	24	3	12-ax	500	1000pF	0.08uH	1.0E-09	5.0E-10	0	1	0	0.1
						Anti-cross talk ground wires.	12	NA		500	1000pF	0.08uH	0.0E+00	0.0E+00	0	0	0	0.1
		HSJFS J3	MDM 25 P	HSJFS P3	MDM 25S	Bolometer signals from JFS (SSW 25-36)	24	3	12-ax	500	1000pF	0.08uH	1.0E-09	5.0E-10	0	1	0	0.1
						Anti-cross talk ground wires.	12	NA		500	1000pF	0.08uH	0.0E+00	0.0E+00	0	0	0	0.1
		HSJFS J4	MDM 25 P	HSJFS P4	MDM 25S	Bolometer signals from JFS (SSW 37-42)	16	2	12-ax	500	1000pF	0.08uH	1.0E-09	5.0E-10	0	1	0	0.1
						Anti-cross talk ground wires.	8	NA		500	1000pF	0.08uH	0.0E+00	0.0E+00	0	0	0	0.1
						FPU Faraday Shield Link #			#	50		0.01uH						no

Name	128 Way Connector	FPU/JFS/JFP Connector Label	Unit Connector Type	Harness Connector Label	Harness Connector Type	Description	Number of Conductors excl. shields	Number of inner Shields	Implementation	Max. Impedance Requirements R (Ω)	C(pF)	L(uH)	Max.Current per Conductor	Average Current (see note 9)	Operating Mode P	Sp	CR	Max. Volts
C3		HSJFP J25	MDM 37 S	JFP P25	MDM 37P	PSW JFET Bias	12	6	STP	100	1000pF	0.08uH	5.0E-03	1.2E-03	1	0	0	10
						PSW Ground	1	0	S	50	1000pF	0.08uH	0	0	0	0	0	10
						PSW Bolometer Bias	6	3	STP	200	1000pF	0.08uH	3.8E-07	9.6E-08	1	0	0	10
						PSW Heater	6	3	STP	200	1000pF	0.08uH	3.8E-03	9.6E-04	0	0	0	10
		HSJFP J27	MDM 37 S	JFP P27	MDM 37P	PMW JFET Bias	8	4	STP	100	1000pF	0.08uH	5.0E-03	1.2E-03	1	0	0	10
						PMW Bolometer Bias	4	2	STP	200	1000pF	0.08uH	3.8E-07	9.6E-08	1	0	0	10
						PMW Ground	1	0	S	50	1000pF	0.08uH	0	0	0	0	0	10
						PMW JFET Heater	4	2	STP	200	1000pF	0.08uH	3.8E-03	9.6E-04	0	0	0	10
						PLW JFET Heater	2	1	STP	200	1000pF	0.08uH	3.8E-03	9.6E-04	0	0	0	10
						PLW JFET Bias	4	2	STP	100	1000pF	0.08uH	5.0E-03	1.2E-03	1	0	0	10
						PLW Bolometer Bias	4	2	STP	200	1000pF	0.08uH	1.9E-07	4.8E-08	1	0	0	10
						PLW Ground	1	0	S	50	1000pF	0.08uH	0	0	0	0	0	10
		HSJFP J26	MDM 37 S	JFP P26	MDM 37P	PSW JFET Bias	12	6	STP	100	1000pF	0.08uH	5.0E-03	1.2E-03	0	0	0	10
						PSW Ground	1	0	S	50	1000pF	0.08uH	0	0.0E+00	0	0	0	10
						PSW Bolometer Bias	6	3	STP	200	1000pF	0.08uH	3.8E-07	9.6E-08	0	0	0	10
						PSW Heater	6	3	STP	200	1000pF	0.08uH	3.8E-03	9.6E-04	0	0	0	10
		HSJFP J28	MDM 37 S	JFP P28	MDM 37P	PMW JFET Bias	8	4	STP	100	1000pF	0.08uH	5.0E-03	1.2E-03	0	0	0	10
						PMW Bolometer Bias	4	2	STP	200	1000pF	0.08uH	3.8E-07	9.6E-08	0	0	0	10
						PMW Ground	1	0	S	50	1000pF	0.08uH	0.0E+00	0.0E+00	0	0	0	10
						PMW JFET Heater	4	2	STP	200	1000pF	0.08uH	3.8E-03	9.6E-04	0	0	0	10
						PLW JFET Heater	2	1	STP	200	1000pF	0.08uH	3.8E-03	9.6E-04	0	0	0	10
						PLW JFET Bias	4	2	STP	100	1000pF	0.08uH	5.0E-03	1.2E-03	0	0	0	10
						PLW Bolometer Bias	4	2	STP	200	1000pF	0.08uH	1.9E-07	4.8E-08	0	0	0	10
						PLW Ground	1	0	S	50	1000pF	0.08uH	0.0E+00	0.0E+00	0	0	0	10
						FPU Faraday Shield Link #			#	50		0.01uH						no
C4	CVV 4	HSJFP J21	MDM 25 P	HSJFP P21	MDM 25S	Bolometer signals from JFP (PMW 1-12)	24	3	12-ax	500	1000pF	0.08uH	1.0E-09	5.0E-10	1	0	0	0.1
						Anti-cross talk ground wires.	12	NA		500	1000pF	0.08uH	0.0E+00	0.0E+00	0	0	0	0.1
Type1		HSJFP J22	MDM 25 P	HSJFP P22	MDM 25S	Bolometer signals from JFP (PMW 13-24)	24	3	12-ax	500	1000pF	0.08uH	1.0E-09	5.0E-10	1	0	0	0.1
						Anti-cross talk ground wires.	12	NA		500	1000pF	0.08uH	0.0E+00	0.0E+00	0	0	0	0.1
		HSJFP J23	MDM 25 P	HSJFP P23	MDM 25S	Bolometer signals from JFP (PMW 25-36)	24	3	12-ax	500	1000pF	0.08uH	1.0E-09	5.0E-10	1	0	0	0.1
						Anti-cross talk ground wires.	12	NA		500	1000pF	0.08uH	0.0E+00	0.0E+00	0	0	0	0.1
		HSJFP J24	MDM 25 P	HSJFP P24	MDM 25S	Bolometer signals from JFP (PMW 37-48)	24	3	12-ax	500	1000pF	0.08uH	1.0E-09	5.0E-10	1	0	0	0.1
						Anti-cross talk ground wires.	12	NA		500	1000pF	0.08uH	0.0E+00	0.0E+00	0	0	0	0.1
						FPU Faraday Shield Link #			#	50		0.01uH						no
C5	CVV 5	HSJFP J17	MDM 25 P	HSJFP P17	MDM 25S	Bolometer signals from JFP (PMW 49-60)	24	3	12-ax	500	1000pF	0.08uH	1.0E-09	5.0E-10	1	0	0	0.1
						Anti-cross talk ground wires.	12	NA		500	1000pF	0.08uH	0.0E+00	0.0E+00	0	0	0	0.1
Type1		HSJFP J18	MDM 25 P	HSJFP P18	MDM 25S	Bolometer signals from JFP (PMW 61-72)	24	3	12-ax	500	1000pF	0.08uH	1.0E-09	5.0E-10	1	0	0	0.1
						Anti-cross talk ground wires.	12	NA		500	1000pF	0.08uH	0.0E+00	0.0E+00	0	0	0	0.1
		HSJFP J19	MDM 25 P	HSJFP J19	MDM 25S	Bolometer signals from JFP (PMW 73-84)	24	3	12-ax	500	1000pF	0.08uH	1.0E-09	5.0E-10	1	0	0	0.1
						Anti-cross talk ground wires.	12	NA		500	1000pF	0.08uH	0.0E+00	0.0E+00	0	0	0	0.1
		HSJFP J20	MDM 25 P	HSJFP J20	MDM 25S	Bolometer signals from JFP (PMW 85-96)	24	3	12-ax	500	1000pF	0.08uH	1.0E-09	5.0E-10	1	0	0	0.1
						Anti-cross talk ground wires.	12	NA		500	1000pF	0.08uH	0.0E+00	0.0E+00	0	0	0	0.1
						FPU Faraday Shield Link #			#	50		0.01uH						no

Name	128 Way Connector	FPU/JFS/JFP Connector Label	Unit Connector Type	Harness Connector Label	Harness Connector Type	Description	Number of Conductors excl. shields	Number of inner Shields	Implementation	Max. Impedance Requirements R (Ω)	C(pF)	L(uH)	Max.Current per Conductor	Average Current (see note 9)	Operating Mode P	Sp	CR	Max. Volts
C6	CVV 6	HSJFP J13	MDM 25 P	HSJFP P13	MDM 25S	Bolometer signals from JFP (PLW 1-12)	24	3	12-ax	500	1000pF	0.08uH	1.0E-09	5.0E-10	1	0	0	0.1
						Anti-cross talk ground wires.	12	NA		500	1000pF	0.08uH	0.0E+00	0.0E+00	0	0	0	0.1
Type1		HSJFP J14	MDM 25 P	HSJFP P14	MDM 25S	Bolometer signals from JFP (PLW 13-24)	24	3	12-ax	500	1000pF	0.08uH	1.0E-09	5.0E-10	1	0	0	0.1
						Anti-cross talk ground wires.	12	NA		500	1000pF	0.08uH	0.0E+00	0.0E+00	0	0	0	0.1
		HSJFP J15	MDM 25 P	HSJFP P15	MDM 25S	Bolometer signals from JFP (PLW 25-36)	24	3	12-ax	500	1000pF	0.08uH	1.0E-09	5.0E-10	1	0	0	0.1
						Anti-cross talk ground wires.	12	NA		500	1000pF	0.08uH	0.0E+00	0.0E+00	0	0	0	0.1
		HSJFP J16	MDM 25 P	HSJFP P16	MDM 25S	Bolometer signals from JFP (PLW 37-48)	24	3	12-ax	500	1000pF	0.08uH	1.0E-09	5.0E-10	1	0	0	0.1
						Anti-cross talk ground wires.	12	NA		500	1000pF	0.08uH	0.0E+00	0.0E+00	0	0	0	0.1
						FPU Faraday Shield Link #			#	50		0.01uH						no
C7	CVV 7	HSJFP J9	MDM 25 P	HSJFP P9	MDM 25S	Bolometer signals from JFP (PSW 1-12)	24	3	12-ax	500	1000pF	0.08uH	1.0E-09	5.0E-10	1	0	0	0.1
						Anti-cross talk ground wires.	12	NA		500	1000pF	0.08uH	0.0E+00	0.0E+00	0	0	0	0.1
Type1		HSJFP J10	MDM 25 P	HSJFP P10	MDM 25S	Bolometer signals from JFP (PSW 13-24)	24	3	12-ax	500	1000pF	0.08uH	1.0E-09	5.0E-10	1	0	0	0.1
						Anti-cross talk ground wires.	12	NA		500	1000pF	0.08uH	0.0E+00	0.0E+00	0	0	0	0.1
		HSJFP J11	MDM 25 P	HSJFP P11	MDM 25S	Bolometer signals from JFP (PSW 25-36)	24	3	12-ax	500	1000pF	0.08uH	1.0E-09	5.0E-10	1	0	0	0.1
						Anti-cross talk ground wires.	12	NA		500	1000pF	0.08uH	0.0E+00	0.0E+00	0	0	0	0.1
		HSJFP J12	MDM 25 P	HSJFP P12	MDM 25S	Bolometer signals from JFP (PSW 37-48)	24	3	12-ax	500	1000pF	0.08uH	1.0E-09	5.0E-10	1	0	0	0.1
						Anti-cross talk ground wires.	12	NA		500	1000pF	0.08uH	0.0E+00	0.0E+00	0	0	0	0.1
						FPU Faraday Shield Link #			#	50		0.01uH						no
C8	CVV 8	HSJFP J5	MDM 25 P	HSJFP P5	MDM 25S	Bolometer signals from JFP (PSW 49-60)	24	3	12-ax	500	1000pF	0.08uH	1.0E-09	5.0E-10	1	0	0	0.1
						Anti-cross talk ground wires.	12	NA		500	1000pF	0.08uH	0.0E+00	0.0E+00	0	0	0	0.1
Type1		HSJFP J6	MDM 25 P	HSJFP P6	MDM 25S	Bolometer signals from JFP (PSW 61-72)	24	3	12-ax	500	1000pF	0.08uH	1.0E-09	5.0E-10	1	0	0	0.1
						Anti-cross talk ground wires.	12	NA		500	1000pF	0.08uH	0.0E+00	0.0E+00	0	0	0	0.1
		HSJFP J7	MDM 25 P	HSJFP P7	MDM 25S	Bolometer signals from JFP (PSW 73-84)	24	3	12-ax	500	1000pF	0.08uH	1.0E-09	5.0E-10	1	0	0	0.1
						Anti-cross talk ground wires.	12	NA		500	1000pF	0.08uH	0.0E+00	0.0E+00	0	0	0	0.1
		HSJFP J8	MDM 25 P	HSJFP P8	MDM 25S	Bolometer signals from JFP (PSW 85-96)	24	3	12-ax	500	1000pF	0.08uH	1.0E-09	5.0E-10	1	0	0	0.1
						Anti-cross talk ground wires.	12	NA		500	1000pF	0.08uH	0.0E+00	0.0E+00	0	0	0	0.1
						FPU Faraday Shield Link #			#	50		0.01uH						no
C9	CVV 9	HSJFP J1	MDM 25 P	HSJFP P1	MDM 25S	Bolometer signals from JFP (PSW 97-108)	24	3	12-ax	500	1000pF	0.08uH	1.0E-09	5.0E-10	1	0	0	0.1
						Anti-cross talk ground wires.	12	NA		500	1000pF	0.08uH	0.0E+00	0.0E+00	0	0	0	0.1
Type1		HSJFP J2	MDM 25 P	HSJFP P2	MDM 25S	Bolometer signals from JFP (PSW 109-120)	24	3	12-ax	500	1000pF	0.08uH	1.0E-09	5.0E-10	1	0	0	0.1
						Anti-cross talk ground wires.	12	NA		500	1000pF	0.08uH	0.0E+00	0.0E+00	0	0	0	0.1
		HSJFP J3	MDM 25 P	HSJFP P3	MDM 25S	Bolometer signals from JFP (PSW 121-132)	24	3	12-ax	500	1000pF	0.08uH	1.0E-09	5.0E-10	1	0	0	0.1
						Anti-cross talk ground wires.	12	NA		500	1000pF	0.08uH	0.0E+00	0.0E+00	0	0	0	0.1
		HSJFP J4	MDM 25 P	HSJFP P4	MDM 25S	Bolometer signals from JFP (PSW 133-144)	24	3	12-ax	500	1000pF	0.08uH	1.0E-09	5.0E-10	1	0	0	0.1
						Anti-cross talk ground wires.	12	NA		500	1000pF	0.08uH	0.0E+00	0.0E+00	0	0	0	0.1
						FPU Faraday Shield Link #			#	50		0.01uH						no

Name	128 Way Connector	FPU/JFS/JFP Connector Label	Unit Connector Type	Harness Connector Label	Harness Connector Type	Description	Number of Conductors excl. shields	Number of inner Shields	Implementation	Max. Impedance Requirements R (Ω)	C(pF)	L(uH)	Max.Current per Conductor	Average Current	Operating Mode P	Sp	CR	Max. Volts
C10	CVV 10	HSFPU J19	MDM 37 S	HSFPU P19	MDM 37P	Sorption Pump Heater	4	0	TQ	10			2.5E-02	6.3E-03	0	0	1	
						Evaporator HS Heater	4	0	TQ	50			1.5E-03	3.8E-04	0	0	1	
Aux-P						Sorption Pump HS heater	4	0	TQ	50			1.5E-03	3.8E-04	1	1	1	
						Various cooler thermistors	20	5	STQ	1000			1.0E-06	1.0E-06	1	1	1	
		HSFPU J21	MDM 37 S	HSFPU P21	MDM 37P	Spectrometer Stimulus Thermistors	12	3	STQ	1000			1.0E-06	1.0E-06	1	1	0	
						Spectrometer Stimulus Heater 4%	4	0	TQ	30			9.0E-03	2.3E-03	0	1	0	
						Spectrometer Stimulus Heater 2%	4	0	TQ	30			7.0E-03	1.8E-03	0	1	0	
		HSFPU J23	MDM 37 S	HSFPU P23	MDM 37P	FPU Thermometry	24	6	STQ	1000			1.0E-06	1.0E-06	1	1	1	
						300mK Thermal Control Heater	4	1	STQ	30			2.0E-03	5.0E-04	1	0	0	
						FPU Faraday Shield Link #			#	50		0.01uH						no
C11	CVV 11	HSFPU J25	MDM 37 S	HSFPU P25	MDM 37P	BSM Chopper Sensors	3	1	STT	1000			1.0E-06	1.0E-06	1	1	0	0.4
							2	1	STP	1000			1.0E-06	1.0E-06	1	1	0	
Drive-P						BSM Jiggle Sensors	3	1	STT	1000			1.0E-06	1.0E-06	1	1	0	
							2	1	STP	1000			1.0E-06	1.0E-06	1	1	0	
						BSM Temperature	4	1	STQ	1000			1.0E-06	1.0E-06	1	1	1	
						Photometer Stimulus Heater	4	1	STQ	10			7.0E-03	1.8E-03	1	0	0	
						BSM Launch latch sense	2	1	STP	1000			1.00E-03	0	0	0	0	
						BSM Launch latch solenoid	2	1	STT	10			3.5E-02	0	0	0	0	
						BSM Chop motor drive	4	1	STQ	10			4.0E-02	2.0E-02	1	1	0	
						BSM Jiggle motor drive	4	1	STQ	10			4.0E-02	5.0E-03	1	1	0	
		HSFPU J27	MDM 37 S	HSFPU P27	MDM 37P	SMEC Thermometry	8	2	STQ	1000			1.0E-06	1.0E-06	1	1	1	
						SMEC LVDT Primary	2	1	STP	5			5.0E-03	2.5E-03	0	1	0	5
						SMEC LVDT Secondary	4	2	STP	5			5.0E-05	5.0E-02	0	1	0	15
						SMEC Launch Latch	4	2	STP	5			4.0E-01	0.0E+00	0	0	0	15
						SMEC Launch Latch (Rob.)	4	2	STP	5			4.0E-01	0.0E+00	0	0	0	15
						SMEC Launch Latch Confirm	4	2	STP	5			1.0E-03	0.0E+00	0	0	0	15
		HSFPU J29	MDM 37 S	HSFPU P29	MDM 37P	SMEC Drive Coil	2	1	STP	5			1.0E-01	8.0E-02	0	1	0	15
						SMEC Drive (Rob.)	2	1	STP	5			1.0E-01	0.0E+00	0	1	0	15
						SMEC Drive coil voltage sensor	2	1	STP	500			1.0E-05	1.0E-05	0	1	0	15
						SMEC Position sensor supplies	2	1	STP	100			1.0E-03	1.0E-03	0	1	0	5
						SMEC LED Power	2	1	STP	100			1.0E-03	8.0E-04	0	1	0	5
						SMEC Position sensor photodiodes	6	3	STP	1000			2.0E-05	2.0E-05	0	1	0	5
						SMEC Position sensor photodiodes FB	6	3	STP	1000			1.0E-05	1.0E-05	0	1	0	5
						FPU Faraday Shield Link #			#	50		0.01uH						no

Name	128 Way Connector	FPU/JFS/JFP Connector Label	Unit Connector Type	Harness Connector Label	Harness Connector Type	Description	Number of Conductors excl. shields	Number of inner Shields	Implementation	Max. Impedance Requirements R (Ω)	C(pF)	L(uH)	Max.Current per Conductor	Average Current	Operating Mode P	Sp	CR	Max. Volts
C12 Aux-R	CVV 12	HSFPU J20	MDM 37 S	HSFPU P20	MDM 37P	Sorption Pump Heater	4	0	TQ	10			2.5E-02	0	0	0	0	
						Heat switch heaters	8	0	TQ	50			1.5E-03	0	0	0	0	
						Various cooler thermistors	20	5	STQ	1000			1.0E-06	0	0	0	0	
		HSFPU J22	MDM 37 S	HSFPU P22	MDM 37P	Spectrometer Stimulus Thermistors	12	3	STQ	1000			1.0E-06	0	0	0	0	
						Spectrometer Stimulus Heater 4%	4	0	TQ	30			9.0E-03	0	0	0	0	
						Spectrometer Stimulus Heater 2%	4	0	TQ	30			7.0E-03	0	0	0	0	
		HSFPU J24	MDM 37 S	HSFPU P24	MDM 37P	FPU Thermometry	24	6	STQ	1000			1.0E-06	0	0	0	0	
						300mK Thermal Control Heater	4	1	STQ	30			2.0E-03	0	0	0	0	
						FPU Faraday Shield Link #			#	50		0.01uH						no
C13	CVV13	HSFPU J26	MDM 37 S	HSFPU P26	MDM 37P	BSM Chopper Sensors	3	1	STT	1000			1.0E-06	0	0	0	0	0.4
							2	1	STP	1000			1.0E-06	0	0	0	0	
Drive-R						BSM Jiggle Sensors	3	1	STT	1000			1.0E-06	0	0	0	0	
							2	1	STP	1000			1.0E-06	0	0	0	0	
						BSM Temperature	4	1	STQ	1000			1.0E-06	0	0	0	0	
						Photometer Stimulus Heater	4	1	STQ	10			7.0E-03	0	0	0	0	
						BSM Launch latch sense	2	1	STP	1000			1.00E-03	0	0	0	0	
						BSM Launch latch solenoid	2	1	STT	10			3.5E-02	0	0	0	0	
						BSM Chop motor drive	4	1	STQ	10			4.0E-02	0	0	0	0	
						BSM Jiggle motor drive	4	1	STQ	10			4.0E-02	0	0	0	0	
		HSFPU J28	MDM 37 S	HSFPU P28	MDM 37P	SMEC Thermometry	8	2	STQ	1000			1.0E-06	0	0	0	0	
						SMEC LVDT Primary	2	1	STP	5			5.0E-03	0	0	0	0	5
						SMEC LVDT Secondary	4	2	STP	5			5.0E-05	0	0	0	0	15
						SMEC Launch Latch	4	2	STP	5			4.0E-01	0	0	0	0	15
						SMEC Launch Latch (Rob.)	4	2	STP	5			4.0E-01	0	0	0	0	15
						SMEC Launch Latch Confirm	4	2	STP	5			1.0E-03	0	0	0	0	15
		HSFPU J30	MDM 37 S	HSFPU P30	MDM 37P	SMEC Drive Coil	2	1	STP	5			1.0E-01	0	0	0	0	15
						SMEC Drive (Rob.)	2	1	STP	5			1.0E-01	0	0	0	0	15
						SMEC Drive coil voltage sensor	2	1	STP	500			1.0E-05	0	0	0	0	15
						SMEC Position sensor supplies	2	1	STP	100			1.0E-03	0	0	0	0	5
						SMEC LED Power	2	1	STP	100			1.0E-03	0	0	0	0	5
						SMEC Position sensor photodiodes	6	3	STP	1000			2.0E-05	0	0	0	0	5
						SMEC Position sensor photodiodes FB	6	3	STP	1000			1.0E-05	0	0	0	0	5
						FPU Faraday Shield Link #			#	50		0.01uH						no

There are three options for these links: (a) Several wires from the CVV connector contacts to the FPU system backshells as presently instructed by Alcatel, (b) a > 80% overshield braid joined to the FPU system backshells and isolated form the CVV and tailed onto CVV connector contacts to be compliant with SPIRE's grounding scheme and match the Calibration harnesses (as required by SPIRE), and (c) >80% overshield braid joined to the FPU system

ANNEX 2 – External Cryostat Wiring List

- The impedance values quoted in the tables refer to the total impedance for the "I-Harness" between the SVM Connector Panel and the Warm Electronics units and the "E-Harness" between the CVV 128-Way Connector and the SVM Connector Panel. The "I-Harness" is to be constructed from 28 AWG stranded Copper conductors as specified in §4.1.
- The BSM and SMEC Launch lock confirm cables and the Shutter tails terminate at skin connectors near the CVV 128-Way connectors. Shading indicates these functions.
- * On each harness, a continuous braided RF overshield joined to the backs of the CVV connectors, passing through the SVM bracket connectors via their backshells and joining to the DRCU connector backshells
- This is the listing for the S-Harnesses. The impedance values are assumed to apply to the I-Harnesses

Name	128 Way Connector	DRCU Connector Label	DRCU Connector Type	Harness Connector Label	Harness Connector Type	Description	Number of Conductors excl. shlds	Number of inner Shields	Implementation	Max. Impedance Requirements			Max.Current per Conductor	Average	Operating Mode		
										R (W)	C(pF)	L(uH)			P	Sp	CR
I1/S1 Type3	CVV 1	DCU J27	DCMA37 P	DCU P27	DCMA 37S	Bolometer signals from JFS (SLW 1-12)	24	12	STP	500	1500pF	0.08uH	1.00E-09	5.00E-10	0	1	0
						SLW Ground	1	0	S	50	1500pF	0.08uH	0	0	0	0	0
		DCU J28	DCMA37 P	DCU P28	DCMA 37 S	Bolometer signals from JFS (SLW 13-24)	24	12	STP	500	1500pF	0.08uH	1.00E-09	5.00E-10	0	1	0
						SLW Ground	1	0	S	50	1500pF	0.08uH	0	0	0	0	0
		DCU J31	DCMA 37S	DCU P31	DCMA 37 P	PTC Bias	2	1	STP	100	1500pF	0.08uH	3.20E-08	8.00E-09	1	0	0
						PTC Ground wire	1	0	S	50	1500pF	0.08uH	0	0	0	0	0
						PTC JFET Bias	2	1	STP	100	1500pF	0.08uH	5.00E-03	2.00E-04	1	0	0
						SLW Bolometer Bias	4	2	STP	100	1500pF	0.08uH	9.60E-08	2.40E-08	0	1	0
						SLW JFET Bias	4	2	STP	100	1500pF	0.08uH	2.50E-03	6.00E-04	0	1	0
						SLW Ground wire	1	0	S	50	1500pF	0.08uH	0	0	0	0	0
						SSW Bolometer Bias	4	2	STP	100	1500pF	0.08uH	1.20E-03	4.80E-08	0	1	0
						SSW JFET Bias	4	2	STP	100	1500pF	0.08uH	5.00E-03	1.20E-03	0	1	0
						SSW Ground Wire	1	0	S	50	1500pF	0.08uH	0	0	0	0	0
						FPU Faraday Shield Link	1	0	S	50	1500pF	0.08uH	0	0	0	0	0
						PTC JFET Heater	2	1	STP	200	1500pF	0.08uH	1.92E-03	4.81E-04	0	0	0
						SLW JFET Heater	2	1	STP	200	1500pF	0.08uH	3.33E-03	8.33E-04	0	0	0
						SSW JFET Heater	2	1	STP	200	1500pF	0.08uH	6.67E-03	1.67E-03	0	0	0
		DCU J32	DCMA 37S	DCU P32	DCMA 37 P	PTC Bias	2	1	STP	100	1500pF	0.08uH	3.20E-08	8.00E-09	0	0	0
						PTC Ground wire	1	0	S	50	1500pF	0.08uH	0	0	0	0	0
						PTC JFET Bias	2	1	STP	100	1500pF	0.08uH	5.00E-03	2.00E-04	0	0	0
						SLW Bolometer Bias	4	2	STP	100	1500pF	0.08uH	9.60E-08	2.40E-08	0	0	0
						SLW JFET Bias	4	2	STP	100	1500pF	0.08uH	2.50E-03	6.00E-04	0	0	0
						SLW Ground wire	1	0	S	50	1500pF	0.08uH	0	0	0	0	0
						SSW Bolometer Bias	4	2	STP	100	1500pF	0.08uH	1.20E-03	4.80E-08	0	0	0
						SSW JFET Bias	4	2	STP	100	1500pF	0.08uH	5.00E-03	1.20E-03	0	0	0
						SSW Ground Wire	1	0	S	50	1500pF	0.08uH	0	0	0	0	0
						FPU Faraday Shield Link	1	0	S	50	1500pF	0.08uH	0	0	0	0	0
						PTC JFET Heater	2	1	STP	200	1500pF	0.08uH	1.92E-03	4.81E-04	0	0	0
						SLW JFET Heater	2	1	STP	200	1500pF	0.08uH	3.33E-03	8.33E-04	0	0	0
						SSW JFET Heater	2	1	STP	200	1500pF	0.08uH	6.67E-03	1.67E-03	0	0	0
		Shields*				RF Overshield			>80%			0.01uH					

Name	128 Way Connector	DRCU Connector Label	DRCU Connector Type	Harness Connector Label	Harness Connector Type	Description	Number of Conductors excl. shlds	Number of inner Shields	Implementation	Max. Impedance Requirements R (W)	C(pF)	L(uH)	Max.Current per Conductor	Average	Operating Mode P	Sp	CR
I2/S2 Type4	CVV 2	DCU J23	DCMA37 P	DCU P23	DCMA 37 S	Bolometer signals from JFS (SSW 1-12)	24	12	STP	500	1500pF	0.08uH	1.00E-09	5.00E-10	0	1	0
						FPU Faraday Shield Link	1	0	Single	50	1500pF	0.08uH	0.0	0.0	0	0	0
		DCU J24	DCMA37 P	DCU P24	DCMA 37 S	Bolometer signals from JFS (SSW 13-24)	24	12	STP	500	1500pF	0.08uH	1.00E-09	5.00E-10	0	1	0
						SSW Ground Wire	1	0	Single	50	1500pF	0.08uH	0.0	0.0	0	0	0
		DCU J25	DCMA37 P	DCU P25	DCMA 37 S	Bolometer signals from JFS (SSW 25-36)	24	12	STP	500	1500pF	0.08uH	1.00E-09	5.00E-10	0	1	0
						FPU Faraday Shield Link	1	0	Single	50	1500pF	0.08uH	0.0	0.0	0	0	0
		DCU J26	DCMA37 P	DCU P26	DCMA 37 S	Bolometer signals from JFS (SSW 37-42)	12	6	STP	500	1500pF	0.08uH	1.00E-09	5.00E-10	0	1	0
						SSW Ground Wire	1	0	Single	50	1500pF	0.08uH	0.0	0.0	0	0	0
		Shields*				RF Overshield			>80%			0.01uH					
I3/S3 Type2	CVV 3	DCU J29	DDMA 78S	DCU P29	DDMA 78 P	PSW JFET Bias	12	6	STP	100	1500pF	0.08uH	5.00E-03	1.20E-03	1	0	0
						PSW Ground	1	0	S	50	1500pF	0.08uH	0	0	0	0	0
						PSW Bolometer Bias	6	3	STP	100	1500pF	0.08uH	3.84E-07	9.60E-08	1	0	0
						PSW Heater	6	3	STP	200	1500pF	0.08uH	3.85E-03	9.62E-04	0	0	0
						FPU Faraday Shield Link	1	0	S	50	1500pF	0.08uH	0	0	0	0	0
						PMW JFET Bias	8	4	STP	100	1500pF	0.08uH	5.00E-03	1.20E-03	1	0	0
						PMW Bolometer Bias	4	2	STP	100	1500pF	0.08uH	3.84E-07	9.60E-08	1	0	0
						PMW Ground	1	0	S	50	1500pF	0.08uH	0	0	0	0	0
						PMW JFET Heater	4	2	STP	200	1500pF	0.08uH	3.85E-03	9.62E-04	0	0	0
						PLW JFET Heater	2	1	STP	200	1500pF	0.08uH	3.85E-03	9.62E-04	0	0	0
						PLW JFET Bias	4	2	STP	100	1500pF	0.08uH	5.00E-03	1.20E-03	1	0	0
						PLW Bolometer Bias	4	2	STP	100	1500pF	0.08uH	1.92E-07	4.80E-08	1	0	0
						PLW Ground	1	0	S	50	1500pF	0.08uH	0	0	0	0	0
		DCU J30	DDMA 78S	DCU P30	DDMA 78 P	PSW JFET Bias	12	6	STP	100	1500pF	0.08uH	5.00E-03	1.20E-03	0	0	0
						PSW Ground	1	0	S	50	1500pF	0.08uH	0.00E+00	0.00E+00	0	0	0
						PSW Bolometer Bias	6	3	STP	100	1500pF	0.08uH	0.0	0.0	0	0	0
						PSW Heater	6	3	STP	200	1500pF	0.08uH	3.85E-03	9.62E-04	0	0	0
						FPU Faraday Shield Link	1	0	S	50	1500pF	0.08uH	0.0	0.0	0	0	0
						PMW JFET Bias	8	4	STP	100	1500pF	0.08uH	5.00E-03	1.20E-03	0	0	0
						PMW Bolometer Bias	4	2	STP	100	1500pF	0.08uH	3.84E-07	9.60E-08	0	0	0
						PMW Ground	1	0	S	50	1500pF	0.08uH	0	0	0	0	0
						PMW JFET Heater	4	2	STP	200	1500pF	0.08uH	3.85E-03	9.62E-04	0	0	0
						PLW JFET Heater	2	1	STP	200	1500pF	0.08uH	3.85E-03	9.62E-04	0	0	0
						PLW JFET Bias	4	2	STP	100	1500pF	0.08uH	5.00E-03	1.20E-03	0	0	0
						PLW Bolometer Bias	4	2	STP	100	1500pF	0.08uH	1.92E-07	4.80E-08	0	0	0
						PLW Ground	1	0	S	50	1500pF	0.08uH	0	0	0	0	0
		Shields*				RF Overshield			>80%			0.01uH					

Name	128 Way Connector	DRCU Connector Label	DRCU Connector Type	Harness Connector Label	Harness Connector Type	Description	Number of Conductors excl. shlds	Number of inner Shields	Implementation	Max. Impedance Requirements			Max.Current per Conductor	Average	Operating Mode		
										R (W)	C(pF)	L(uH)			P	Sp	CR
I4/S4 Type1	CVV 4	DCU J20	DDMA 50 P	DCU P20	DDMA 50 S	16 ch. PMW (1-16)	32	16	STP	500	1500pF	0.08uH	1.00E-09	5E-10	1	0	0
						Ground Wire	1	0	S	50	1500pF	0.08uH	0	0	0	0	0
						FPU Faraday Shield Link	1	0	S	50	1500pF	0.08uH	0	0	0	0	0
		DCU J21	DDMA 50 P	DCU P21	DDMA 50 S	16 ch. PMW (17-32)	32	16	STP	500	1500pF	0.08uH	1.00E-09	5E-10	1	0	0
						Ground Wire	1	0	S	50	1500pF	0.08uH	0	0	0	0	0
						FPU Faraday Shield Link	1	0	S	50	1500pF	0.08uH	0	0	0	0	0
		DCU J22	DDMA 50 P	DCU P22	DDMA 50 S	16 ch. PMW (33-48)	32	16	STP	500	1500pF	0.08uH	1.00E-09	5E-10	1	0	0
						Ground Wire	1	0	S	50	1500pF	0.08uH	0	0	0	0	0
						FPU Faraday Shield Link	1	0	S	50	1500pF	0.08uH	0	0	0	0	0
		Shields*				RF Overshield			>80%			0.01uH					
I5/S5 Type1	CVV 5	DCU J17	DDMA 50 P	DCU P17	DDMA 50 S	16 ch. PMW (49-64)	32	16	STP	500	1500pF	0.08uH	1.00E-09	5E-10	1	0	0
						Ground Wire	2	0	S	50	1500pF	0.08uH	0	0	0	0	0
						FPU Faraday Shield Link	1	0	S	50	1500pF	0.08uH	0	0	0	0	0
		DCU J18	DDMA 50 P	DCU P18	DDMA 50 S	16 ch. PMW (65-80)	32	16	STP	500	1500pF	0.08uH	1.00E-09	5E-10	1	0	0
						Ground Wire	2	0	S	50	1500pF	0.08uH	0	0	0	0	0
						FPU Faraday Shield Link	1	0	S	50	1500pF	0.08uH	0	0	0	0	0
		DCU J19	DDMA 50 P	DCU P19	DDMA 50 S	16 ch. PMW (81-96)	32	16	STP	500	1500pF	0.08uH	1.00E-09	5E-10	1	0	0
						Ground Wire	2	0	S	50	1500pF	0.08uH	0	0	0	0	0
						FPU Faraday Shield Link	1	0	S	50	1500pF	0.08uH	0	0	0	0	0
		Shields*				RF Overshield			>80%			0.01uH					
I6/S6 Type1	CVV 6	DCU J14	DDMA 50 P	DCU P14	DDMA 50 S	16 ch. PLW (1-16)	32	16	STP	500	1500pF	0.08uH	1.00E-09	5E-10	1	0	0
						Ground Wire	2	0	S	50	1500pF	0.08uH	0	0	0	0	0
						FPU Faraday Shield Link	1	0	S	50	1500pF	0.08uH	0	0	0	0	0
		DCU J15	DDMA 50 P	DCU P15	DDMA 50 S	16 ch. PLW (17-32)	32	16	STP	500	1500pF	0.08uH	1.00E-09	5E-10	1	0	0
						Ground Wire	1	0	S	50	1500pF	0.08uH	0	0	0	0	0
						FPU Faraday Shield Link	1	0	S	50	1500pF	0.08uH	0	0	0	0	0
		DCU J16	DDMA 50 P	DCU P16	DDMA 50 S	16 ch. PLW (33-48)	32	16	STP	500	1500pF	0.08uH	1.00E-09	5E-10	1	0	0
						Ground Wire	1	0	S	50	1500pF	0.08uH	0	0	0	0	0
						FPU Faraday Shield Link	1	0	S	50	1500pF	0.08uH	0	0	0	0	0
		Shields*				RF Overshield			>80%			0.01uH					
I7/S7 Type1	CVV 7	DCU J11	DDMA 50 P	DCU P11	DDMA 50 S	16 ch. PSW (1-16)	32	16	STP	500	1500pF	0.08uH	1.00E-09	5E-10	1	0	0
						Ground Wire	1	0	S	50	1500pF	0.08uH	0	0	0	0	0
						FPU Faraday Shield Link	1	0	S	50	1500pF	0.08uH	0	0	0	0	0
		DCU J12	DDMA 50 P	DCU P12	DDMA 50 S	16 ch. PSW (17-32)	32	16	STP	500	1500pF	0.08uH	1.00E-09	5E-10	1	0	0
						Ground Wire	1	0	S	50	1500pF	0.08uH	0	0	0	0	0
						FPU Faraday Shield Link	1	0	S	50	1500pF	0.08uH	0	0	0	0	0
		DCU J13	DDMA 50 P	DCU P13	DDMA 50 S	16 ch. PSW (33-48)	32	16	STP	500	1500pF	0.08uH	1.00E-09	5E-10	1	0	0
						Ground Wire	1	0	S	50	1500pF	0.08uH	0	0	0	0	0
						FPU Faraday Shield Link	1	0	S	50	1500pF	0.08uH	0	0	0	0	0
		Shields*				RF Overshield			>80%			0.01uH					

Name	128 Way Connector	DRCU Connector Label	DRCU Connector Type	Harness Connector Label	Harness Connector Type	Description	Number of Conductors excl. shlds	Number of inner Shields	Implementation	Max. Impedance Requirements R (W)	C(pF)	L(uH)	Max.Current per Conductor	Average	Operating Mode P	Sp	CR
I8/S8 Type1	CVV 8	DCU J8	DDMA 50 P	DCU P8	DDMA 50 S	16 ch. PSW (49-64)	32	16	STP	500	1500pF	0.08uH	1.00E-09	5E-10	1	0	0
						Ground Wire	1	0	S	50	1500pF	0.08uH	0	0	0	0	0
						FPU Faraday Shield Link	1	0	S	50	1500pF	0.08uH	0	0	0	0	0
		DCU J9	DDMA 50 P	DCU P9	DDMA 50 S	16 ch. PSW (65-80)	32	16	STP	500	1500pF	0.08uH	1.00E-09	5E-10	1	0	0
						Ground Wire	2	0	S	50	1500pF	0.08uH	0	0	0	0	0
						FPU Faraday Shield Link	1	0	S	50	1500pF	0.08uH	0	0	0	0	0
		DCU J10	DDMA 50 P	DCU P10	DDMA 50 S	16 ch. PSW (81-96)	32	16	STP	500	1500pF	0.08uH	1.00E-09	5E-10	1	0	0
						Ground Wire	1	0	S	50	1500pF	0.08uH	0	0	0	0	0
						FPU Faraday Shield Link	1	0	S	50	1500pF	0.08uH	0	0	0	0	0
		Shields*				RF Overshield			>80%			0.01uH					
I9/S9 Type1	CVV 9	DCU 5	DDMA 50 P	DCU P5	DDMA 50 S	16 ch. PMW (97-112)	32	16	STP	500	1500pF	0.08uH	1.00E-09	5E-10	1	0	0
						Ground Wire	1	0	S	50	1500pF	0.08uH	#REF!	0	0	0	0
						FPU Faraday Shield Link	1	0	S	50	1500pF	0.08uH	0	0	0	0	0
		DCU J6	DDMA 50 P	DCU P6	DDMA 50 S	16 ch. PMW (113-128)	32	16	STP	500	1500pF	0.08uH	1.00E-09	5E-10	1	0	0
						Ground Wire	1	0	S	50	1500pF	0.08uH	0	0	0	0	0
						FPU Faraday Shield Link	1	0	S	50	1500pF	0.08uH	0	0	0	0	0
		DCU J7	DDMA 50 P	DCU P7	DDMA 50 S	16 ch. PMW (129-144)	32	16	STP	500	1500pF	0.08uH	1.00E-09	5E-10	1	0	0
						Ground Wire	1	0	S	50	1500pF	0.08uH	0	0	0	0	0
						FPU Faraday Shield Link	1	0	S	50	1500pF	0.08uH	0	0	0	0	0
		Shields*				RF Overshield			>80%			0.01uH					
I10/S10 Aux-P	CVV 10	FCU J11	DBMA 25 S	FCU P11	DBMA 25 P	Sorption Pump Heater	4	0	TQ	10			2.50E-02	6.25E-03	0	0	1
						Evaporator HS Heater	4	0	TQ	50			1.50E-03	3.75E-04	0	0	1
						Sorption Pump HS heater	4	0	TQ	50			1.50E-03	3.75E-04	1	1	1
						300mK Thermal Control Heater	4	1	STQ	100			2.00E-03	5.00E-04	1	0	0
						Spectrometer Stimulus Heater 4%	4	0	TQ	30			9.00E-03	2.25E-03	0	1	0
						Spectrometer Stimulus Heater 2%	4	0	TQ	30			7.00E-03	1.75E-03	0	1	0
		FCUJ23	DDMA 50 S	FCU P23	DAMA 50 P	FPU Thermometry A	44	11	STQ	1000			1.00E-06	1.00E-06	1	1	1
						FPU Faraday Shield Link	1	0	S	50	1500pF	0.08uH	0	0	0	0	0
		FCUJ25	DAMA 15 S	FCU P25	DAMA 15 P	FPU Thermometry B	12	3	STQ	1000			1.00E-06	1.00E-06	1	1	1
		Shields*				RF Overshield			>80%			0.01uH					

Name	128 Way Connector	DRCU Connector Label	DRCU Connector Type	Harness Connector Label	Harness Connector Type	Description	Number of Conductors excl. shlds	Number of inner Shields	Implementation	Max. Impedance Requirements R (W)	C(pF)	L(uH)	Max.Current per Conductor	Average	Operating Mode P	Sp	CR
I11/S11	CVV 11	FCU J21	DAMA 15 S	FCU P21	DAMA 15 P	FPU Thermometry C	12	3	STQ	1000			1.00E-06	0.000001	1	1	1
Drive-P		FCU J19	DCMA 37 S	FCU P19	DCMA 37 P	BSM Chop/Jiggle Sensors	4	2	STP	1000			1.00E-06	1.00E-06	1	1	0
						BSM Chop/Jiggle Sensors	6	2	STT	1000			1.00E-06	1.00E-06	1	1	0
						BSM Launch latch sense	2	1	STP	1000			0.001	0	0	0	0
						BSM Launch latch solenoid	2	1	STP	10			0.035	0	0	0	0
						BSM Chop motor drive	4	1	STQ	10			0.04	0.02	1	1	0
						BSM Jiggle motor drive	4	1	STQ	10			0.04	0.005	1	1	0
		FCU J29	DCMA 37 P	FCU P29	DCMA 37 S	SMEC LVDT Primary	2	1	STP	5			0.005	0.0025	0	1	0
						SMEC LVDT Secondary	4	2	STP	50			0.00005	0.00005	0	1	0
						SMEC Launch Latch1	4	2	STP	5			0.4		0	0	0
						SMEC Launch Latch1 Confirm	2	1	STP	5			0.001		0	0	0
						SMEC Launch Latch2	4	2	STP	5			0.4		0	0	0
						SMEC Launch Latch2 Confirm	2	1	STP	5			0.001		0	0	0
		FCU J17	DCMA 37 S	FCU P17	DCMA 37 P	SMEC Drive Coil	2	1	STP	5			0.1	0.08	0	1	0
						SMEC Drive Coil (Rob.)	2	1	STP	5			0.1	0	0	1	0
						SMEC Drive coil voltage sensor	2	1	STP	500			0.00001		0	1	0
						SMEC Position sensor supplies	4	2	STP	100			0.001		0	1	0
						SMEC Position sensor photodiodes	6	3	STP	1000			0.00002		0	1	0
						SMEC Position sensor photodiodes FB	6	3	STP	1000			0.00001		0	1	0
						FPU Faraday Shield Link	1	0	S	50	1500pF	0.08uH	0	0	0	0	0
		JB	10/35	Blanking Cover		Mechanisms Launch Lock Confirm	6	3	STP	1000			0	0	0	0	0
		FCU J13	DEMA 9 S	FCU P13	DEMA 9P	P-Cal Heater	4	1	STQ	10			0.007	0.00175	1	0	0
		Shields*				RF Overshield			>80%			0.01uH					
I12/S12 Aux-R	CVV 12	FCU J12	DBMA 25 S	FCU P12	DBMA 25 P	Sorption Pump Heater	4	0	TQ	10			2.50E-02	0	0	0	0
						Heat switch heaters	8	0	TQ	50			1.50E-03	0	0	0	0
						300mK Thermal Control Heater	4	1	STQ	100			2.00E-03	0	0	0	0
						Spectrometer Stimulus Heater 4%	4	0	TQ	30			9.00E-03	0	0	0	0
						Spectrometer Stimulus Heater 2%	4	0	TQ	30			7.00E-03	0	0	0	0
		FCUJ24	DDMA 50 S	FCU P24	DDMA 50 P	FPU Thermometry A	44	11	STQ	1000			1.00E-06	0	0	0	0
						FPU Faraday Shield Link	1	0	S	50	1500pF	0.08uH	0	0	0	0	0
		FCUJ26	DAMA 15 S	FCU P26	DAMA 15 P	FPU Thermometry B	12	3	STQ	1000			1.00E-06	0	0	0	0
		Shields*				RF Overshield			>80%			0.01uH					

Name	128 Way Connector	DRCU Connector Label	DRCU Connector Type	Harness Connector Label	Harness Connector Type	Description	Number of Conductors excl. shlds	Number of inner Shields	Implementation	Max. Impedance Requirements R (W)	C(pF)	L(uH)	Max.Current per Conductor	Average	Operating Mode P	Sp	CR
I13/S13 Drive-R	CVV 13	FCU J22	DAMA 15 S	FCU P22	DAMA 15 P	FPU Thermometry C	12	3	STQ	1000			1.00E-06	0	0	0	0
		FCU J20	DCMA 37 S	FCU P20	DCMA 37 P	BSM Chop/Jiggle Sensors	4	2	STP	1000			1.00E-06	0	0	0	0
						BSM Chop/Jiggle Sensors	6	2	STT	1000			1.00E-06	0	0	0	0
						BSM Launch latch sense	2	1	STP	1000			0.001	0	0	0	0
						BSM Launch latch solenoid	2	1	STP	10			0.035	0	0	0	0
						BSM Chop motor drive	4	1	STQ	10			0.04	0	0	0	0
						BSM Jiggle motor drive	4	1	STQ	10			0.04	0	0	0	0
		FCU J30	DCMA 37 P	FCU P30	DCMA 37 S	SMEC LVDT Primary	2	1	STP	5			0.005	0	0	0	0
						SMEC LVDT Secondary	4	2	STP	50			0.00005	0	0	0	0
						SMEC Launch Latch1	4	2	STP	5			0.4	0	0	0	0
						SMEC Launch Latch1 Confirm	2	1	STP	5			0.001	0	0	0	0
						SMEC Launch Latch2	4	2	STP	5			0.4	0	0	0	0
						SMEC Launch Latch2 Confirm	2	1	STP	5			0.001	0	0	0	0
		FCU J18	DCMA 37 S	FCU P18	DCMA 37 P	SMEC Drive Coil	2	1	STP	5			0.1	0	0	0	0
						SMEC Drive Coil (Rob.)	2	1	STP	5			0.1	0	0	0	0
						SMEC Drive coil voltage sensor	2	1	STP	500			0.00001	0	0	0	0
						SMEC Position sensor supplies	4	2	STP	100			0.001	0	0	0	0
						SMEC Position sensor photodiodes	6	3	STP	1000			0.00002	0	0	0	0
						SMEC Position sensor photodiodes FB	6	3	STP	1000			0.00001	0	0	0	0
						FPU Faraday Shield Link	1	0	S	50	1500pF	0.08uH	0	0	0	0	0
		JD	10/35	Blanking Cover		Mechanisms Launch Lock Confirm	6	3	STP	1000			0	0	0	0	0
		FCU J14	DEMA 9S	FCU P14	DEMA 9P	P-Cal Heater	4	2	STP	10			0.007	0	0	0	0
		Shields*				RF Overshield			>80%			0.01uH					

Annex 3 - BDA Channels

CROSS-REFERENCE OF SPIRE CHANNELS TO HARNESSING NAMES

Most of this information can be worked out by following the Spire block diagram but it is included here for ease of reference.

BDA	PLW		PMW				PSW						SLW	SSW	
JPL BDA #	10209800-1		10209800-2				10209800-3						1...00-4	10209800-5	
C/I Harness	6		5		4		9		8		7		half 1	2	
Nanonics # / Channel	J05	J06	J01	J02	J03	J04	J01	J02	J03	J04	J05	J06	J05	J05	J06
A	1	25	1	25	49	73	1	25	49	73	97	121	1	1	25
B	2	26	2	26	50	74	2	26	50	74	98	122	2	2	26
C	3	27	3	27	51	75	3	27	51	75	99	123	3	3	27
D	4	28	4	28	52	76	4	28	52	76	100	124	4	4	28
E	5	29	5	29	53	77	5	29	53	77	101	125	5	5	29
F	6	30	6	30	54	78	6	30	54	78	102	126	6	6	30
G	7	31	7	31	55	79	7	31	55	79	103	127	7	7	31
H	8	32	8	32	56	80	8	32	56	80	104	128	8	8	32
I	9	33	9	33	57	81	9	33	57	81	105	129	9	9	33
J	10	34	10	34	58	82	10	34	58	82	106	130	10	10	34
K	11	35	11	35	59	83	11	35	59	83	107	131	11	11	35
L	12	36	12	36	60	84	12	36	60	84	108	132	12	12	36
M	13	37	13	37	61	85	13	37	61	85	109	133	13	13	37
N	14	38	14	38	62	86	14	38	62	86	110	134	14	14	38
P	15	39	15	39	63	87	15	39	63	87	111	135	15	15	39
R	16	40	16	40	64	88	16	40	64	88	112	136	16	16	40
S	17	41	17	41	65	89	17	41	65	89	113	137	17	17	41
T	18	42	18	42	66	90	18	42	66	90	114	138	18	18	42
U	19	43	19	43	67	91	19	43	67	91	115	139	19	19	43
V	20	44	20	44	68	92	20	44	68	92	116	140	20	20	44
W	21	45	21	45	69	93	21	45	69	93	117	141	21	21	45
X	22	46	22	46	70	94	22	46	70	94	118	142	22	22	46
Y	23	47	23	47	71	95	23	47	71	95	119	143	23	23	47
Z	24	48	24	48	72	96	24	48	72	96	120	144	24	24	48

Within the C/I harness listings, channel numbers are shown in modulo 48

Annex 4 - What is 12-ax?

This cable form is maybe not self-explanatory in the same way as the others in this document. A rather specific format of 12-ax is intended.

It is drawn in diagrams as:

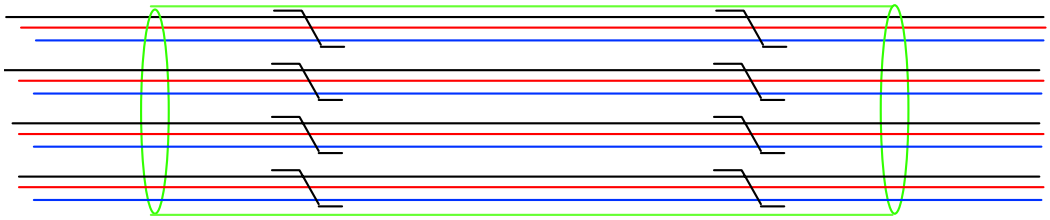

This consists of 4 twisted triples, each triple being three insulated multicore wires, inside one braided shield, all inside an outer insulator.

The material, identified by JPL, uses stainless steel for all conductors, nominally 38AWG.

Using the black wires as screens for twisted pairs (red and blue), capacitance and thermal conductivity are low compared to four screened twisted pairs and cross talk is apparently acceptable.

Note that the outer screen is also quite lightweight, and for this reason it is not used as the main RF shield on harnesses in Spire.

Annex 5 – CVV Bulkhead EMI Backshells

Space Side: The overshields of the cryoharnesses I1-I13 between the DRCU and the 128-way connectors in the wall of the cryostat are terminated at the EMI backshell as shown below. Links to the overshields of the C1-13 harnesses pass through contacts in the 128-way connectors and are carried as wires to the DRCU connectors.

Inside Cryostat: The overshields of the C1-13 harnesses from the 128-way connectors to the FPU /JFP/JFS are isolated from the connector body and have pig tails to contacts. This overshield remains electrically isolated from the cryostat chassis by the insulation shown. An extended backshell, possibly composed of a normal backshell connected to wire braid, passes a TBD distance back along the harness to close off the Faraday shield.

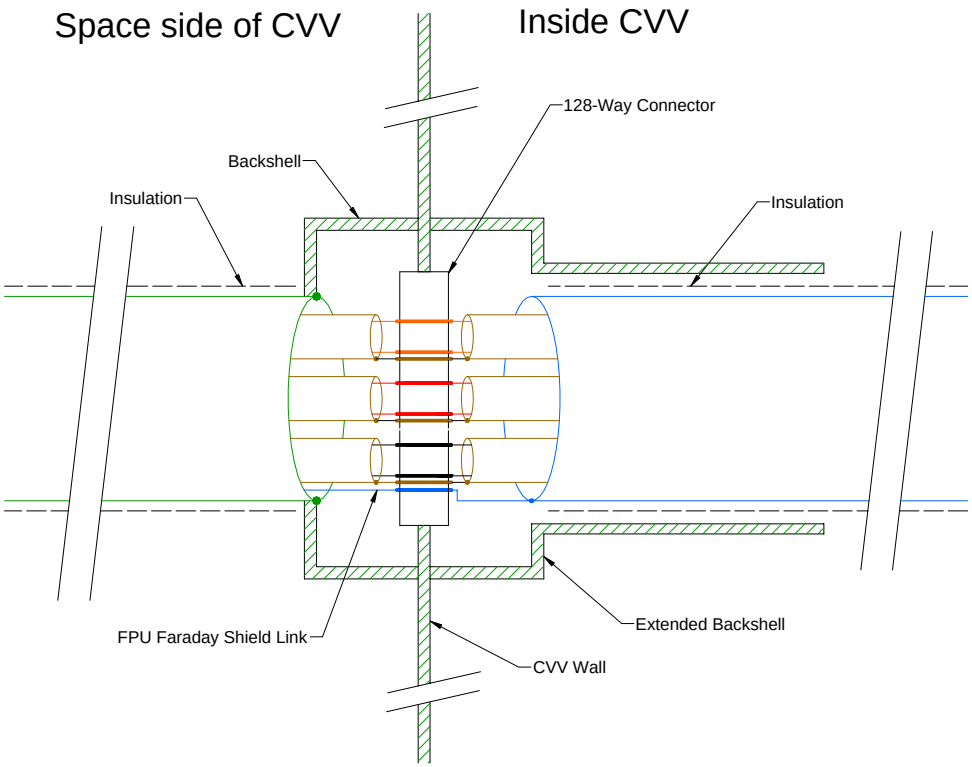

Annex 6 - SPIRE Grounding Diagram

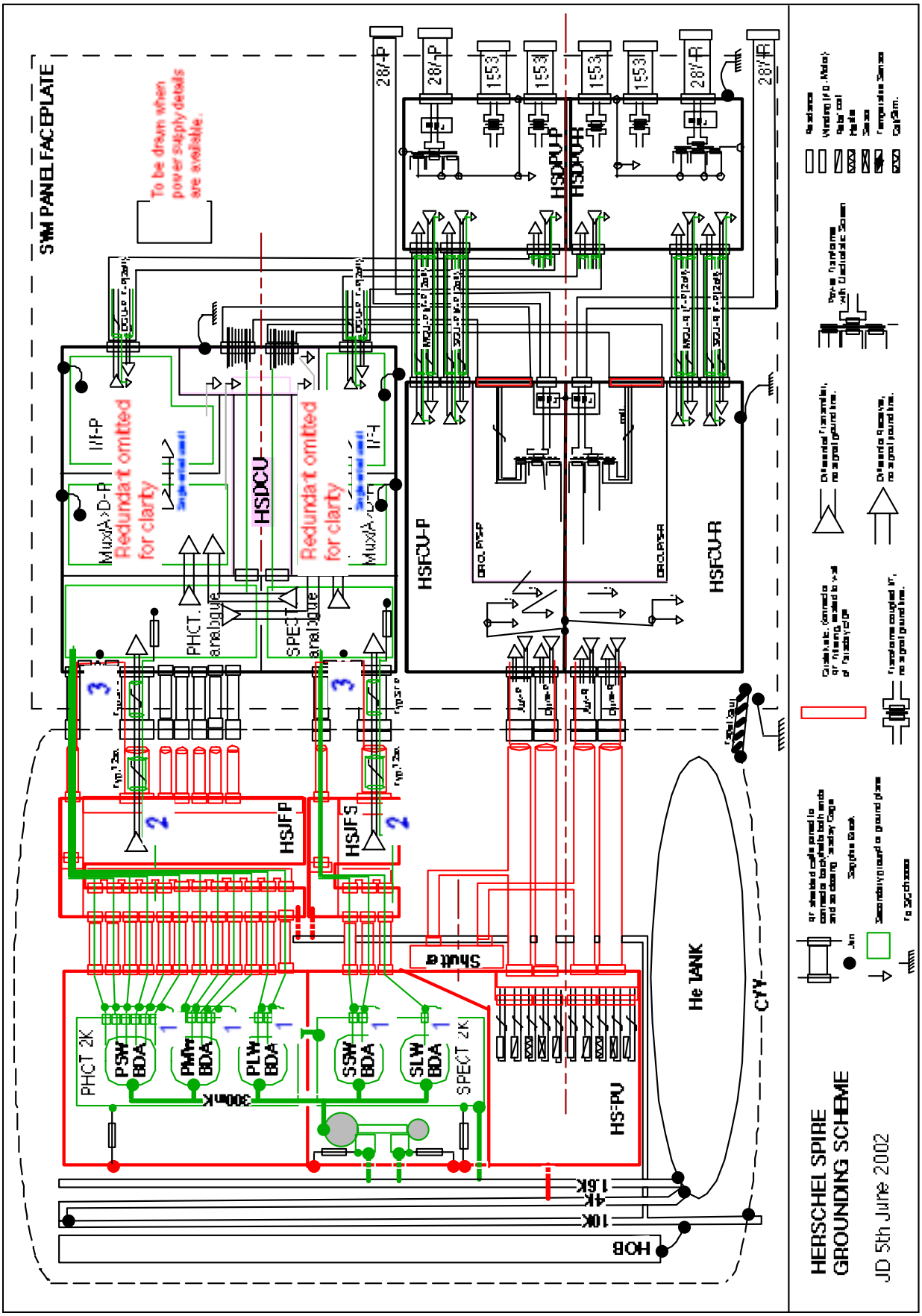

Annex 7 – PTC Cryoharnessing

The three channels from the PTC thermistors are conditioned in the Spectrometer JFET module (JFS). The signals are readout by the Photometer LIAs

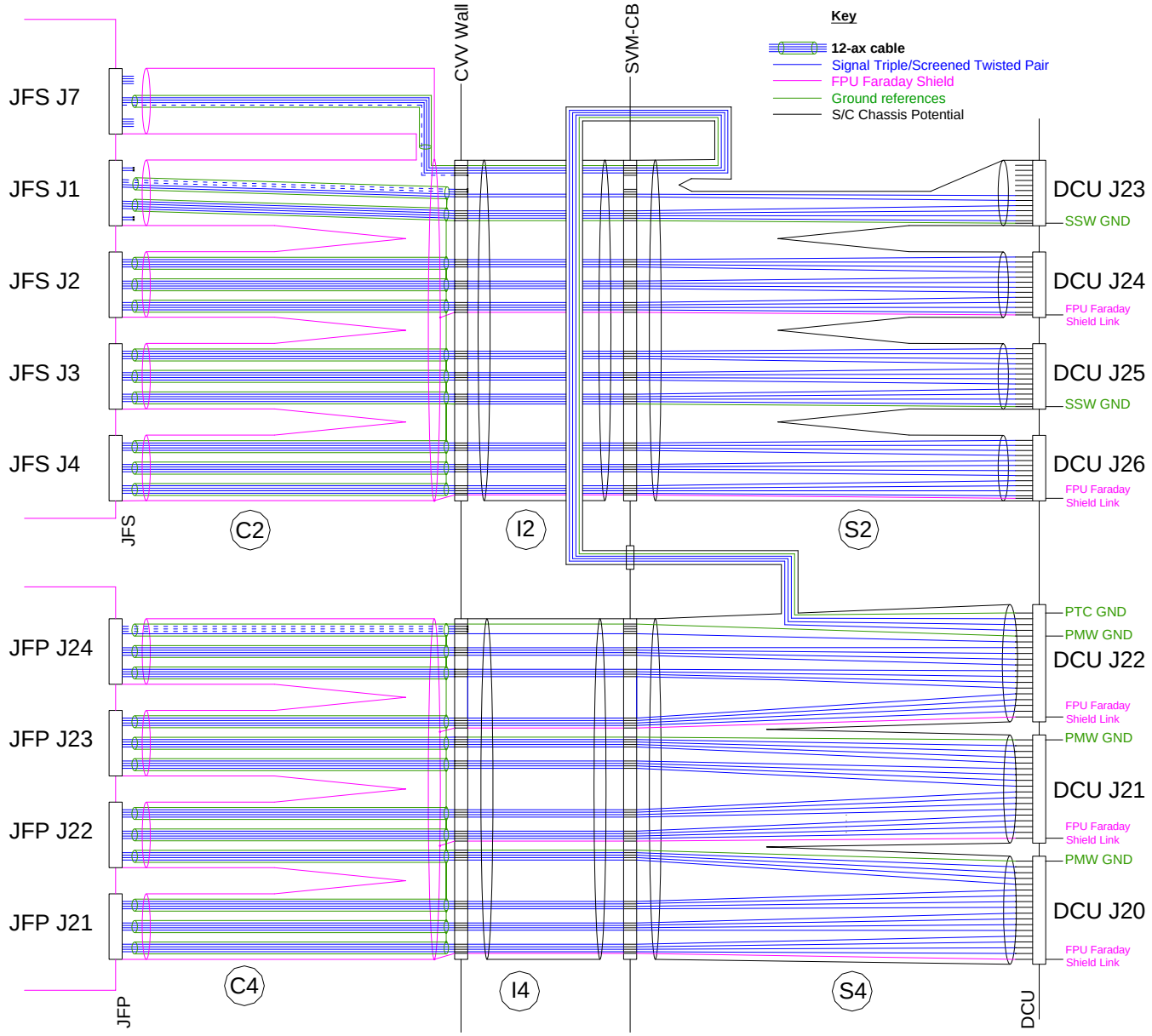

Figure 4-1

End of Doc.

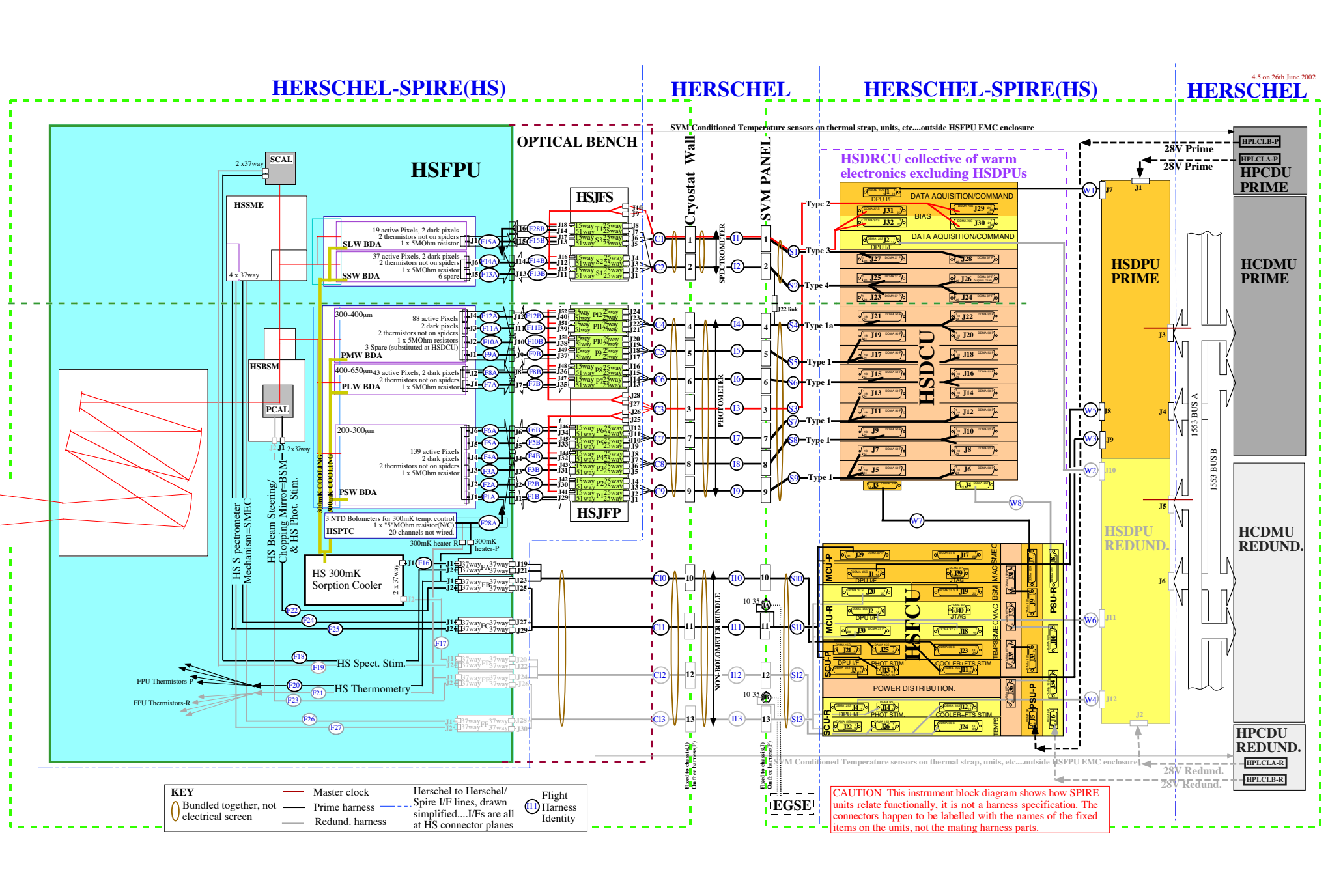
4.5 on 26th June 2002
HERSCHEL-SPIRE(HS)
HERSCHEL
HERSCHEL-SPIRE(HS)
HERSCHEL
HSFPU
OPTICAL BENCH
SCAL
2 x37way
HSSME
4 x 37way
SLW BDA
19 active Pixels, 2 dark pixels
2 thermistors not on spiders
1 x 5MOhm resistor
SSW BDA
37 active Pixels, 2 dark pixels
2 thermistors not on spiders
1 x 5MOhm resistor
6 spare
HSJFS
PMW BDA
300-400μm
88 active Pixels
2 dark pixels
2 thermistors not on spiders
1 x 5MOhm resistors
3 Spare (substituted at HSDCU)
PLW BDA
400-650μm
43 active Pixels, 2 dark pixels
2 thermistors not on spiders
1 x 5MOhm resistor
HSBSM
PCAL
2x37way
PSW BDA
200-300μm
139 active Pixels
2 dark pixels
2 thermistors not on spiders
1 x 5MOhm resistor
300mK COOLING
300mK COOLING
HSJFP
3 NTD Bolometers for 300mK temp. control
1 x "5"MOhm resistor(N/C)
HSPTC
20 channels not wired.
300mK heater-R
300mK heater-P
HS 300mK Sorption Cooler
2 x 37way
HS S pectrometer Mechanism=SMEC
HS Beam Steering/ Chopping Mirror=BSM & HS Phot. Stim.
HS Spect. Stim.
HS Thermometry
FPU Thermistors-P
FPU Thermistors-R
Cryostat Wall
SVM PANEL
SPECTROMETER
PHOTOMETER
NON-BOLOMETER BUNDLE
J22 link
SVM Conditioned Temperature sensors on thermal strap, units, etc....outside HSFPU EMC enclosure
HSDRCU collective of warm electronics excluding HSDPUs
HSDRCU
DATA AQUISITION/COMMAND
BIAS
DATA AQUISITION/COMMAND
Type 2
Type 3
Type 4
Type 1a
Type 1
Type 1
Type 1
Type 1
HSFCU
MCU-P
MCU-R
SCU-P
SCU-R
PSU-R
PSU-P
POWER DISTRIBUTION.
28V Prime
28V Prime
HSDPU PRIME
HSDPU REDUND.
HPLCLB-P
HPLCLA-P
HPCDU PRIME
HCDMU PRIME
HCDMU REDUND.
HPCDU REDUND.
HPLCLA-R
HPLCLB-R
1553 BUS A
1553 BUS B
28V Redund.
28V Redund.
SVM Conditioned Temperature sensors on thermal strap, units, etc....outside HSFPU EMC enclosure
EGSE
KEY
Bundled together, not electrical screen
Master clock
Prime harness
Redund. harness
Herschel to Herschel/ Spire I/F lines, drawn simplified....I/Fs are all at HS connector planes
Flight Harness Identity
CAUTION This instrument block diagram shows how SPIRE units relate functionally, it is not a harness specification. The connectors happen to be labelled with the names of the fixed items on the units, not the mating harness parts.